Service Manual
Cars

Section 3 (39)
Wiring diagrams
C70/S70/V70 1999

TP 3938202

VOLVO

Cars with SRS (Air bag)/SIPS bag

Warning!
Cars equipped with a Supplemental Restraint System (SRS)/SIPS bag must be treated extra carefully when repairs are being made. This is to help prevent:
1. Injuries when carrying out a repair.
2. Damage or malfunction of the SRS/SIPS bag system. Repair to either the SRS/SIPS bag itself or a related system or component must be carried out by an authorized Volvo workshop. Refer to the appropriate SRS and SIPS bag service manual for complete system information.

Is the car equipped with SRS?
Cars with SRS are most easily recognized by the SRS letters on the steering wheel pad. If the car is also equipped with an air bag on the passenger side, the letters 'SRS' will be embossed on the instrument panel above the glove compartment. On models from 1993 on, cars with SRS will also be equipped with pyrotechnical seat belt tensioners in the B-posts.
The SIPS bags are only installed in cars equipped with SRS systems, 1995-. Cars with SIPS bags can be recognized by the identifying labels on the windshield and on seat storage tray.

Dashboard or around steering column
Take care to avoid the SRS wiring being pinched, frayed or pierced by screws when working on the firewall, knee bolster, ignition switch, steering column casings, glove compartment, instrument panel, door sills and B-posts.

Center console
The SRS collision sensor is located between the handbrake and gear lever (selector) in the center console. Never install accessories on or near the sensor.

Repairs to steering gear and column
When carrying out repairs to the steering wheel, steering gear or column always follow the repair procedures given in the appropriate SRS service manual.Read the relevant section! The contact reel in the steering column will be damaged if the steering wheel is turned more than three turns in either direction.

Seats
The SIPS bag sensor is located in the front section of the seat storage tray. The SIPS-bag can be activated by a blow or pressure on the tray or if an object is caught between the tray and the door when the door is closed. Refer to the SIPS bag Service manual when carrying out work on the front seats.

Test terminal
Data Link Connector socket in passenger compartment.

Modifications introduced up to and including August 1998
Any modifications made to the car after this are not included in this book.
Refer to the Service Bulletins if necessary.

Volvos are sold in versions adapted for different markets. These adaptations depend on many factors including legal, taxation and market requirements.
This manual may therefore show illustrations and text which do not apply to cars in your country.

Contents

Continued on next page

Order number TP 3938202
Supersedes book TP 3938201

Contents

Radio
C70 Convertible

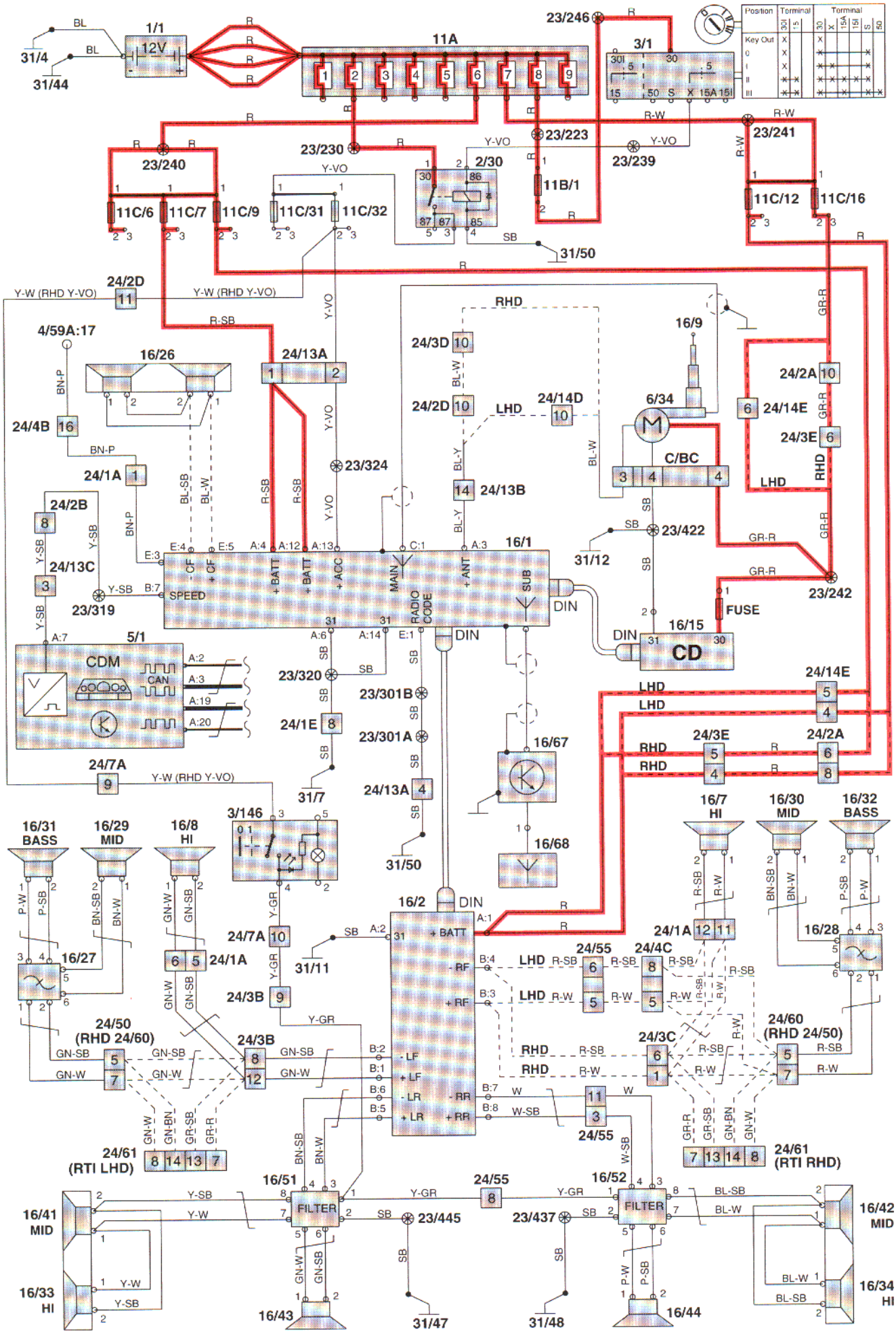

Radio
C70 coupé

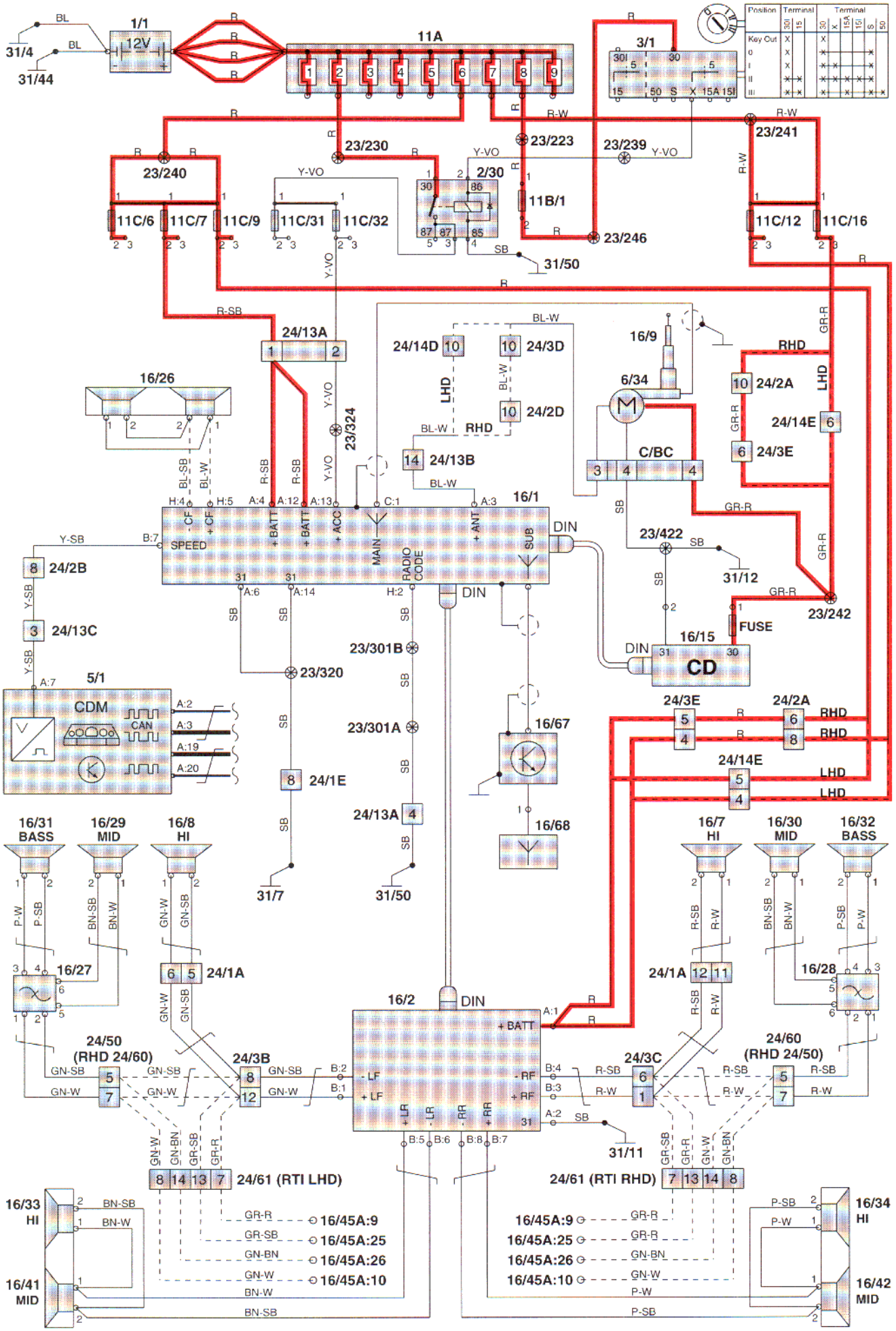

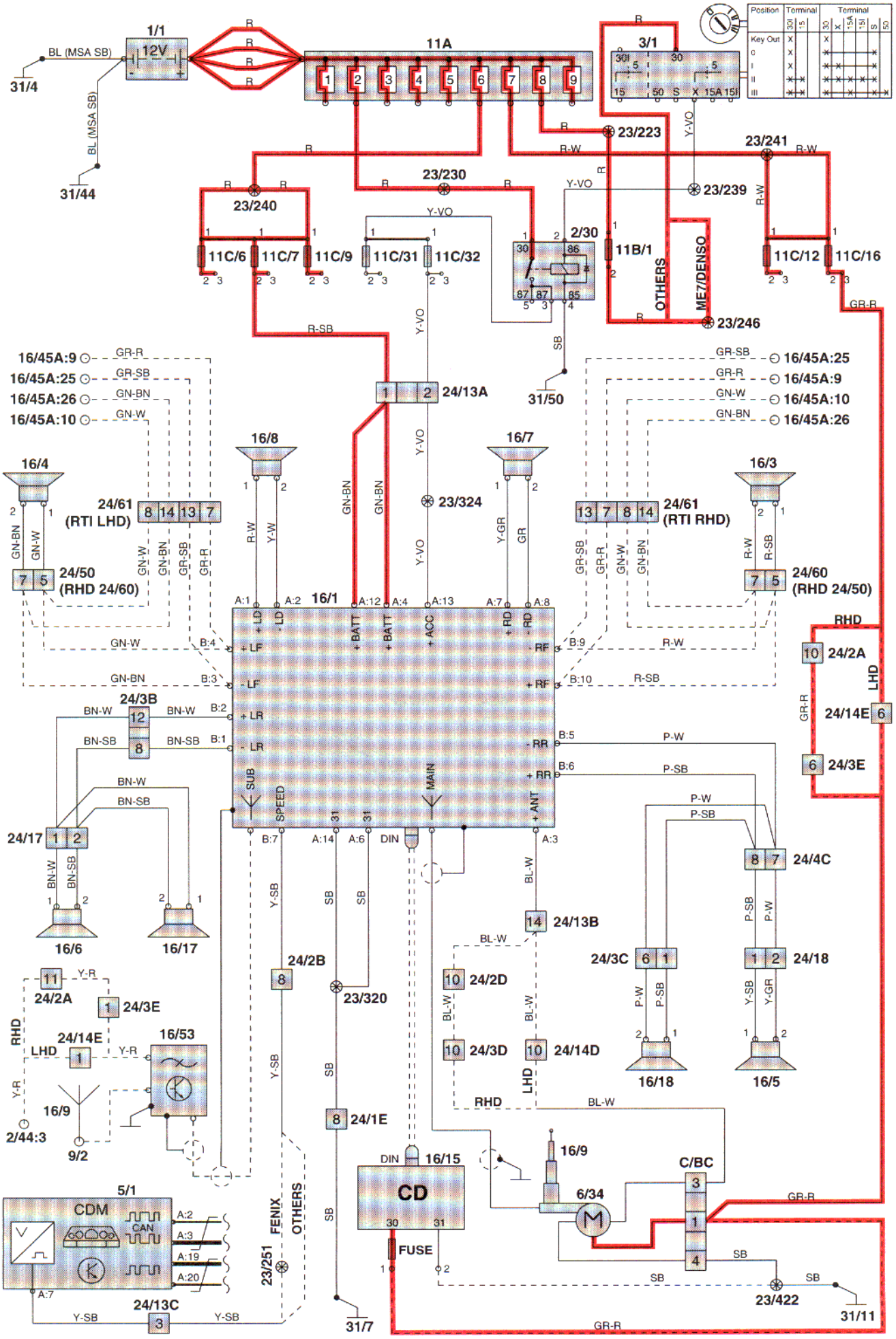
1/1
12V
BL (MSA SB)
31/4
31/44
11A
3/1
Position
Terminal
Key Out
23/223
23/241
23/230
23/240
23/239
2/30
11C/6
11C/7
11C/9
11C/31
11C/32
11B/1
OTHERS
ME7/DENSO
11C/12
11C/16
23/246
31/50
24/13A
16/45A:9
16/45A:25
16/45A:26
16/45A:10
16/8
16/7
16/4
16/3
24/61 (RTI LHD)
24/61 (RTI RHD)
23/324
24/50 (RHD 24/60)
24/60 (RHD 24/50)
16/1
24/3B
24/17
16/6
16/17
24/2A
24/3E
24/14E
16/53
16/9
2/44:3
9/2
24/2B
23/320
24/1E
24/13B
24/2D
24/3D
24/14D
24/3C
24/4C
24/18
16/18
16/5
RHD
LHD
16/15
CD
FUSE
6/34
C/BC
23/422
31/11
31/7
5/1
CDM
CAN
FENIX
23/251
24/13C

Radio
V70

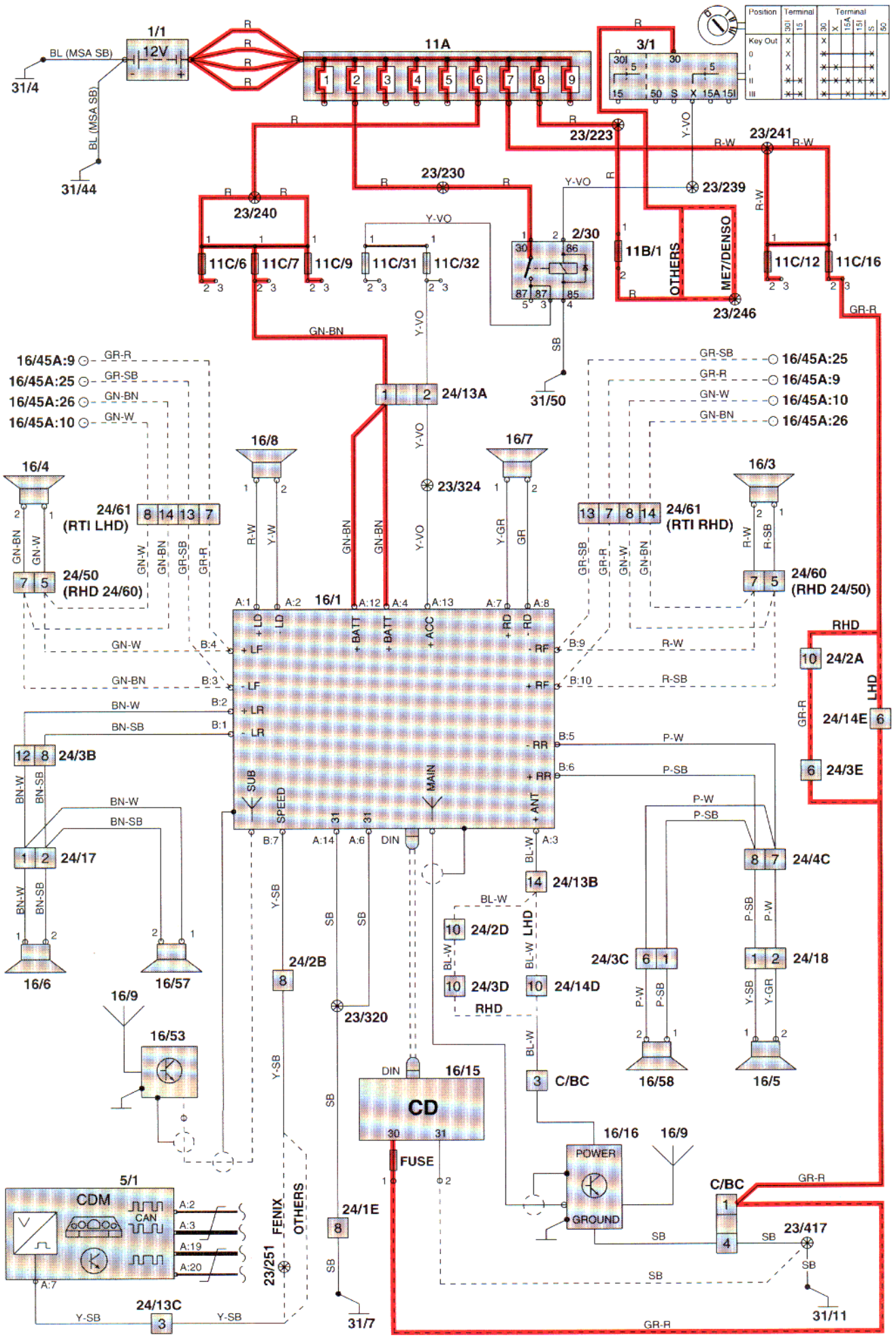
1/1
12V
BL (MSA SB)
31/4
31/44
11A
3/1
Position
Terminal
Key Out
23/223
23/241
23/230
23/239
23/240
11C/6
11C/7
11C/9
11C/31
11C/32
2/30
11B/1
OTHERS
ME7/DENSO
23/246
11C/12
11C/16
GR-R
GN-BN
Y-VO
SB
31/50
24/13A
16/45A:9
16/45A:25
16/45A:26
16/45A:10
GR-SB
GN-W
16/8
16/7
16/4
16/3
23/324
24/61 (RTI LHD)
24/61 (RTI RHD)
24/50 (RHD 24/60)
24/60 (RHD 24/50)
16/1
RHD
LHD
24/2A
24/14E
24/3E
24/3B
24/17
16/6
16/57
24/4C
24/13B
24/2D
24/3D
24/14D
24/3C
24/18
16/58
16/5
24/2B
23/320
16/9
16/53
16/15
CD
FUSE
C/BC
16/16
POWER
GROUND
23/417
31/11
5/1
CDM
CAN
FENIX
23/251
24/1E
31/7
24/13C

Radio with 4x50 W extra amplifier
S70

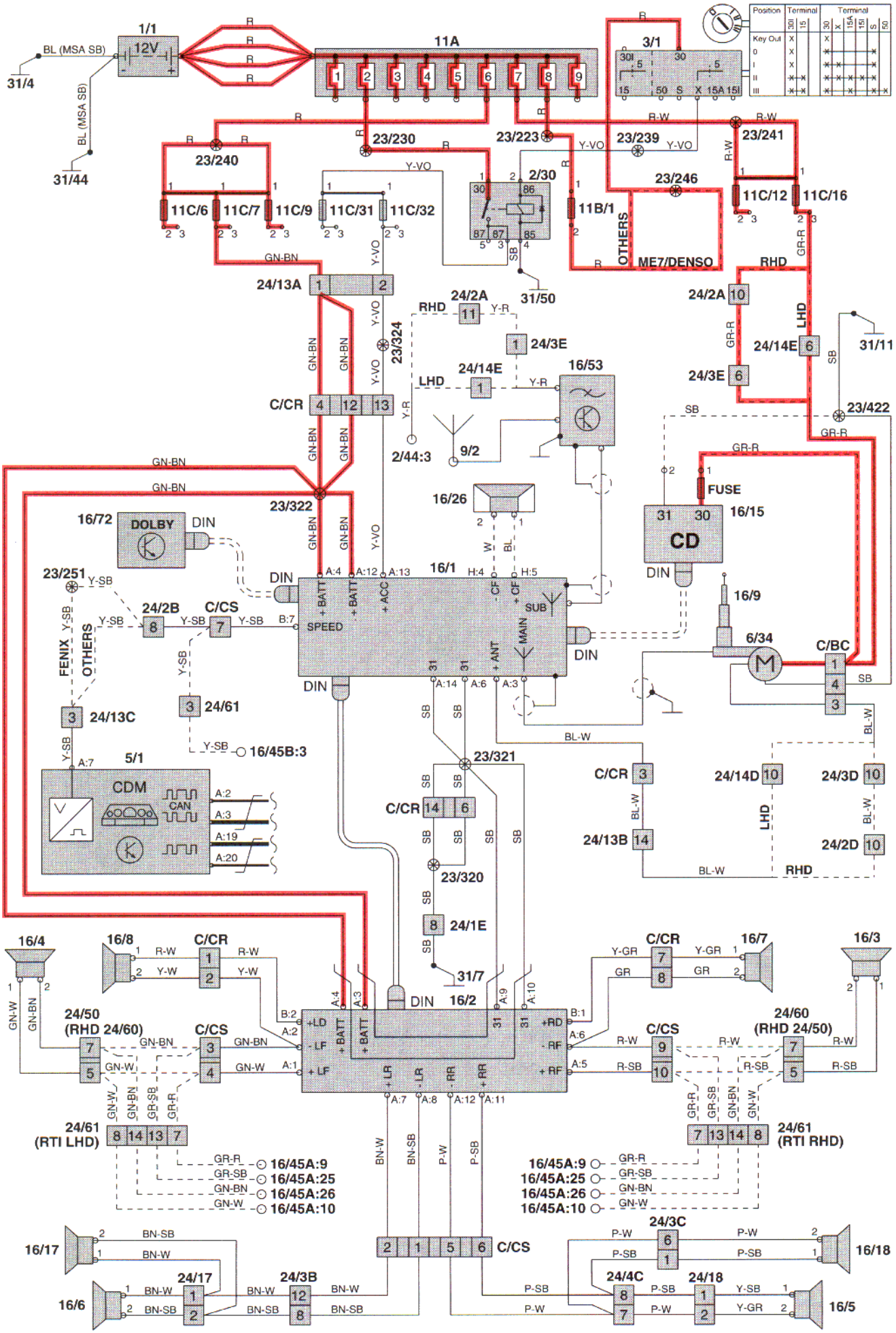

Radio with 4x50 W extra amplifier
V70

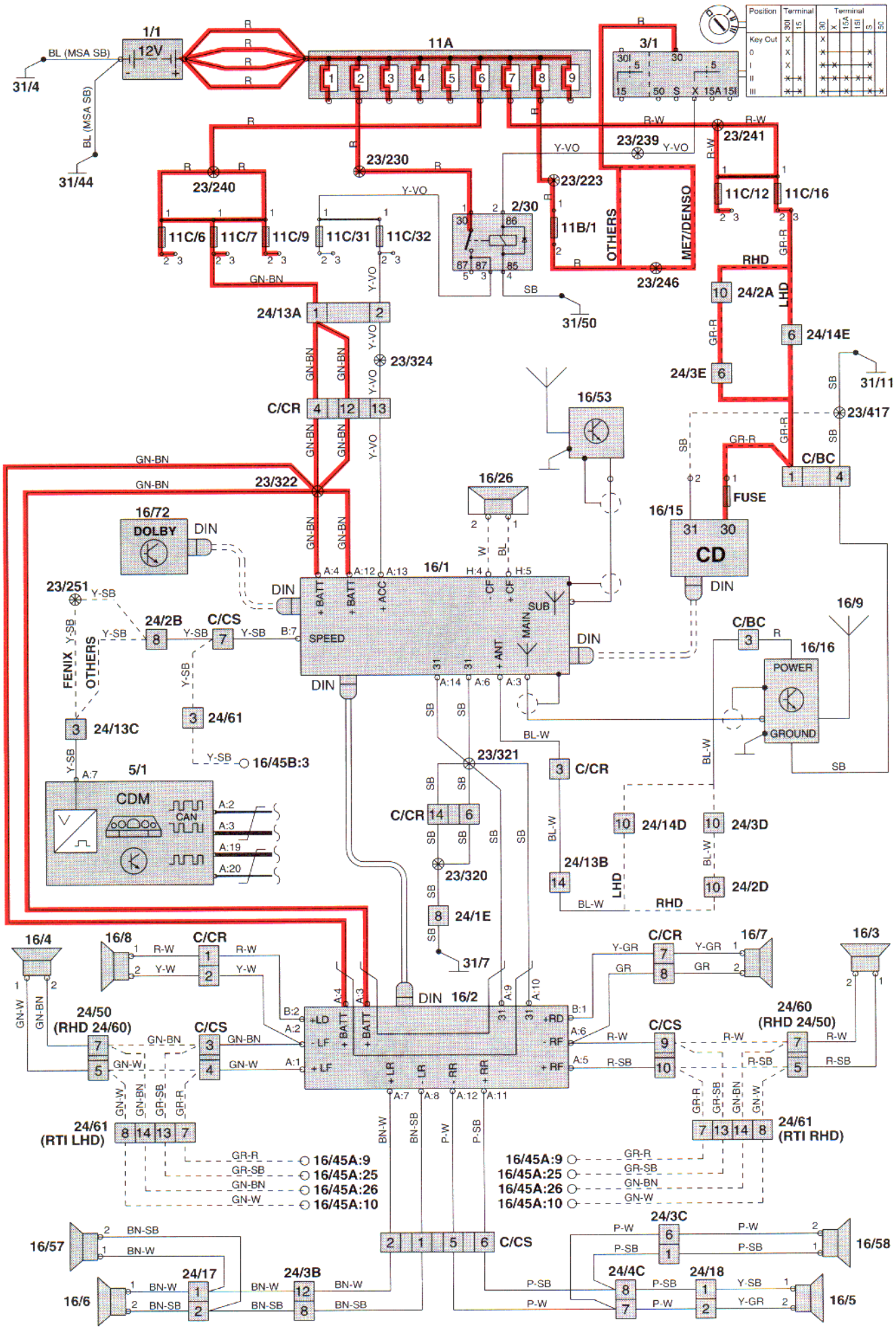

RTI Road Traffic Information
C70

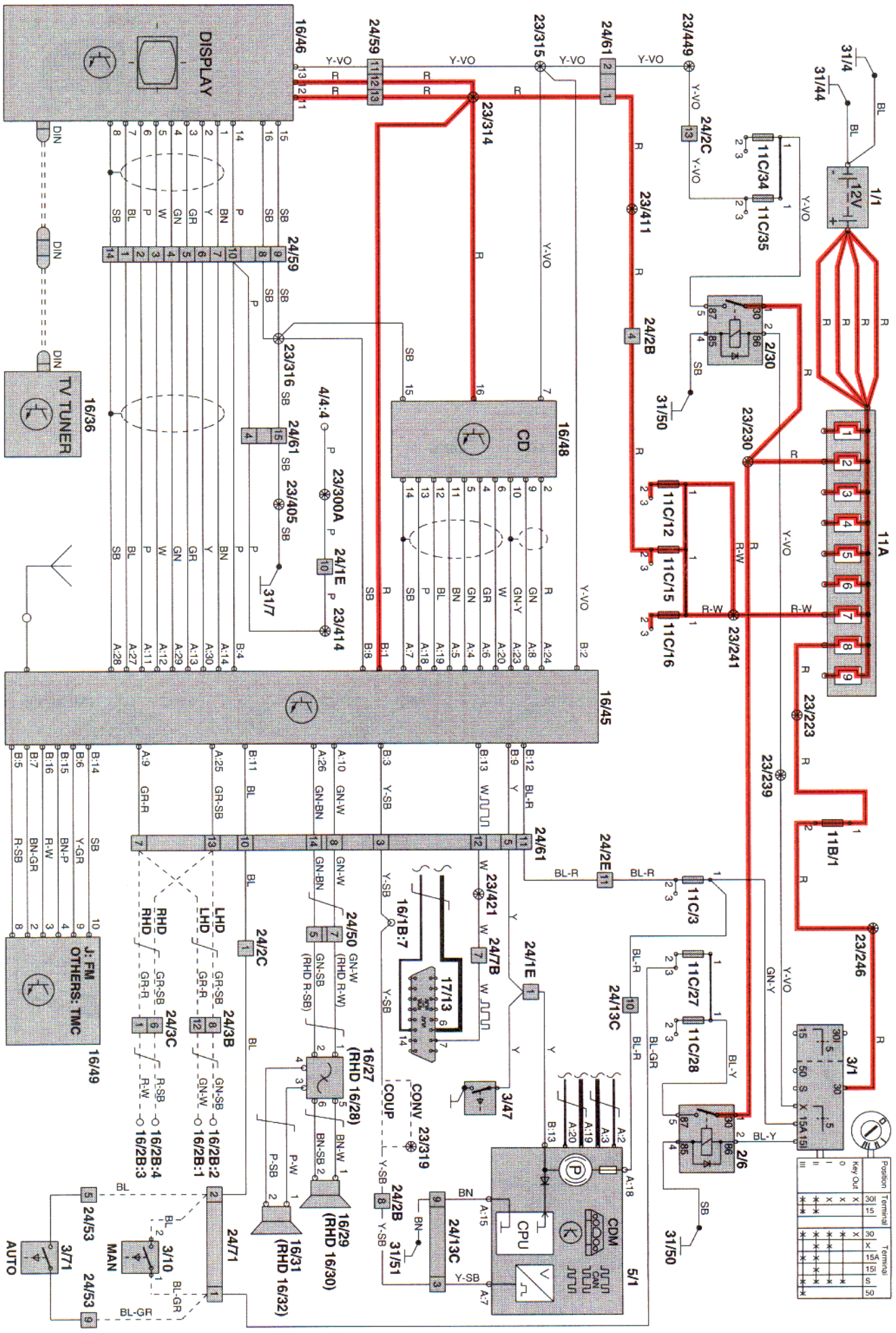

RTI Road Traffic Information
S70, V70

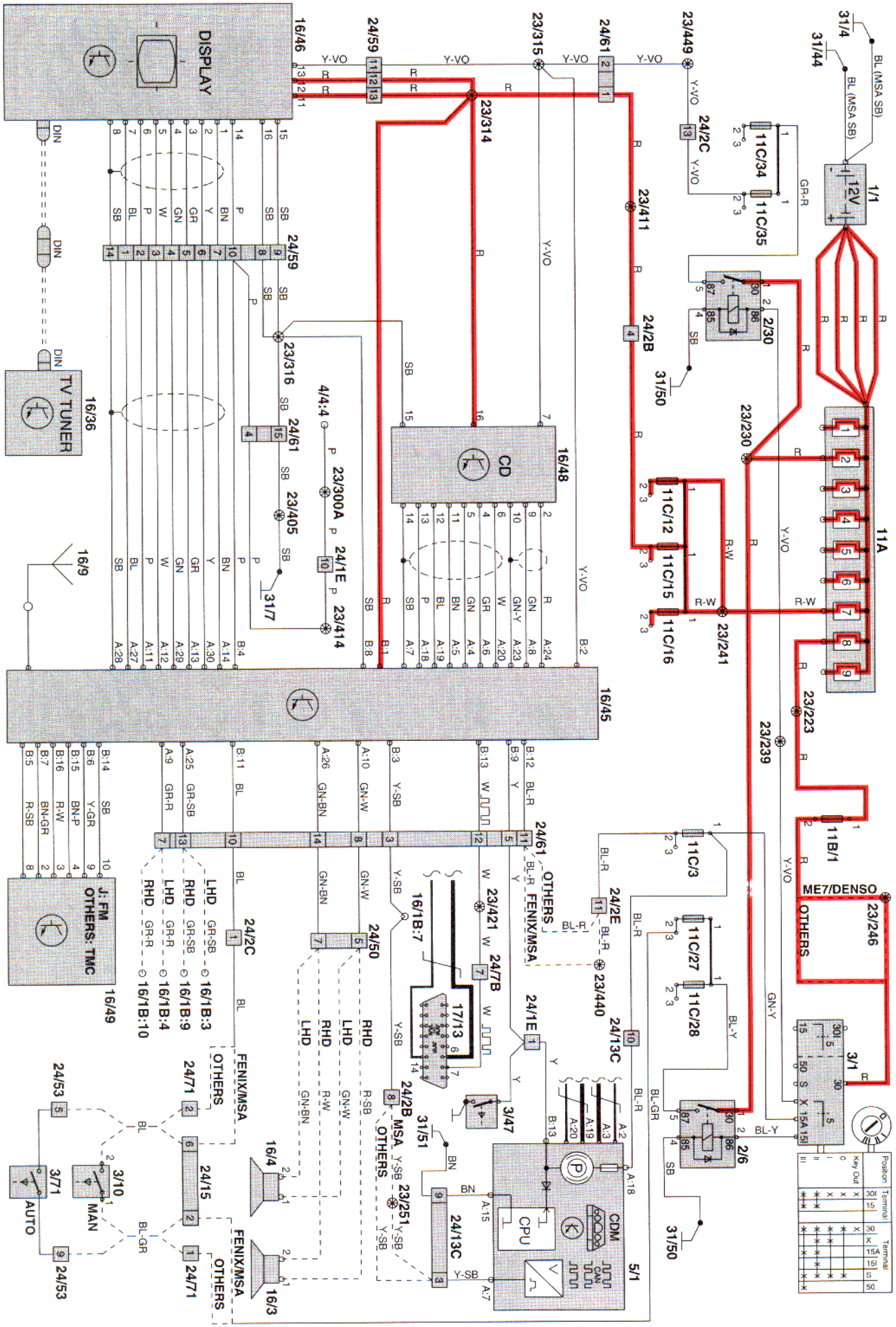

Electronically controlled automatic transmission AW 50-42
Fenix 5.2, MSA 15.7

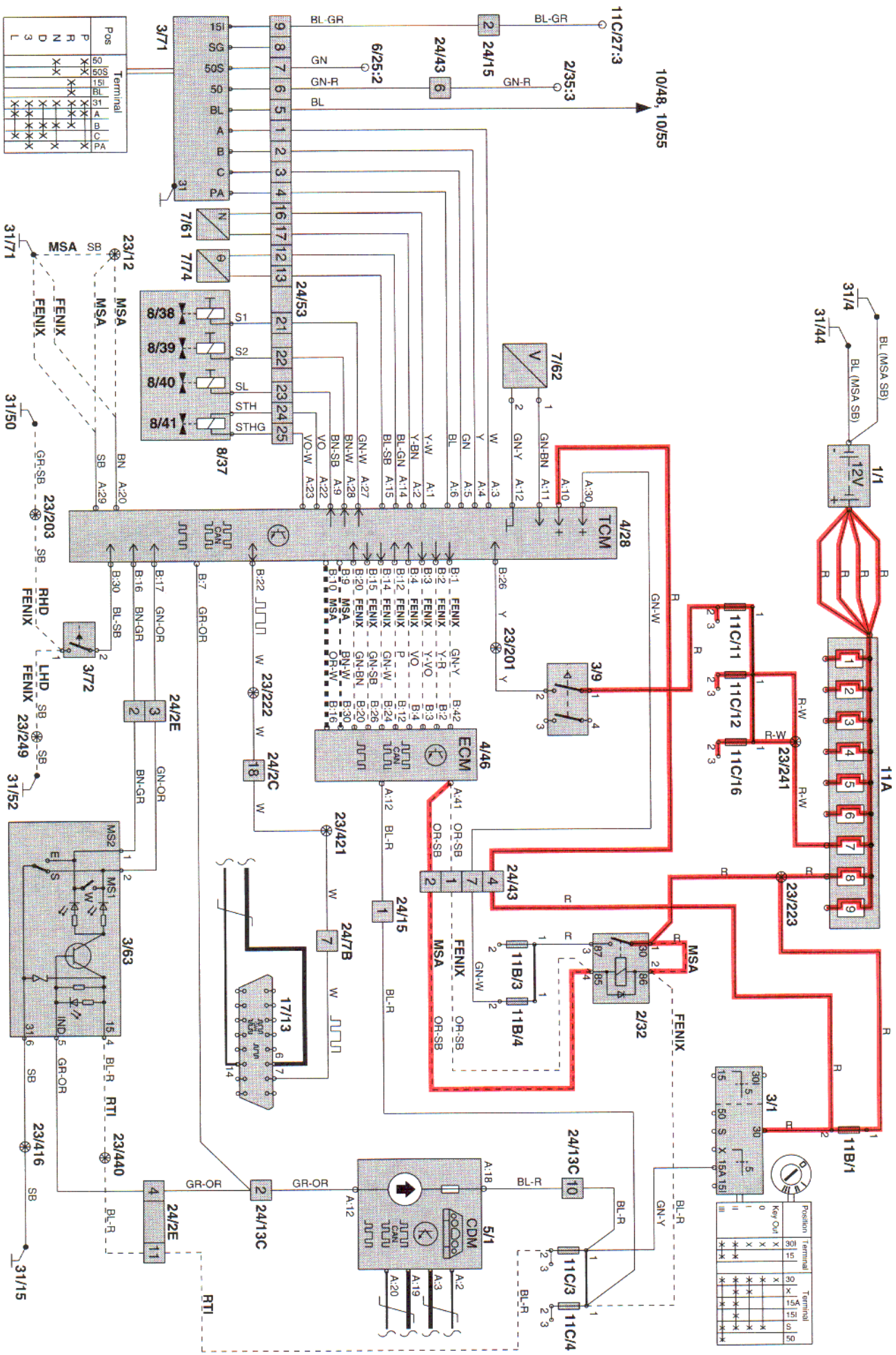

Electronically controlled automatic transmission AW 50-42
Denso, ME7

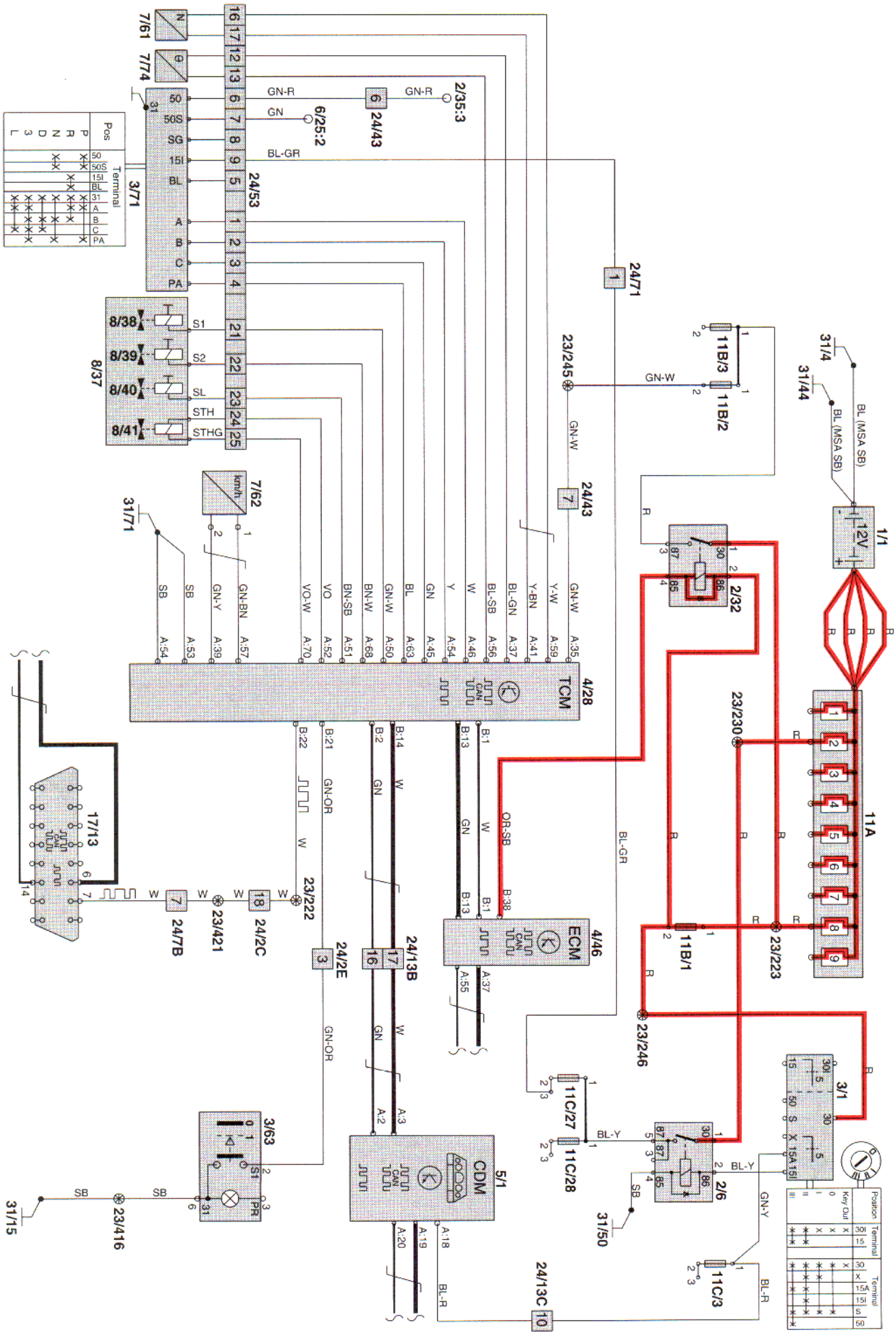

P-shift lock, automatic transmission

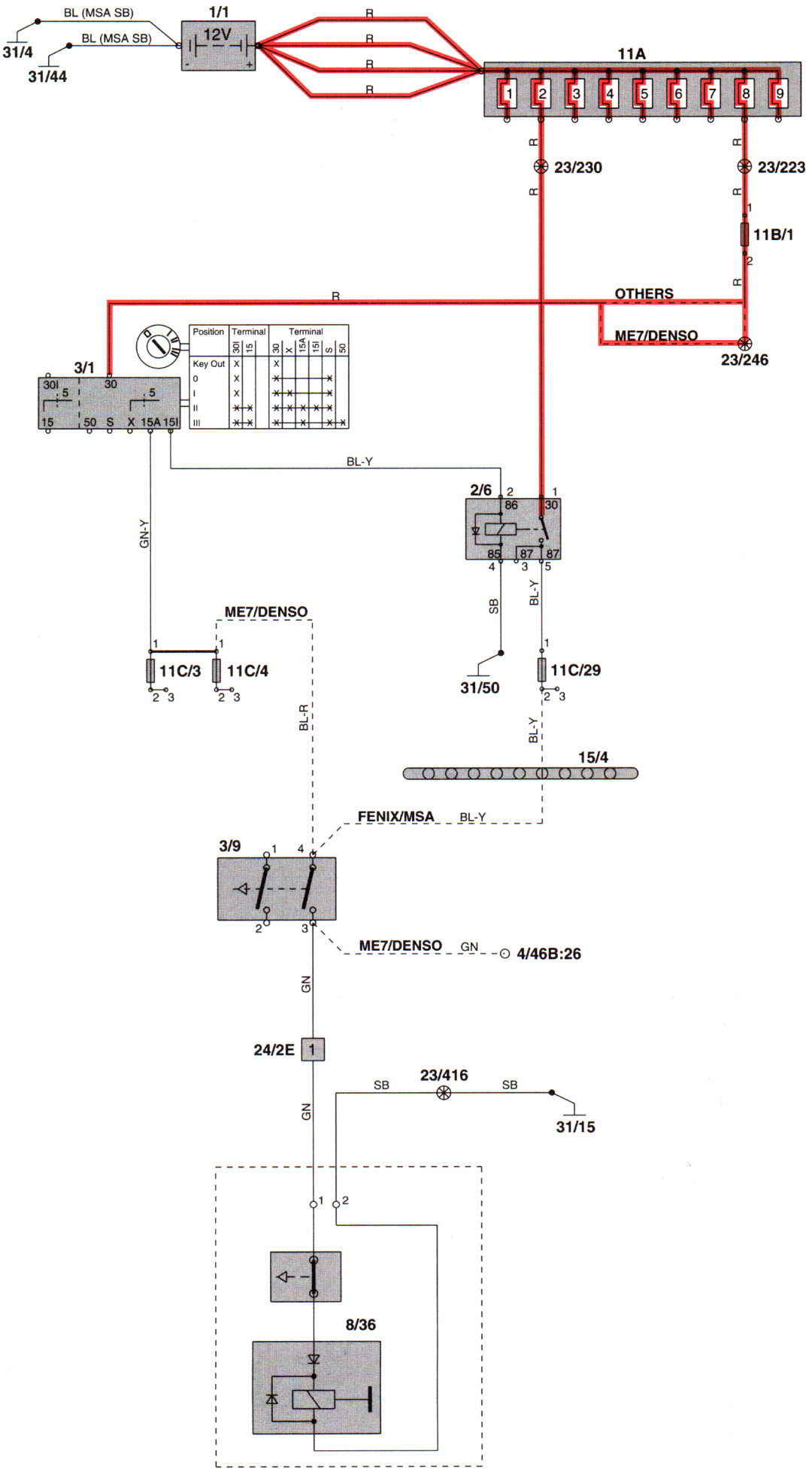

ABS Anti-lock braking system

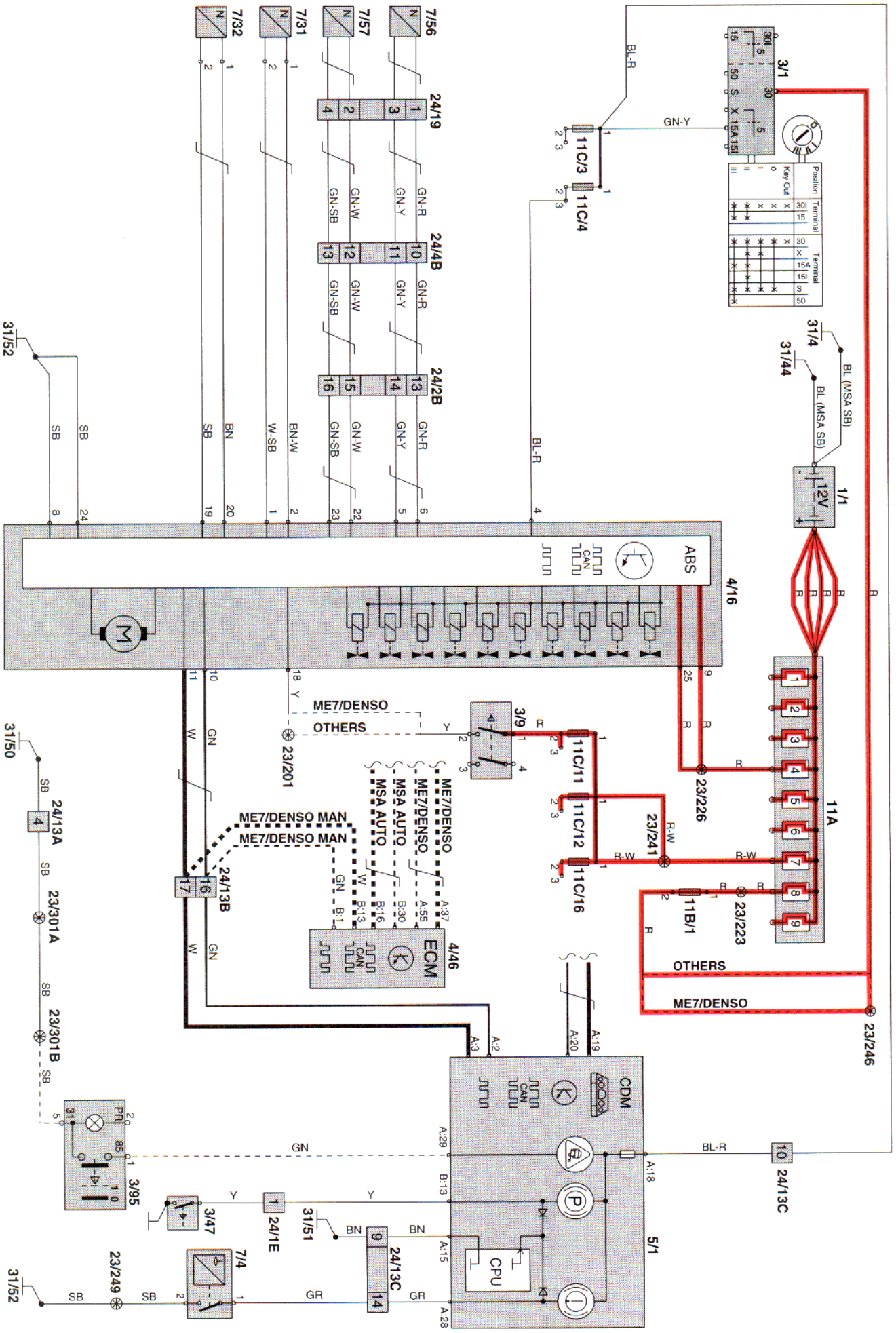

Central locking
C70 Convertible

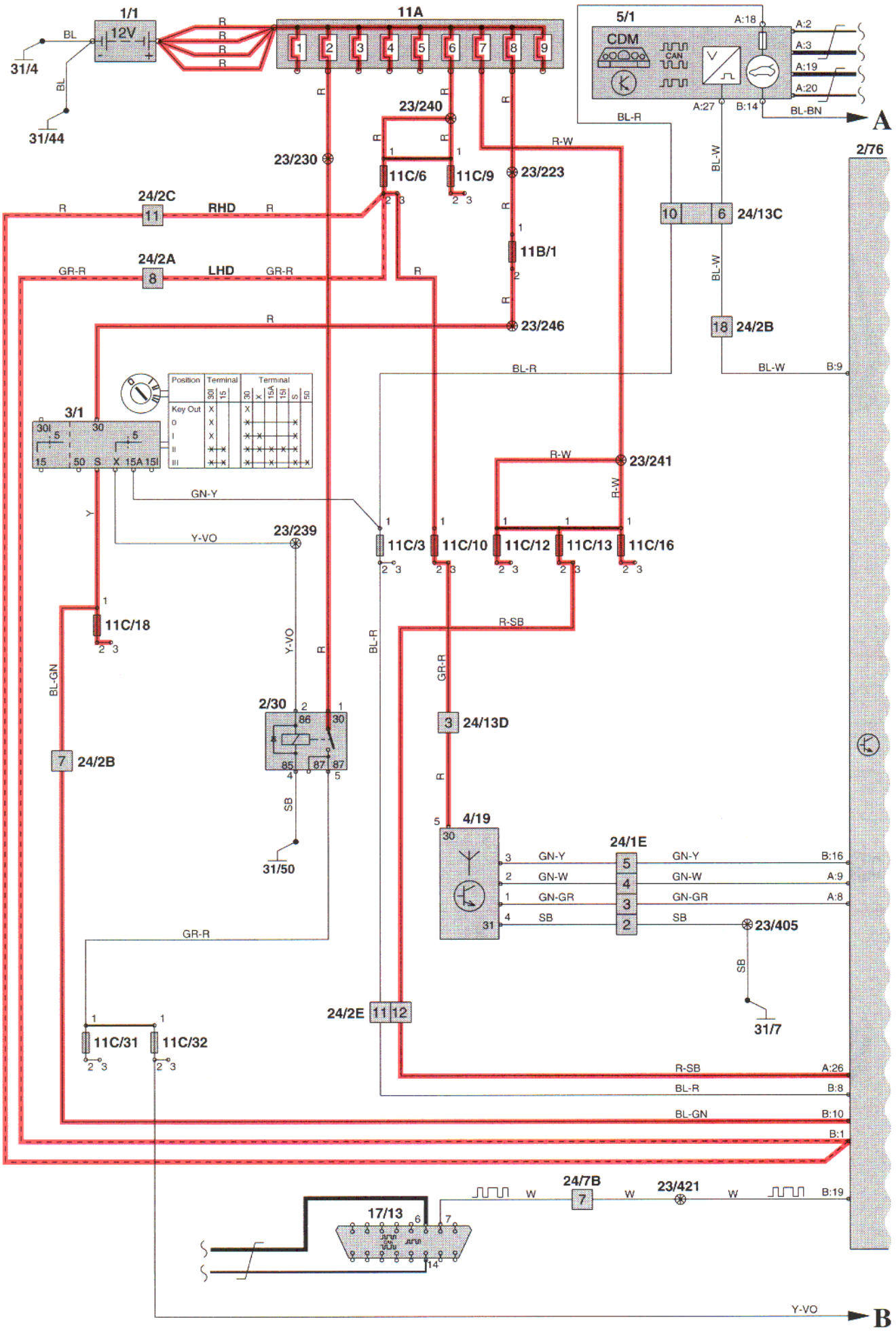

Central locking
C70 coupé

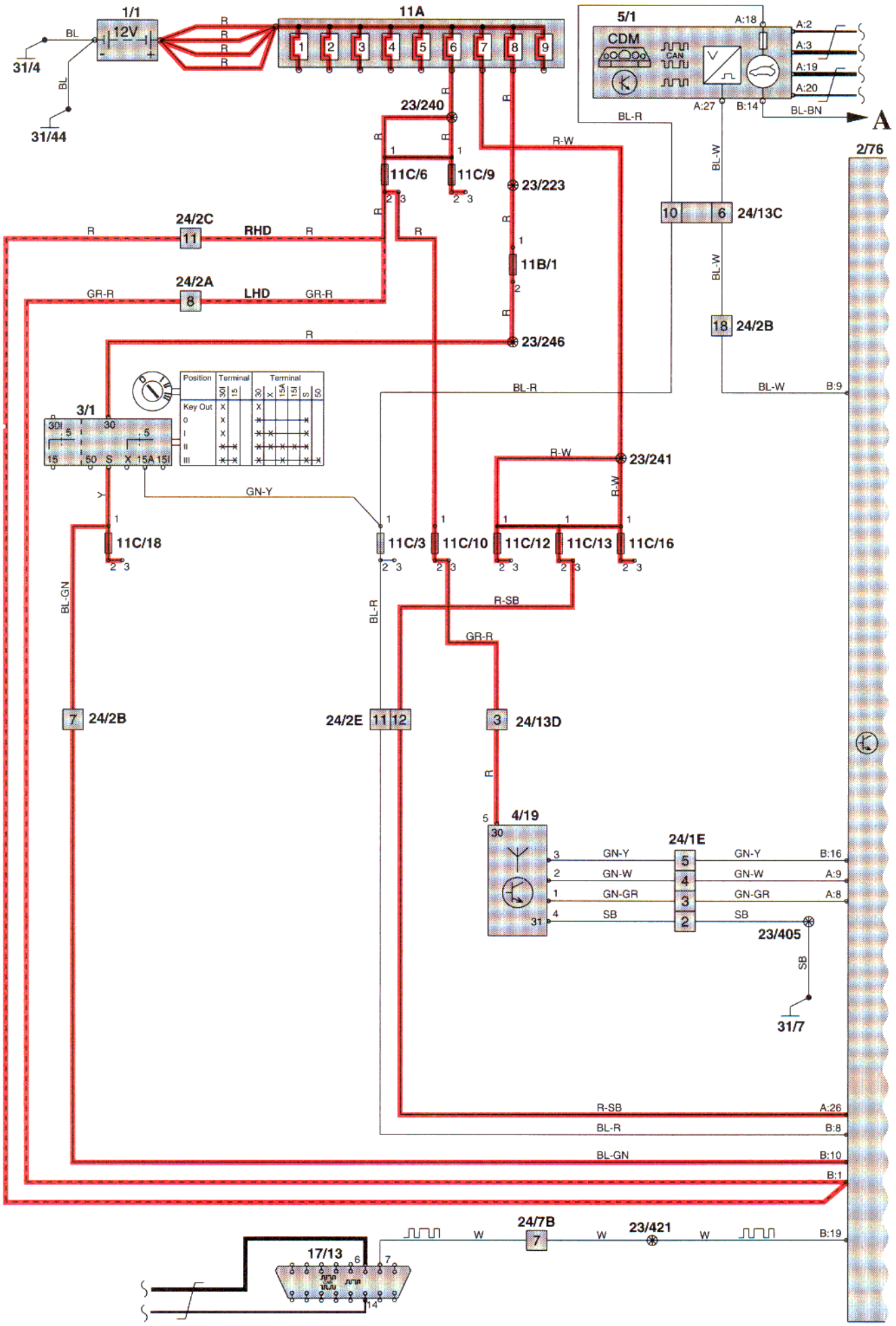

Central locking
S70

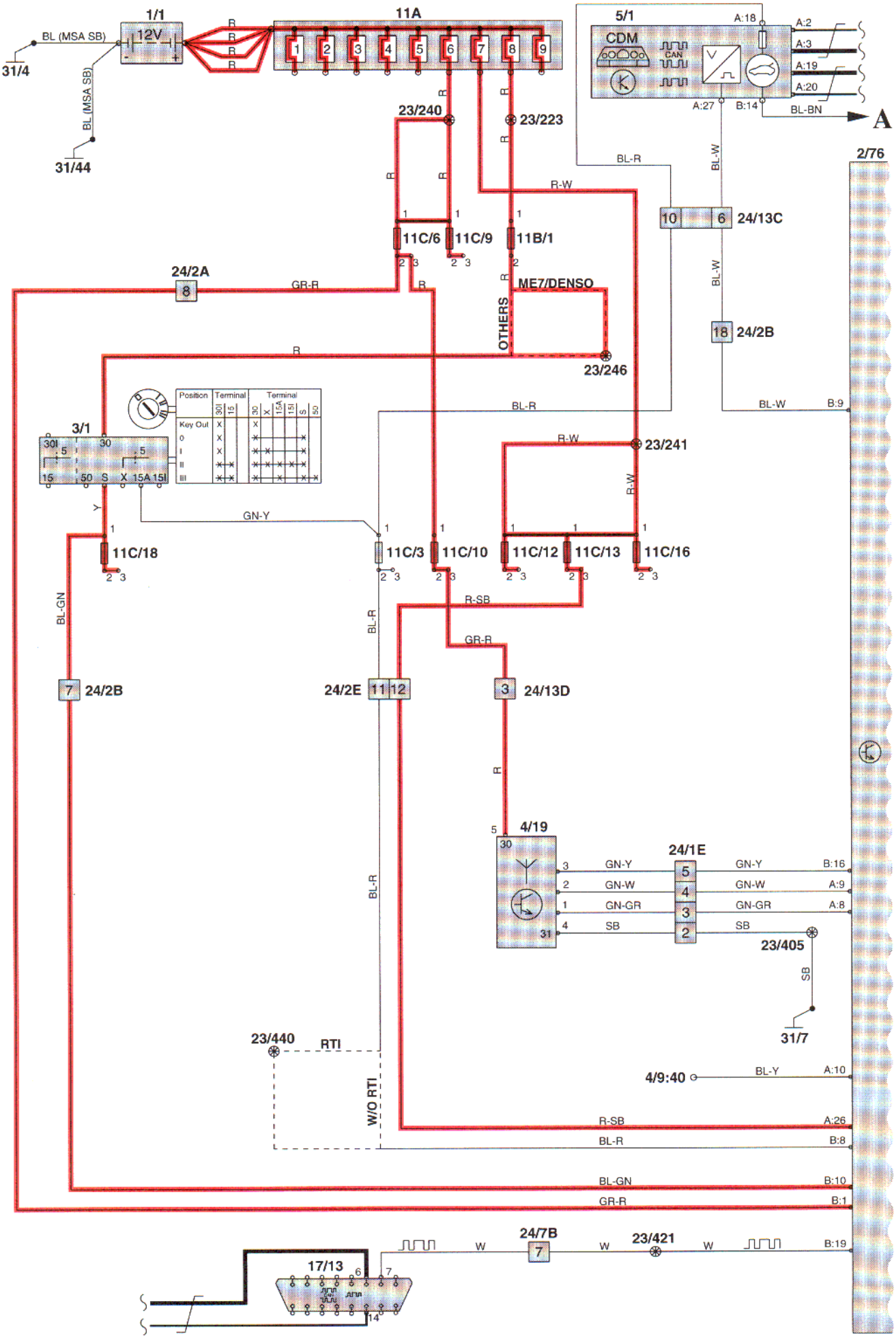

Central locking
V70

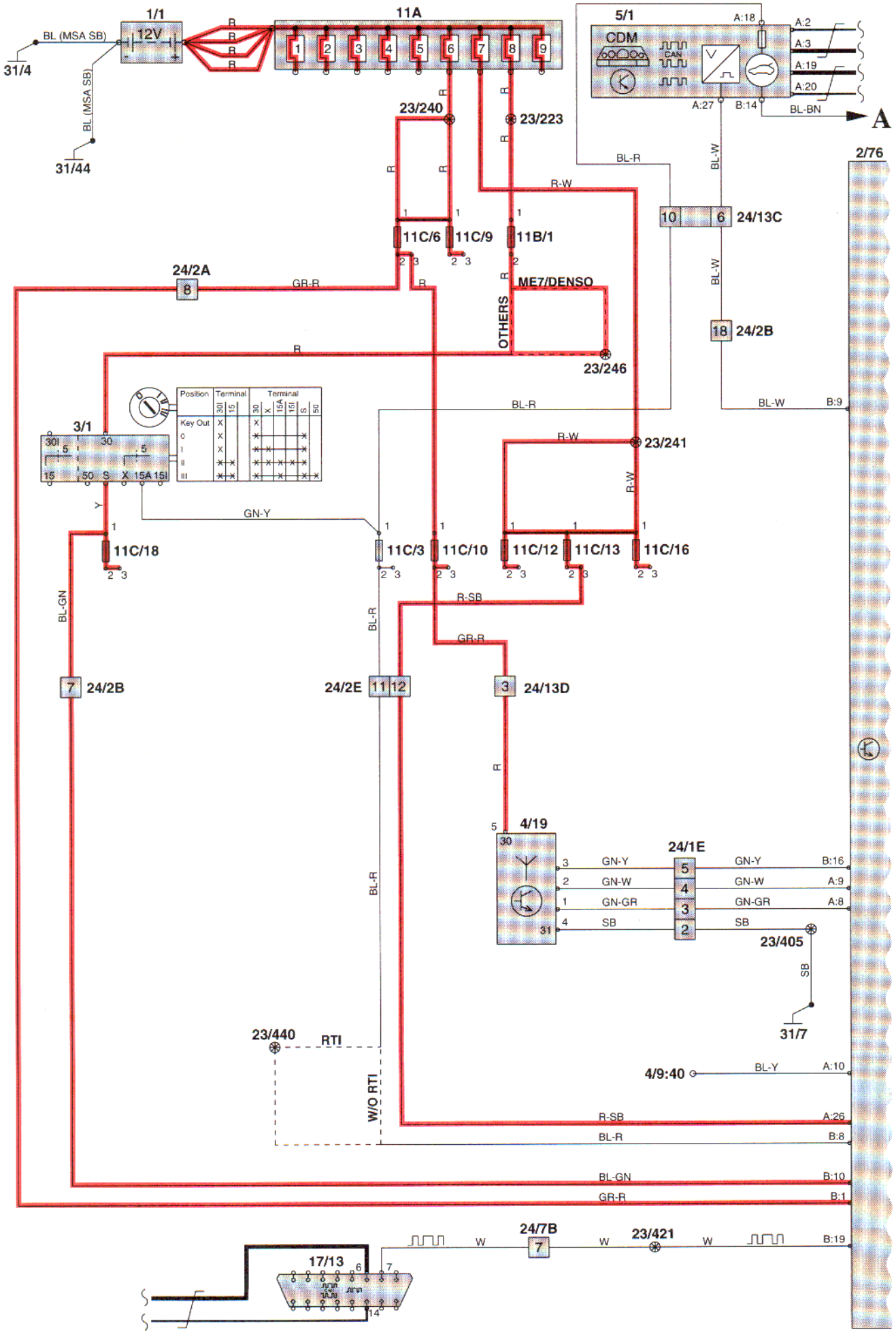

Soft top operation

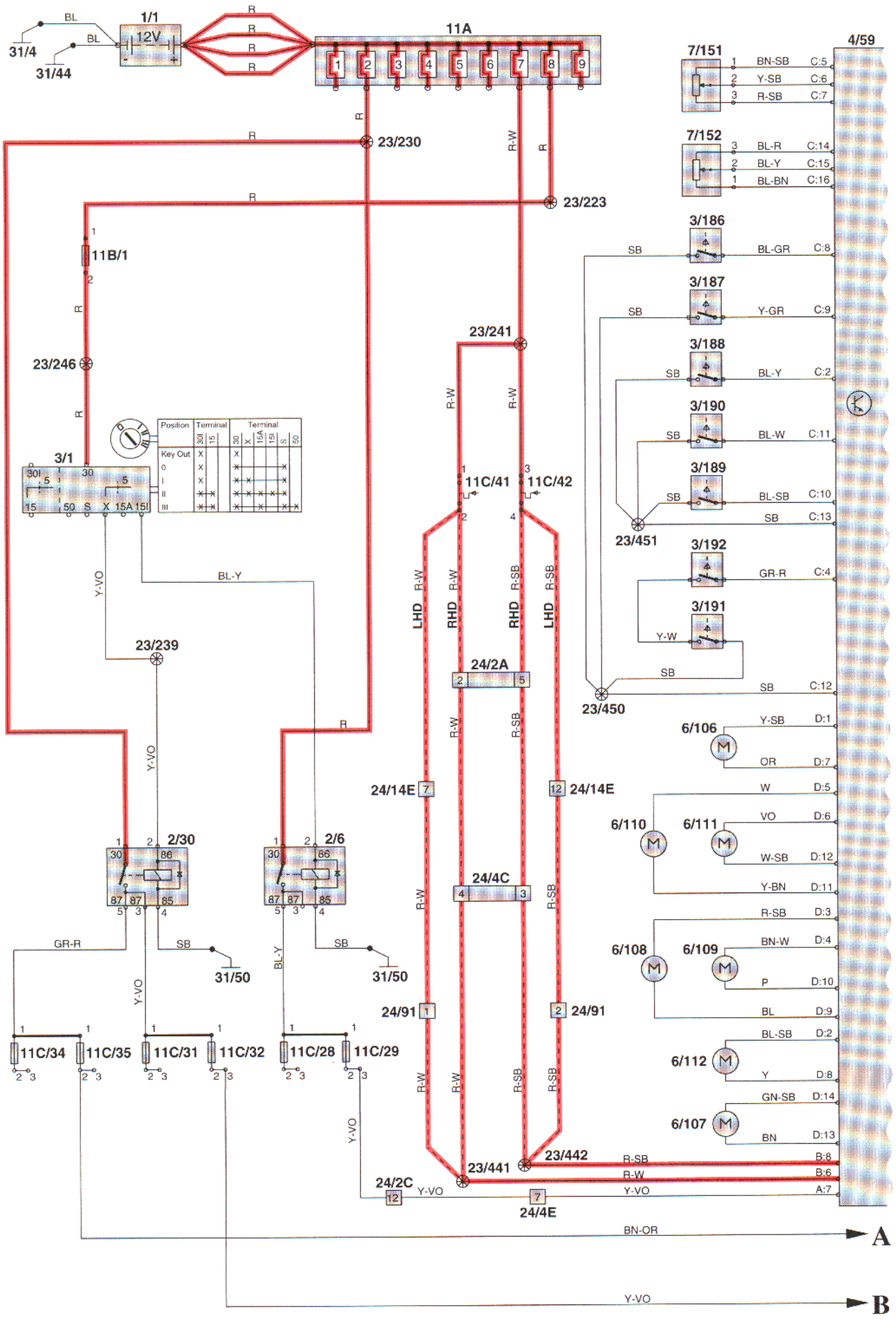

Power windows
C70 Convertible

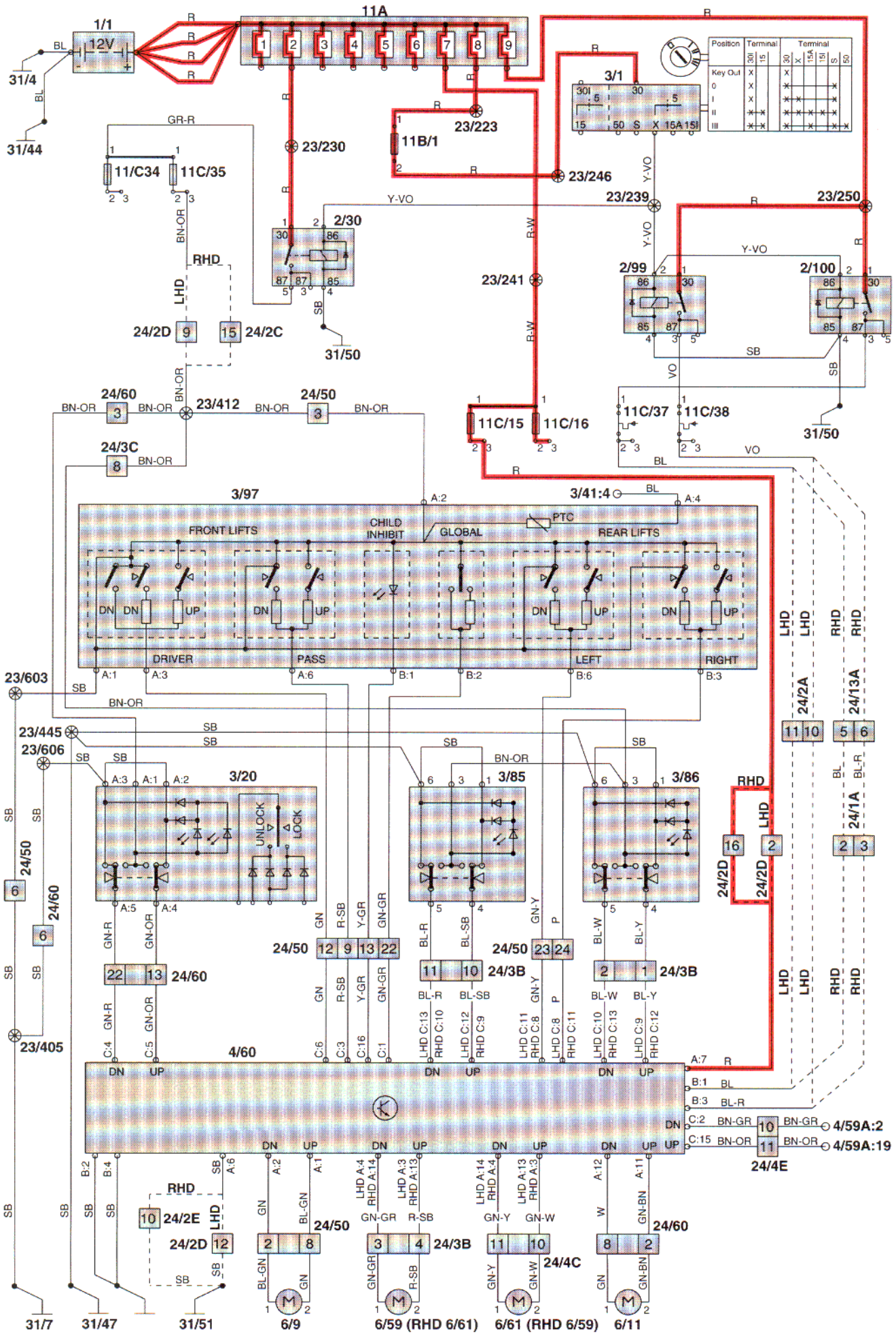

Power windows
C70 coupé

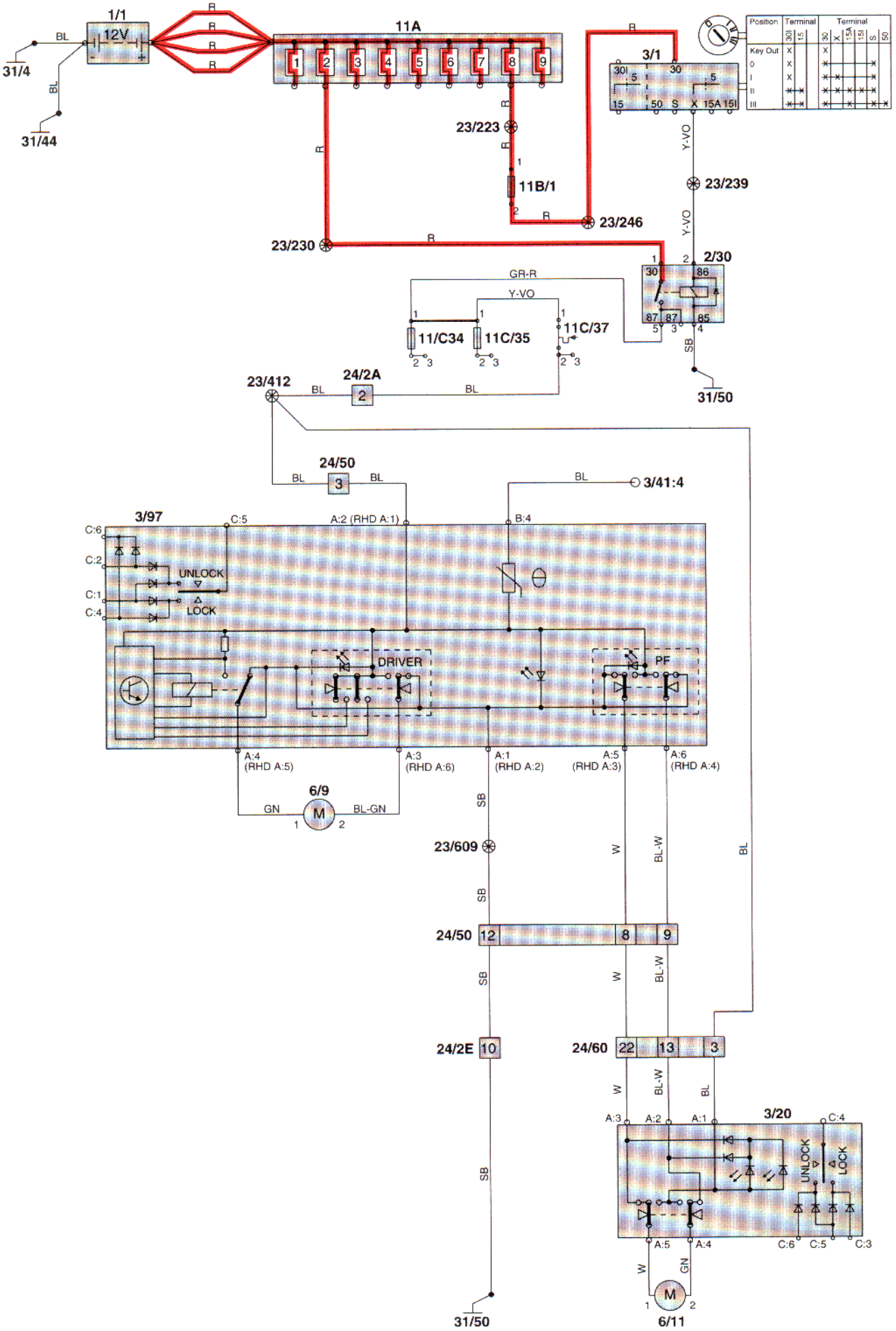

Power windows
S70, V70

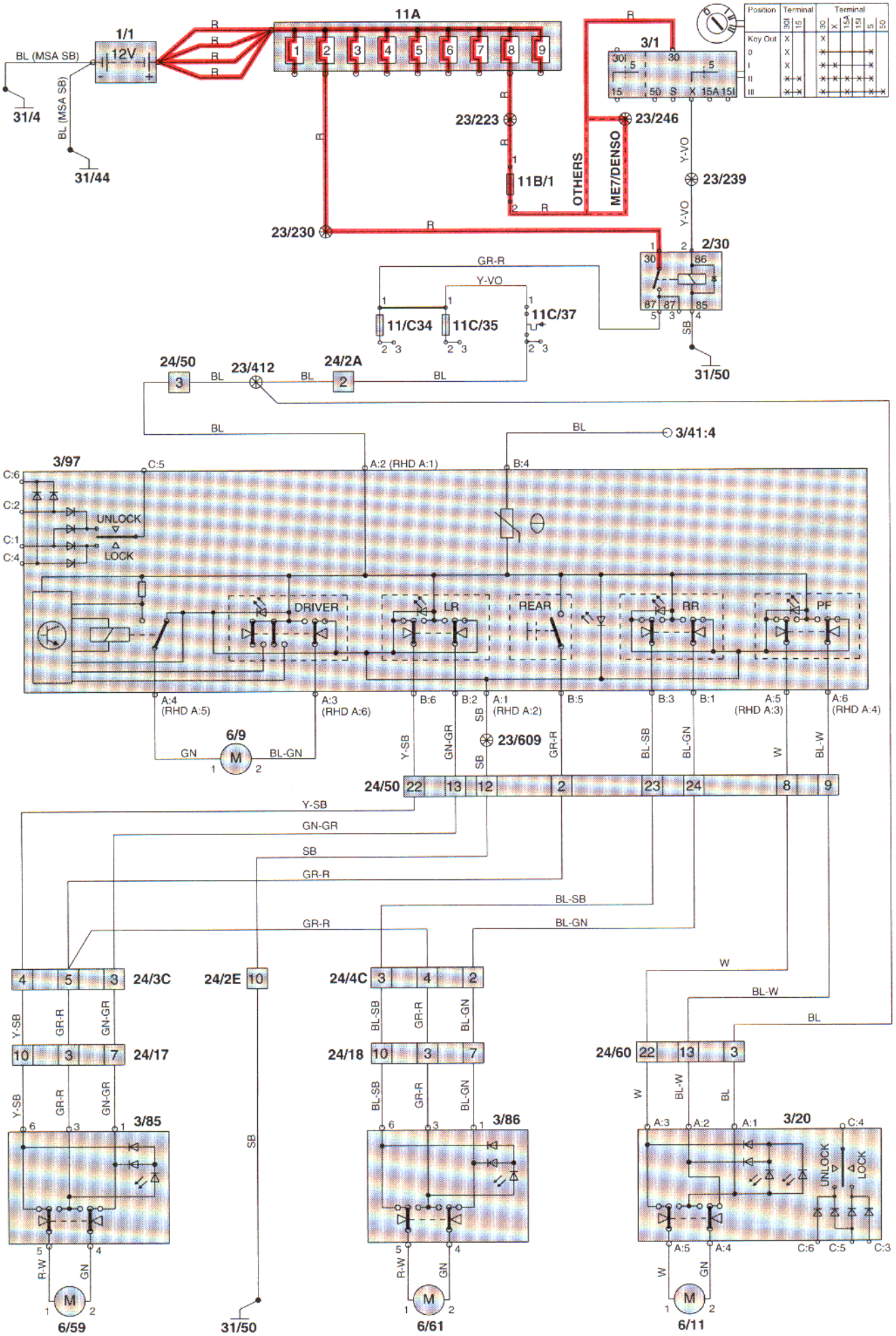

Power sunroof

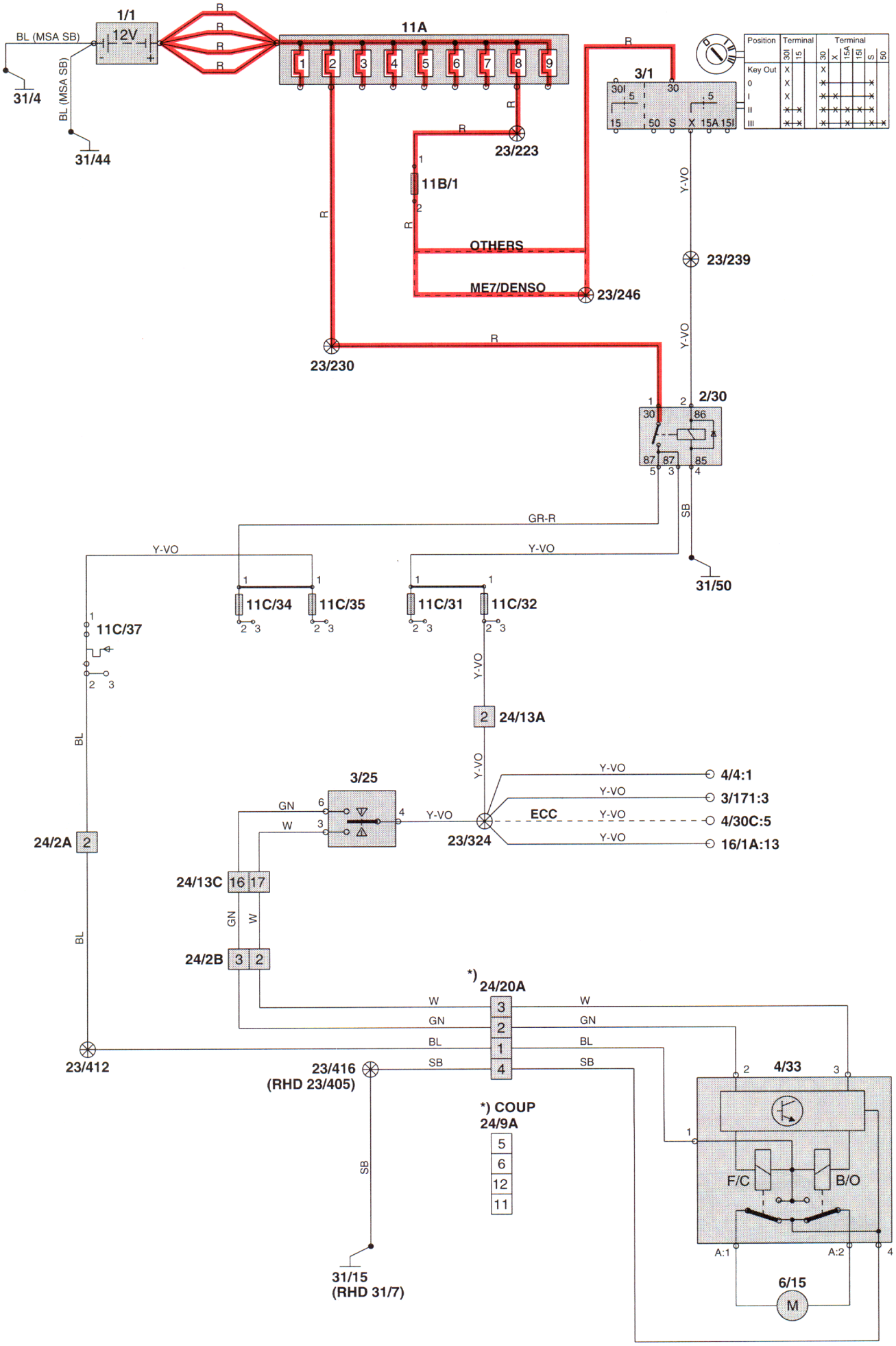

Heated rear window and heated door mirrors
C70 Convertible

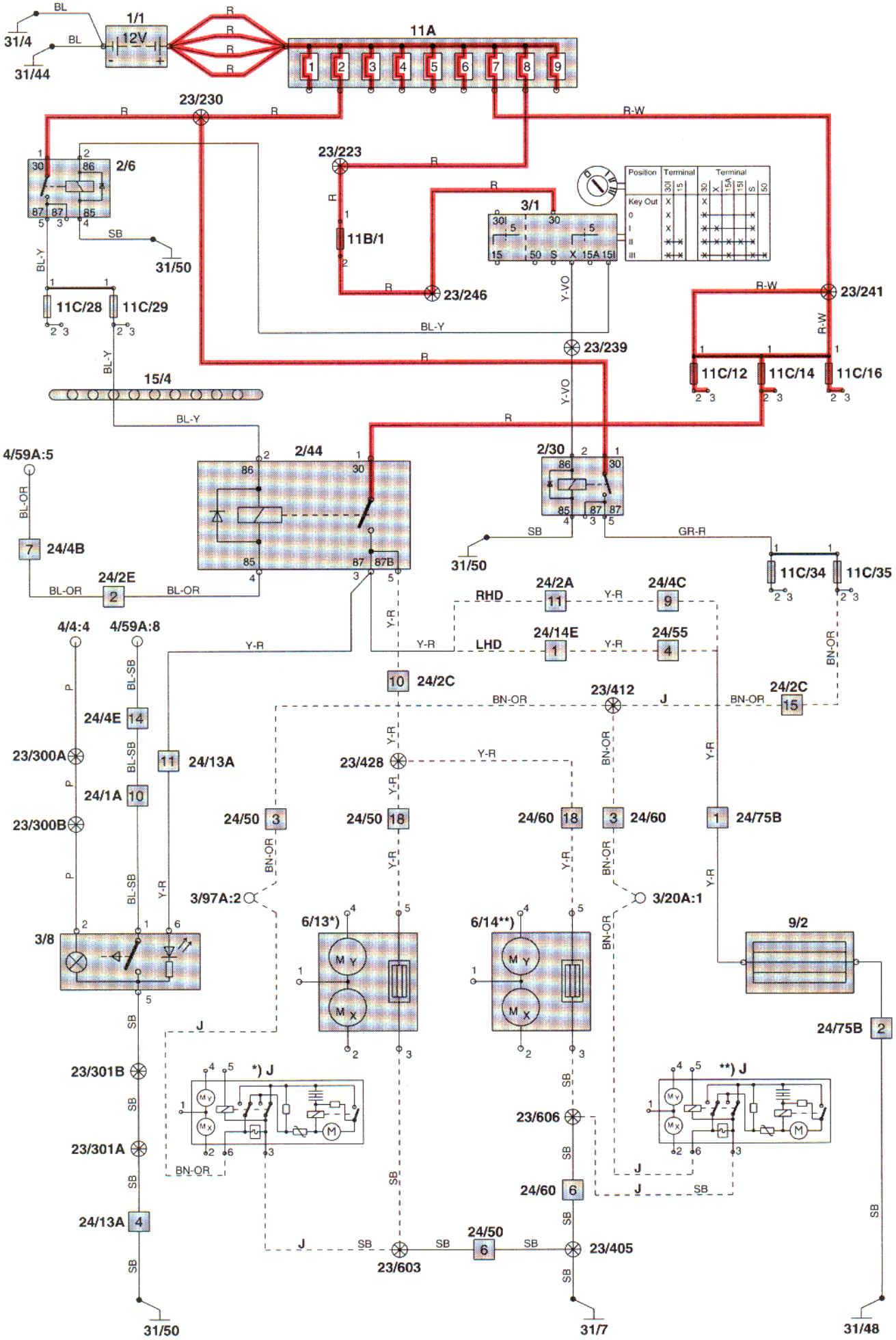

Heated rear window and heated door mirrors
C70 coupé, S70, V70

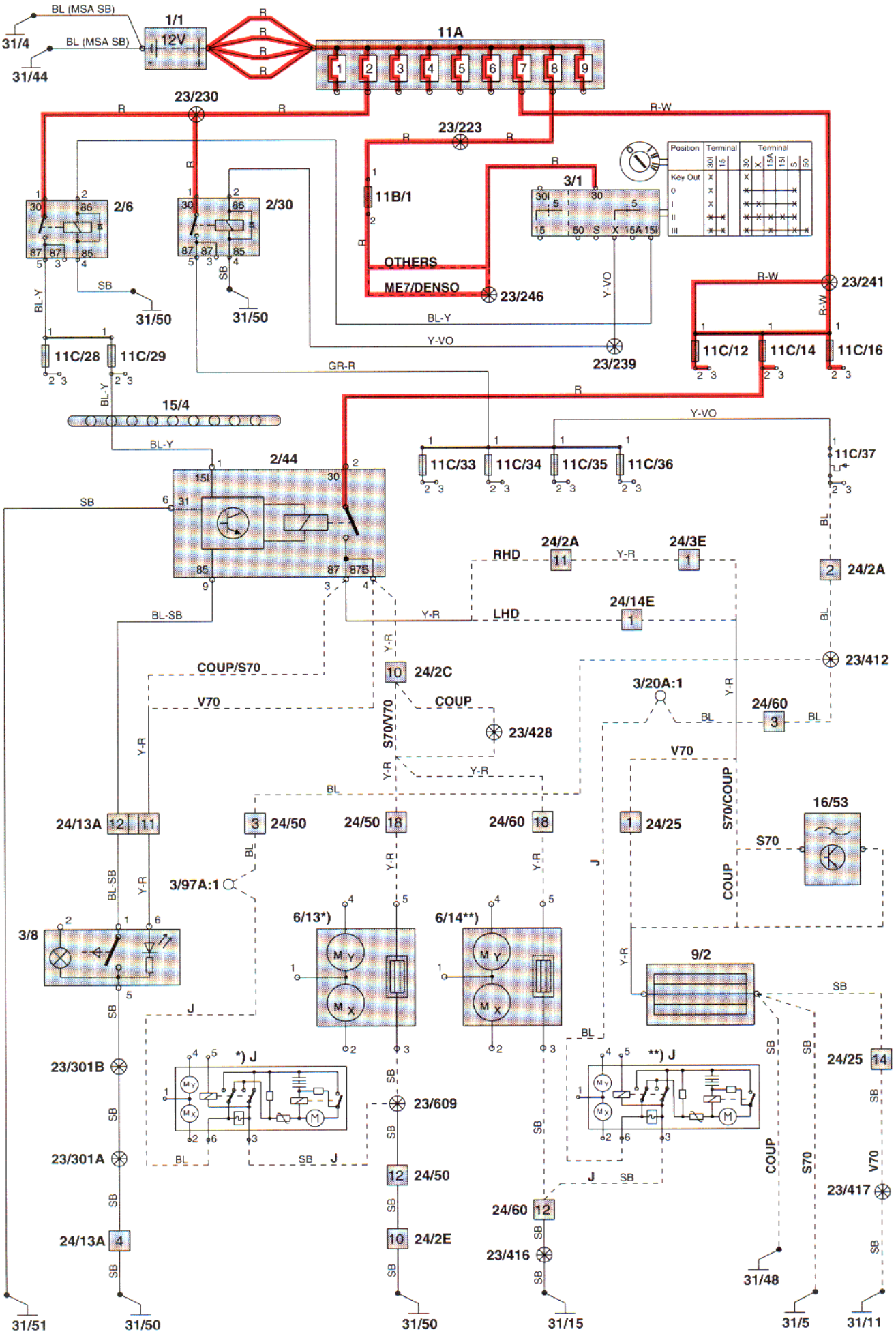

Power door mirrors

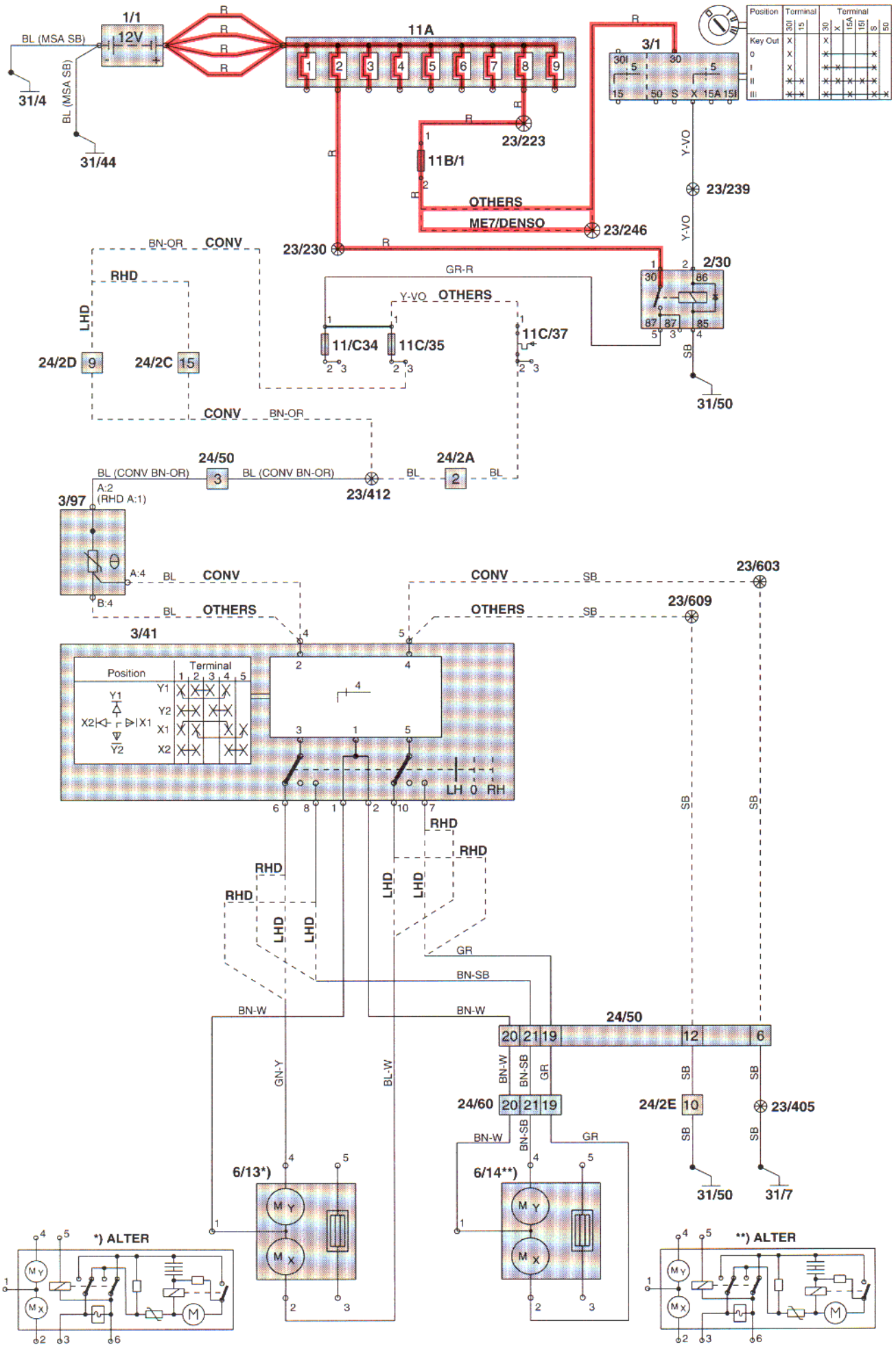

Electrical retracting door mirrors
C70 Convertible

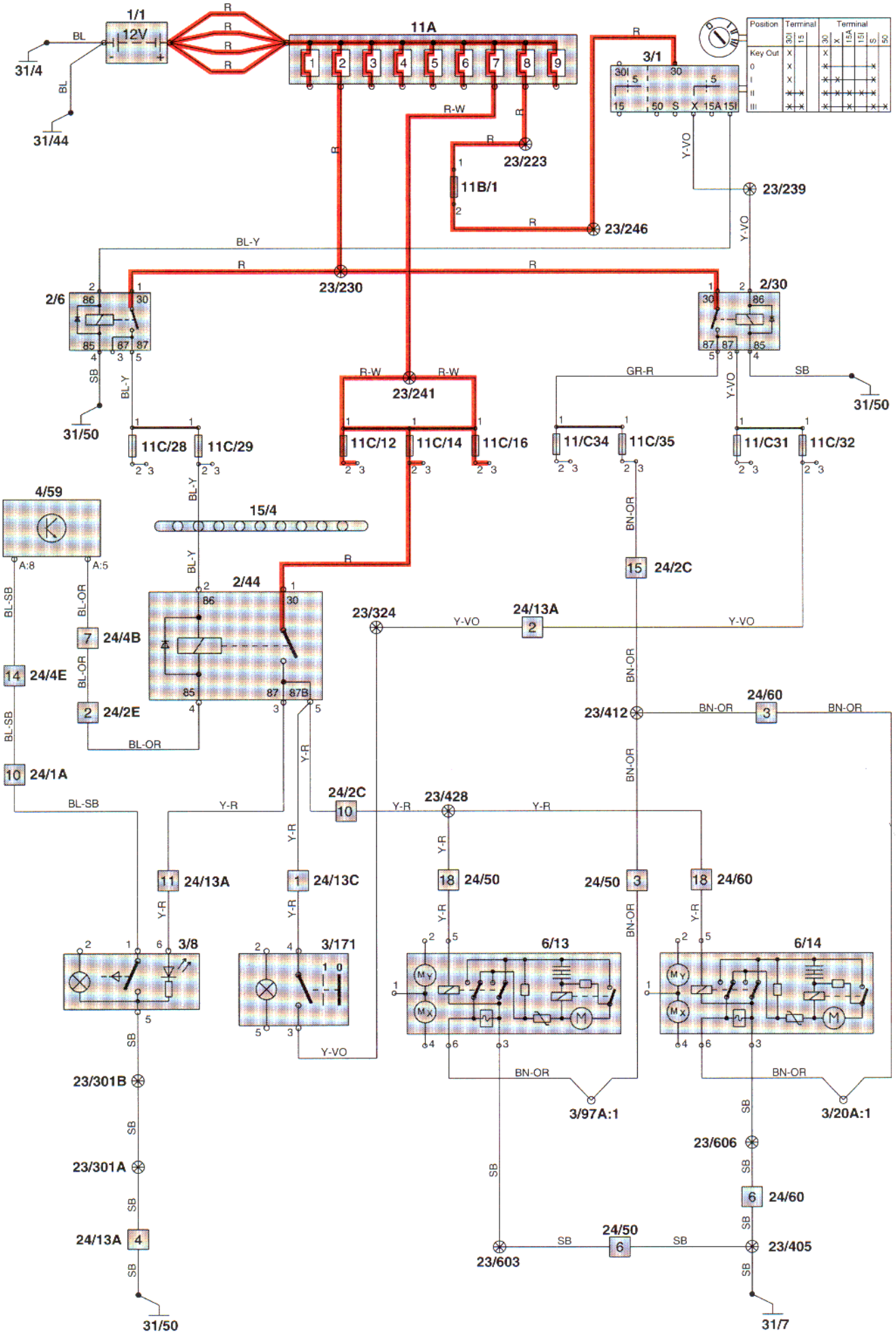

Electrical retracting door mirrors
C70 coupé, S70, V70

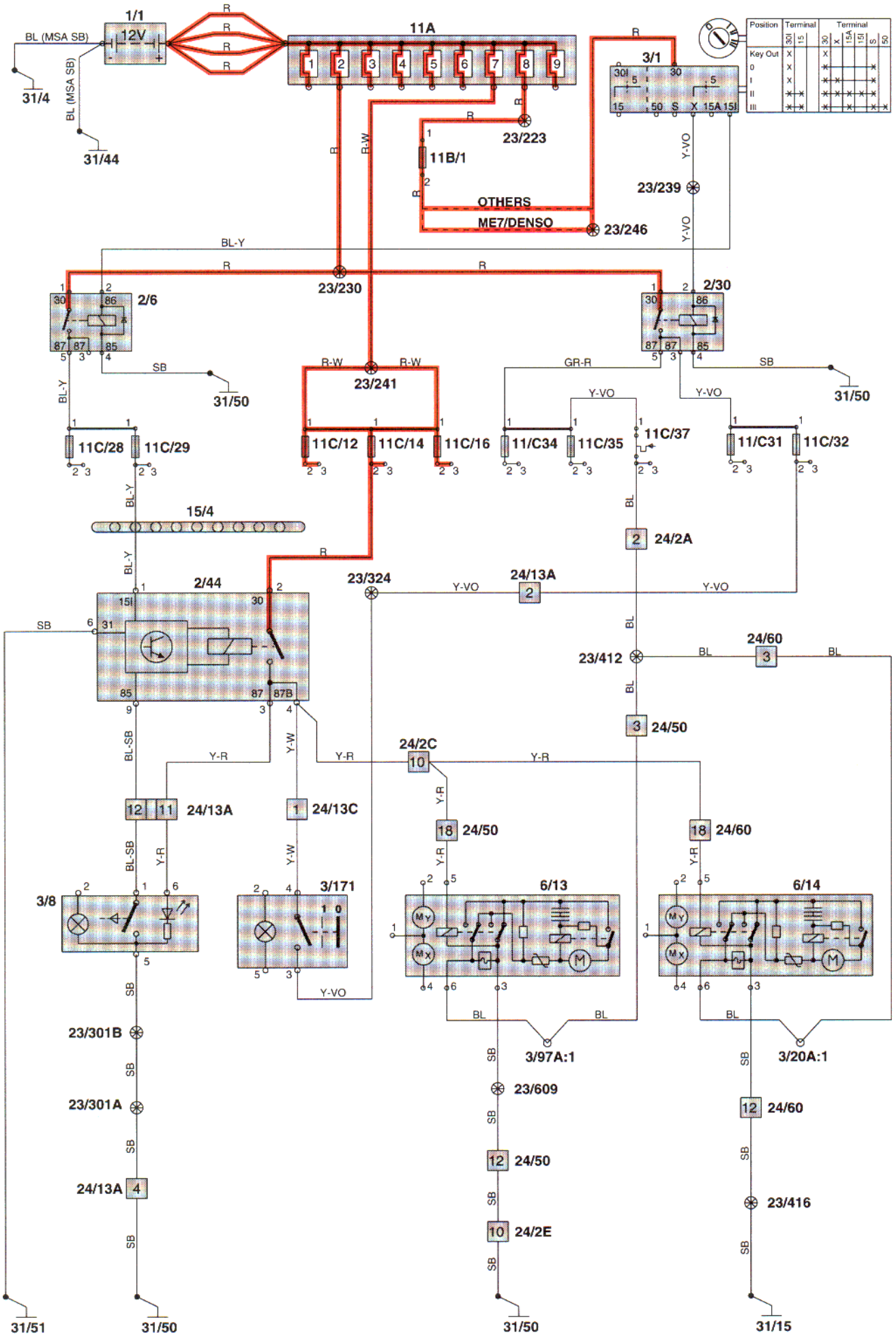

Electrically heated seats

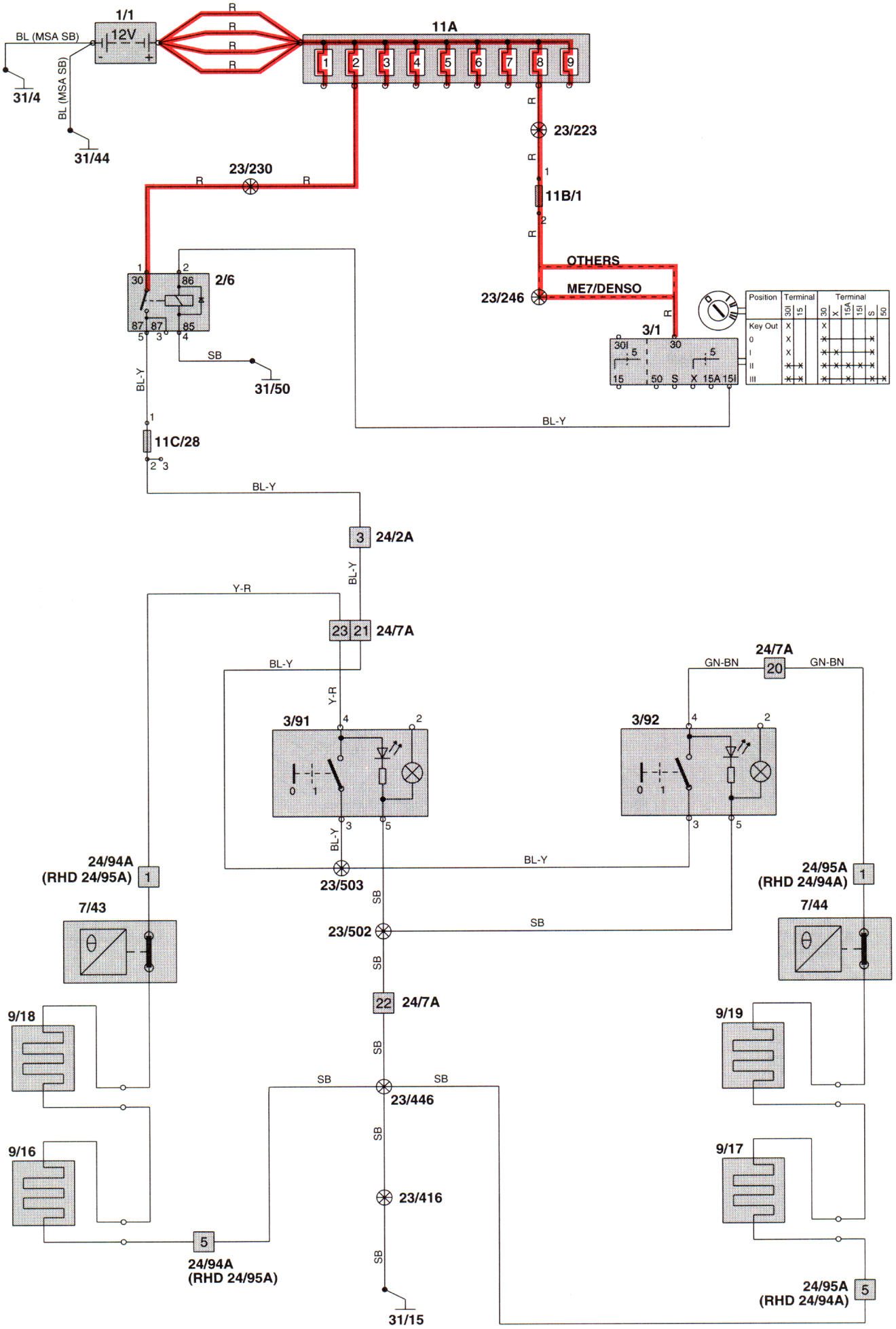

Heated rear seat

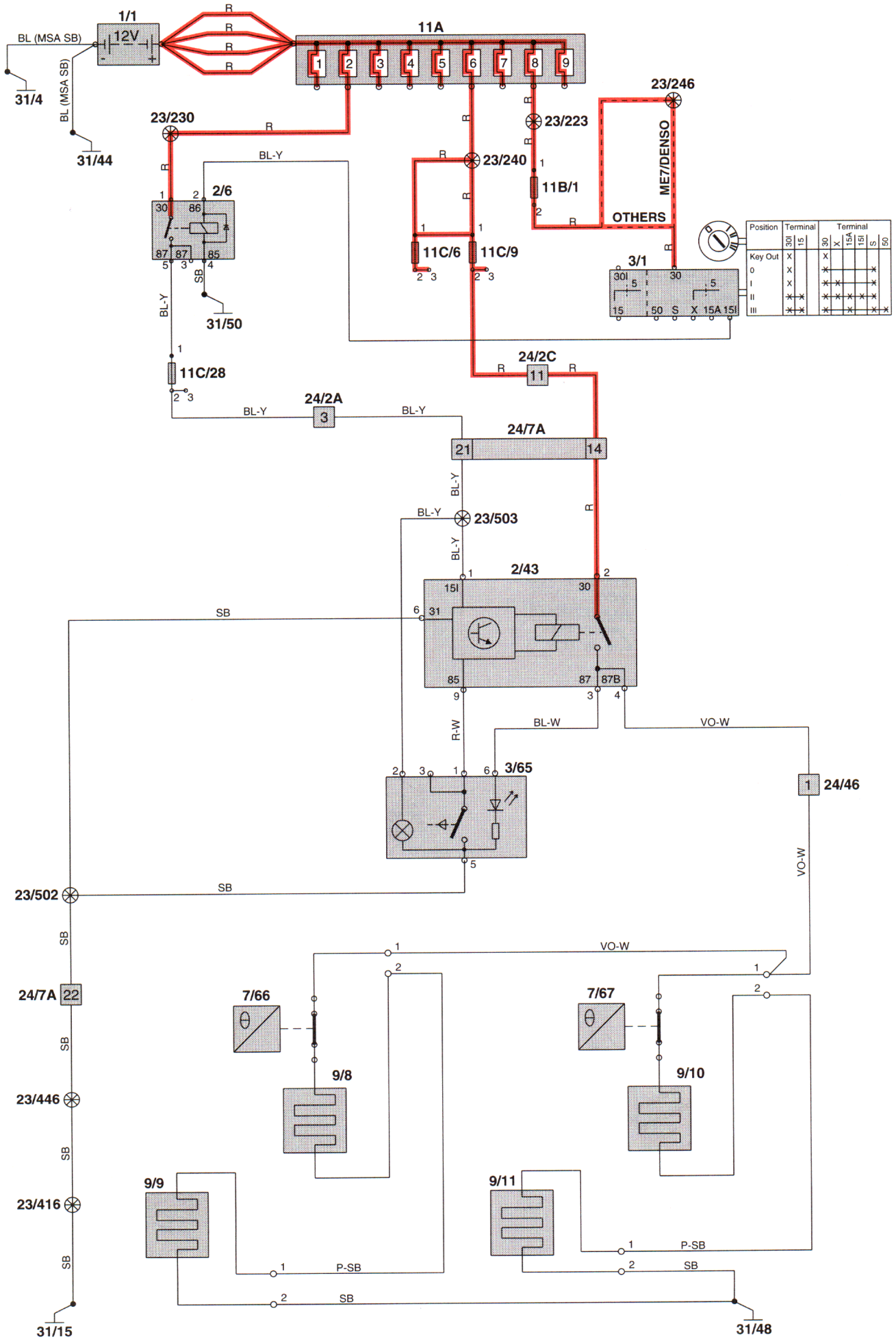

Power seats with memory

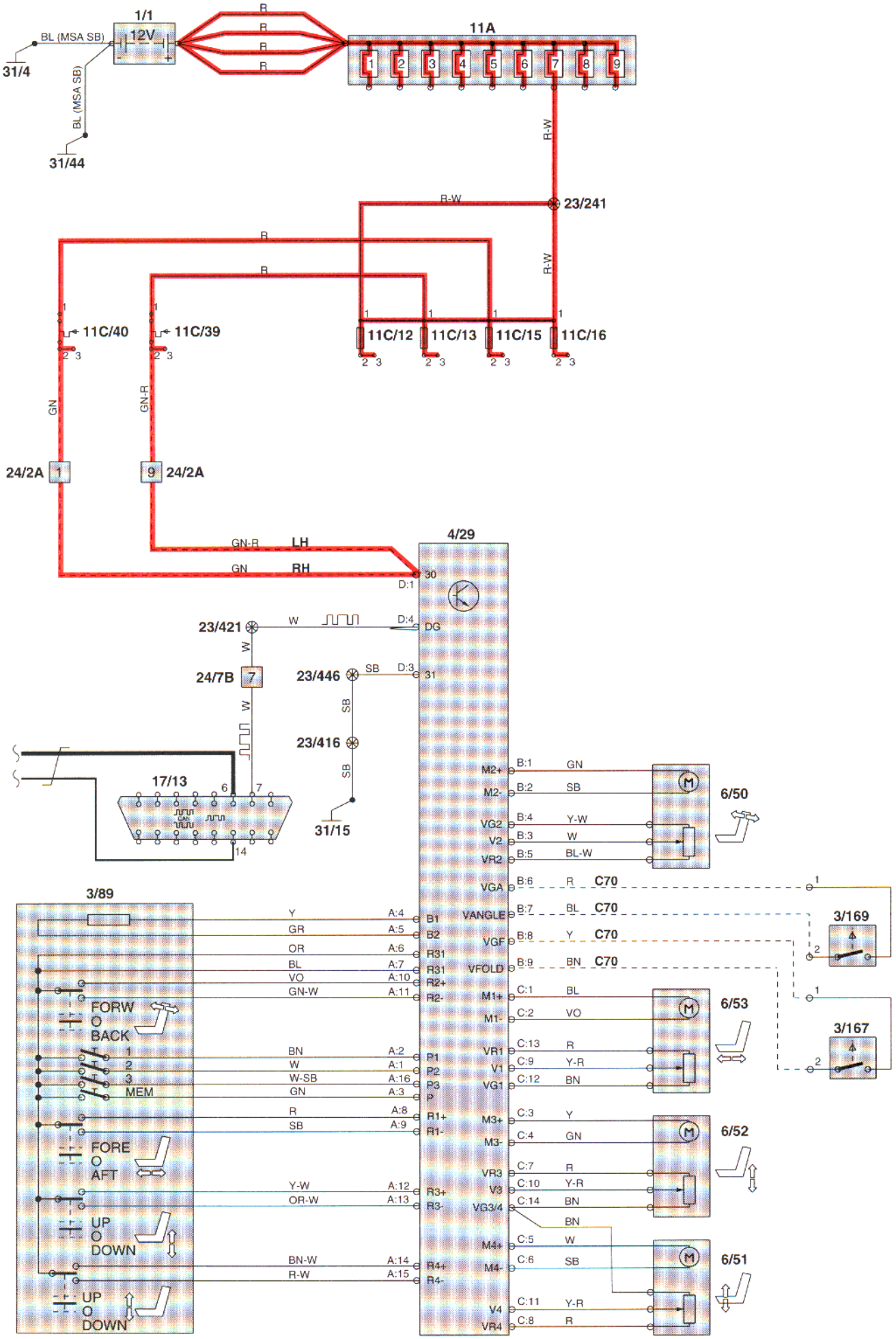

Power seats without memory

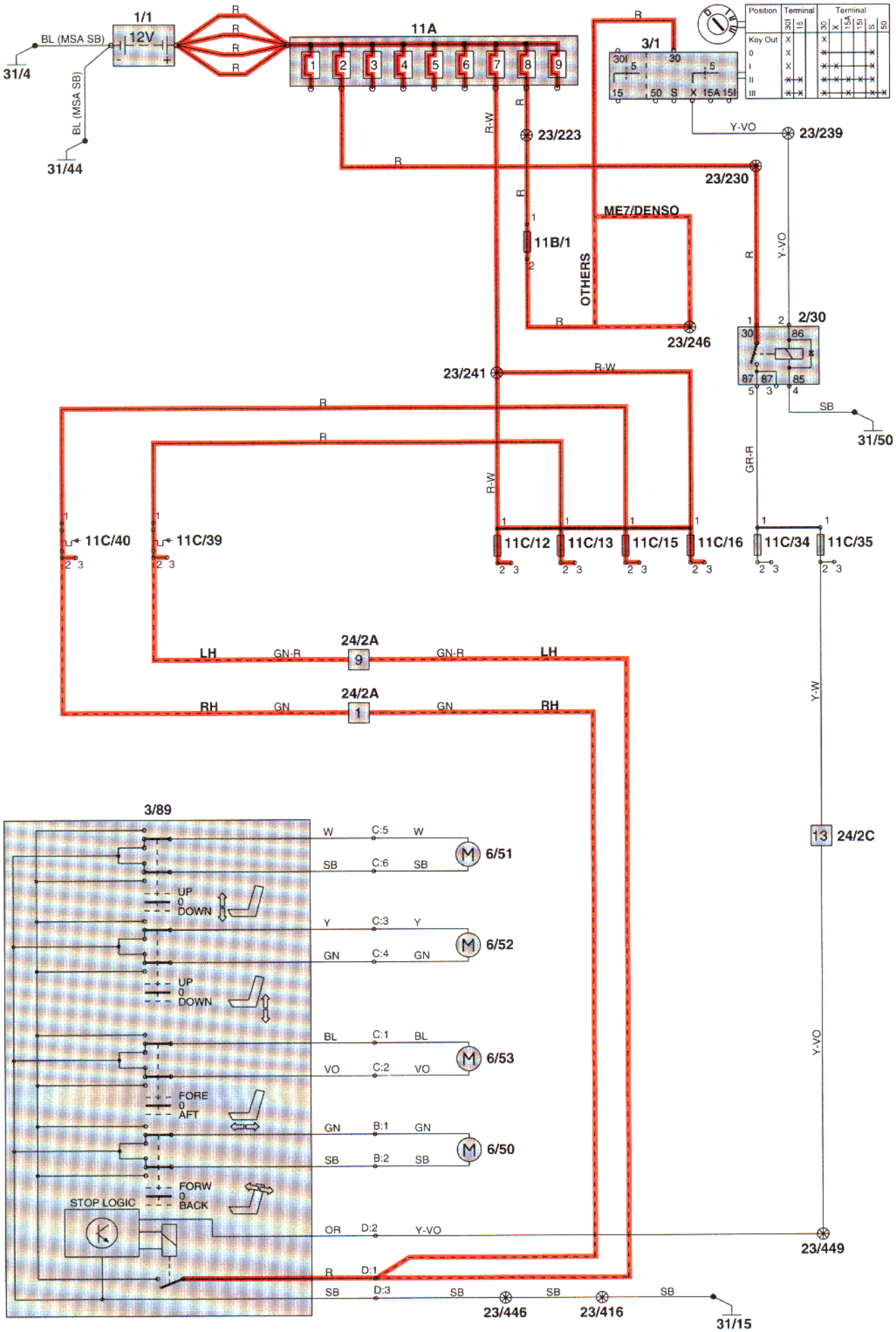

Standard heater STD

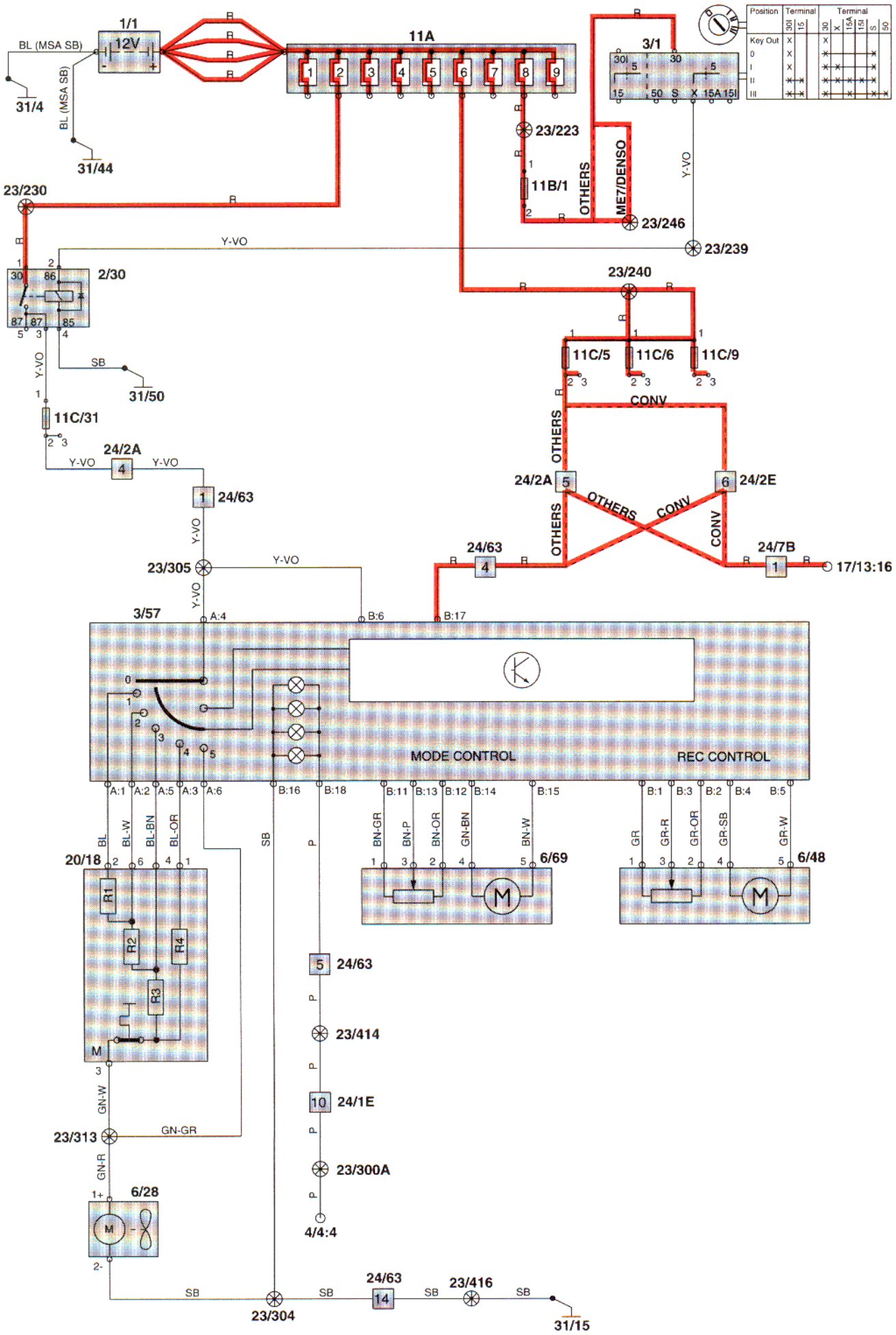

Manual climate control MCC
Fenix 5.2, MSA 15.7

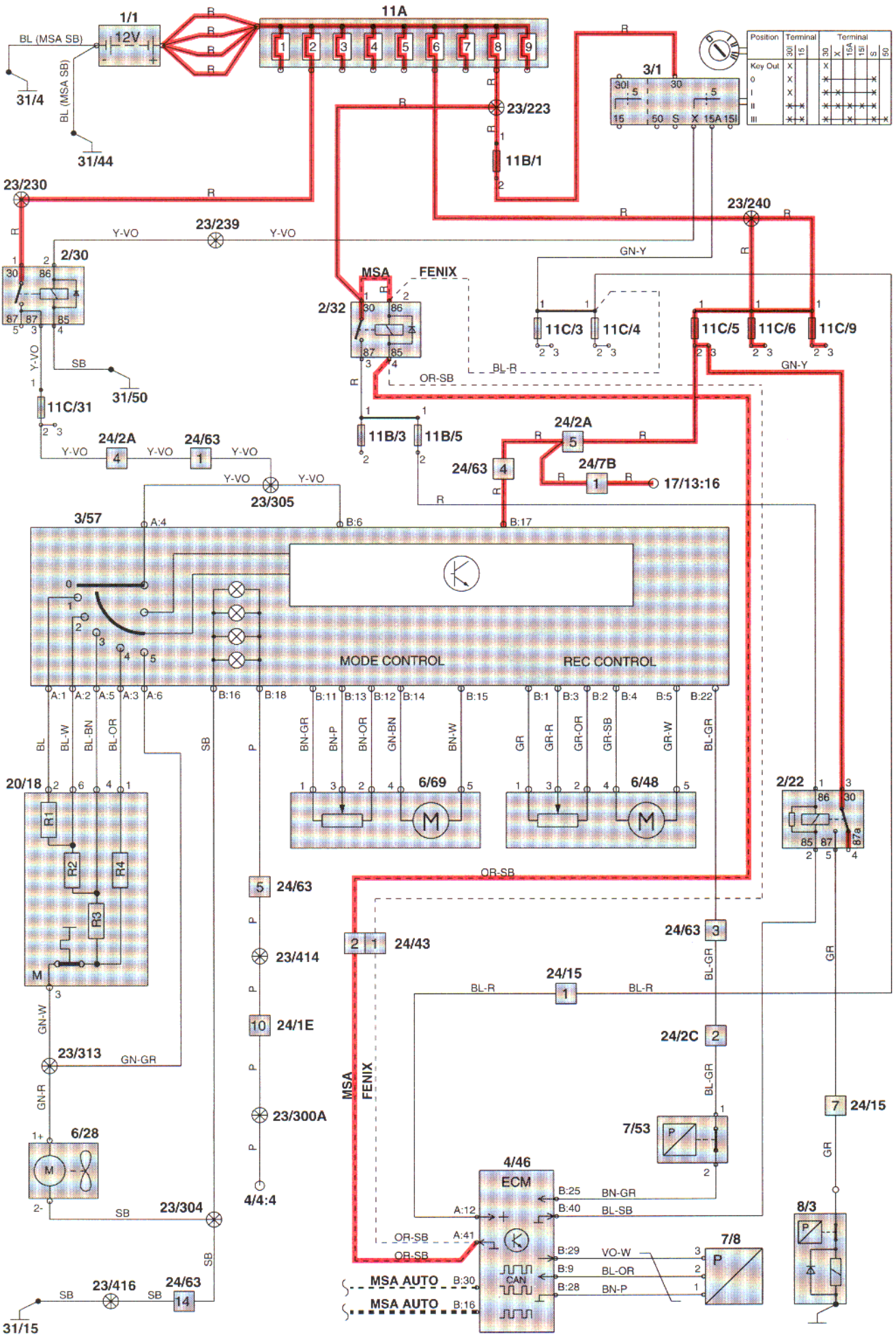

Manual climate control MCC
Denso, ME7

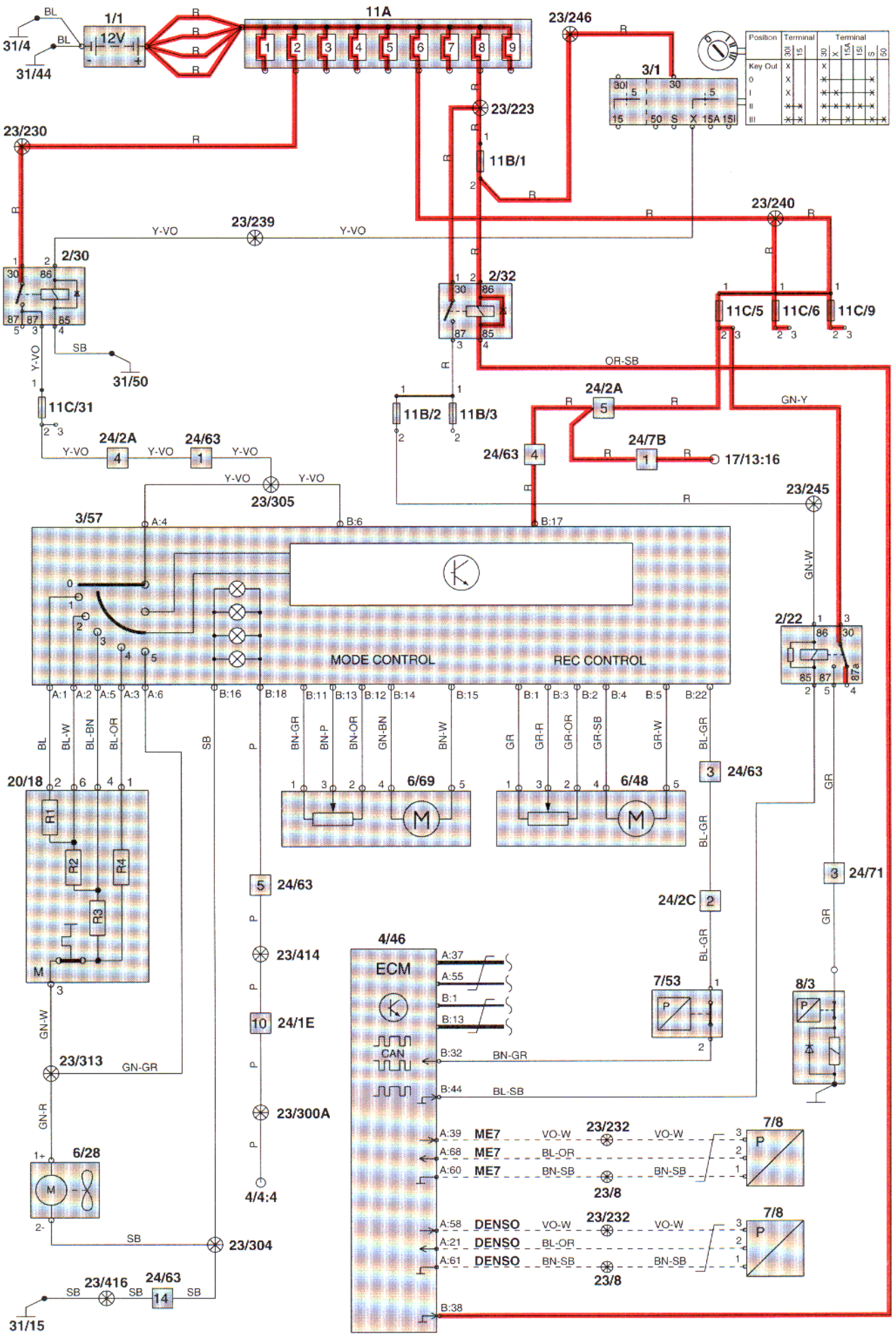

Electronic climate control ECC
Fenix 5.2, MSA 15.7

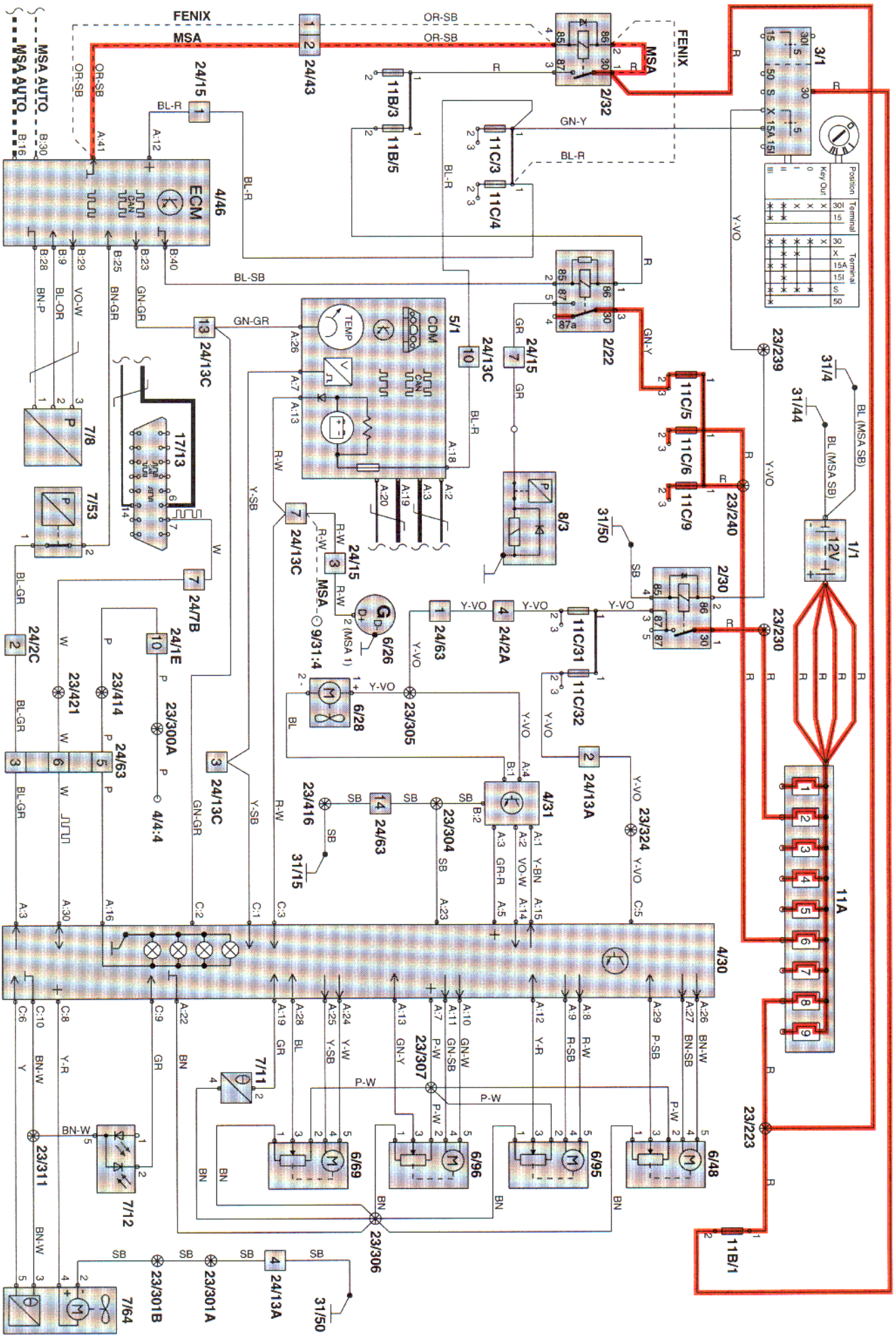

Electronic climate control ECC
Denso, ME7

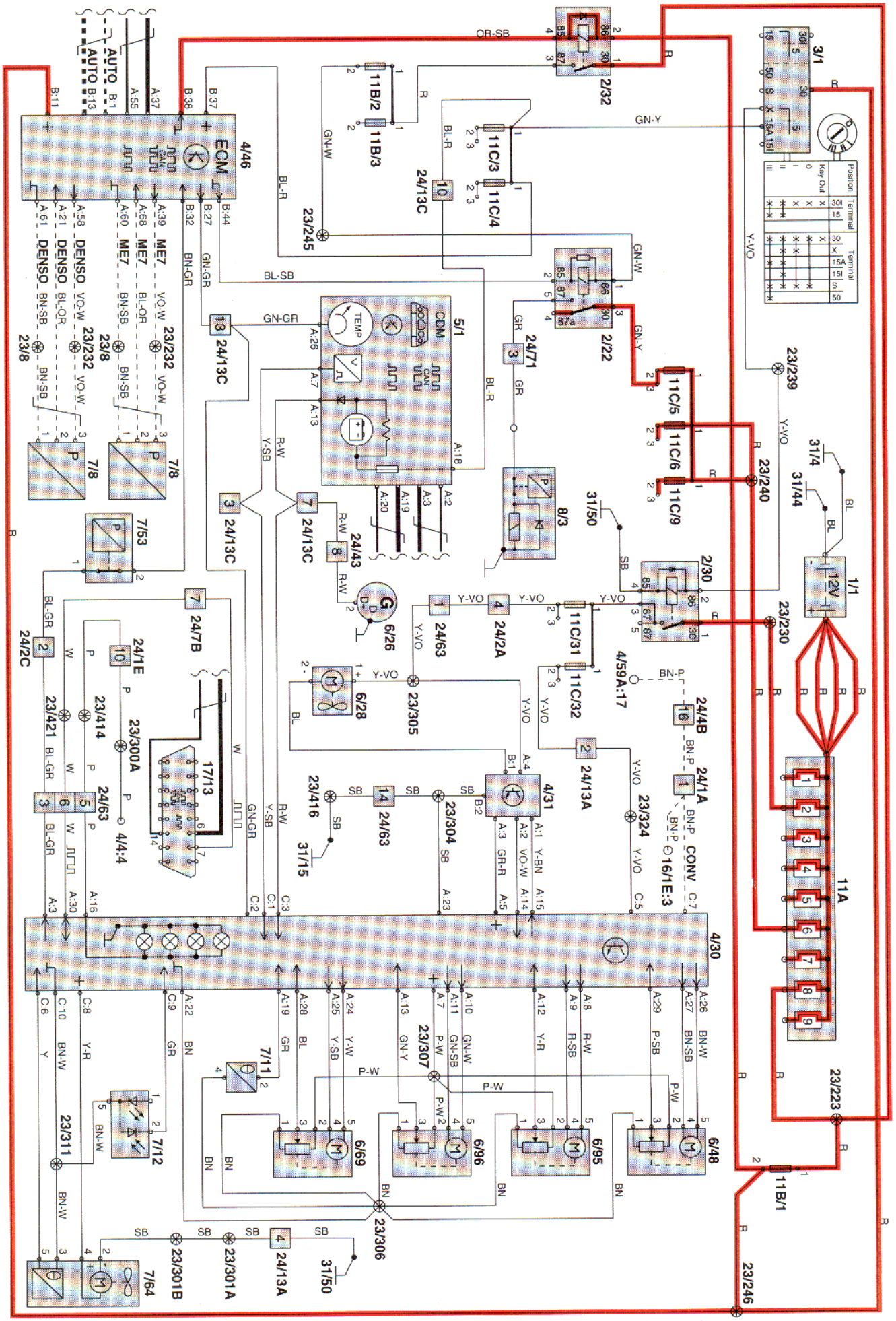

Additional heater

A Outside temperature sensor
B Flame sensor
C Engine coolant temperature (ECT) sensor
D Ground terminal, glow plugs
E Glow plugs
F Overheat protection thermostat
G Fuel pump (FP)
H Coolant pump
J Combustion fan
K Control module
L Connector on heater, 6-pin
M Timer

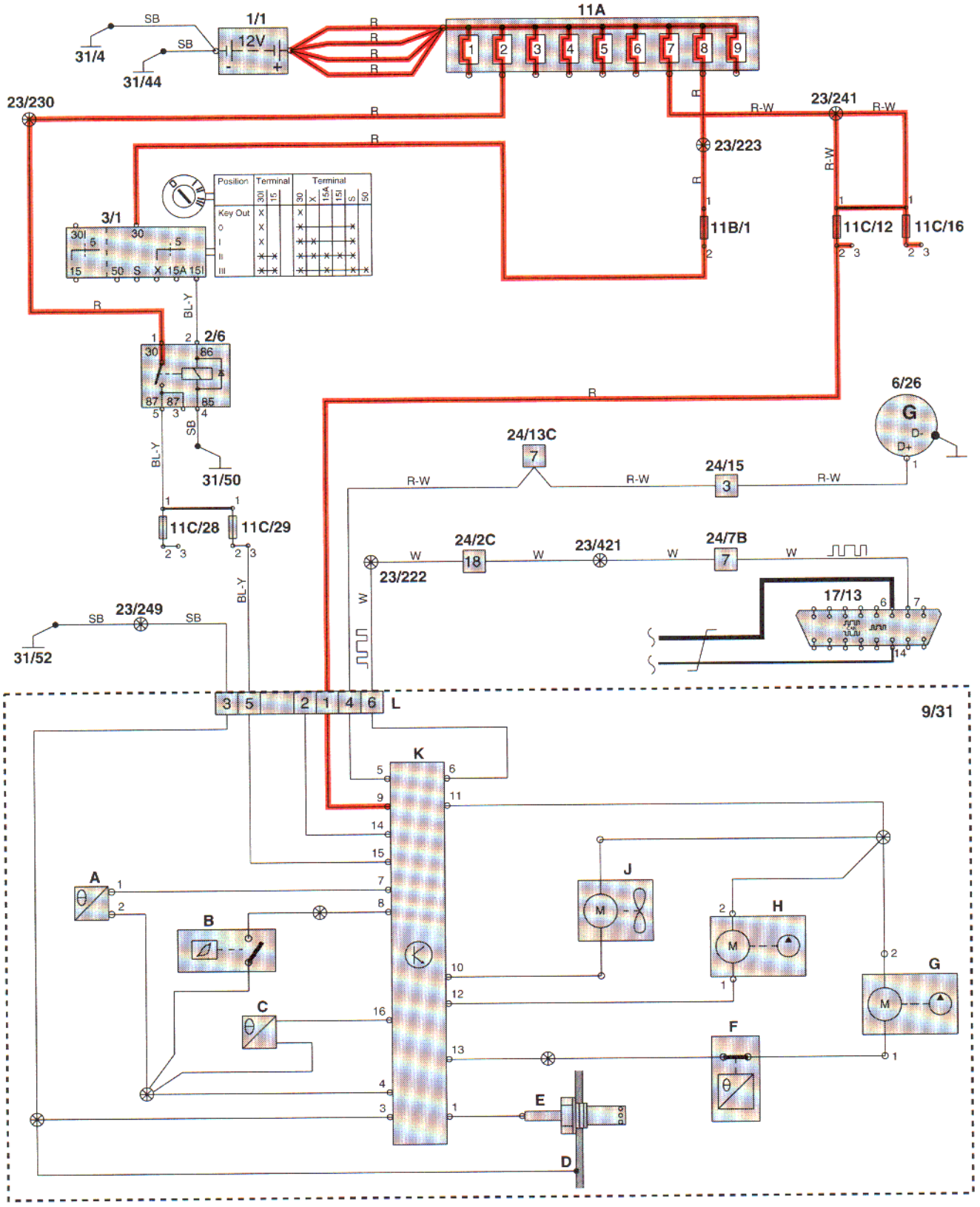

Cargo compartment fans

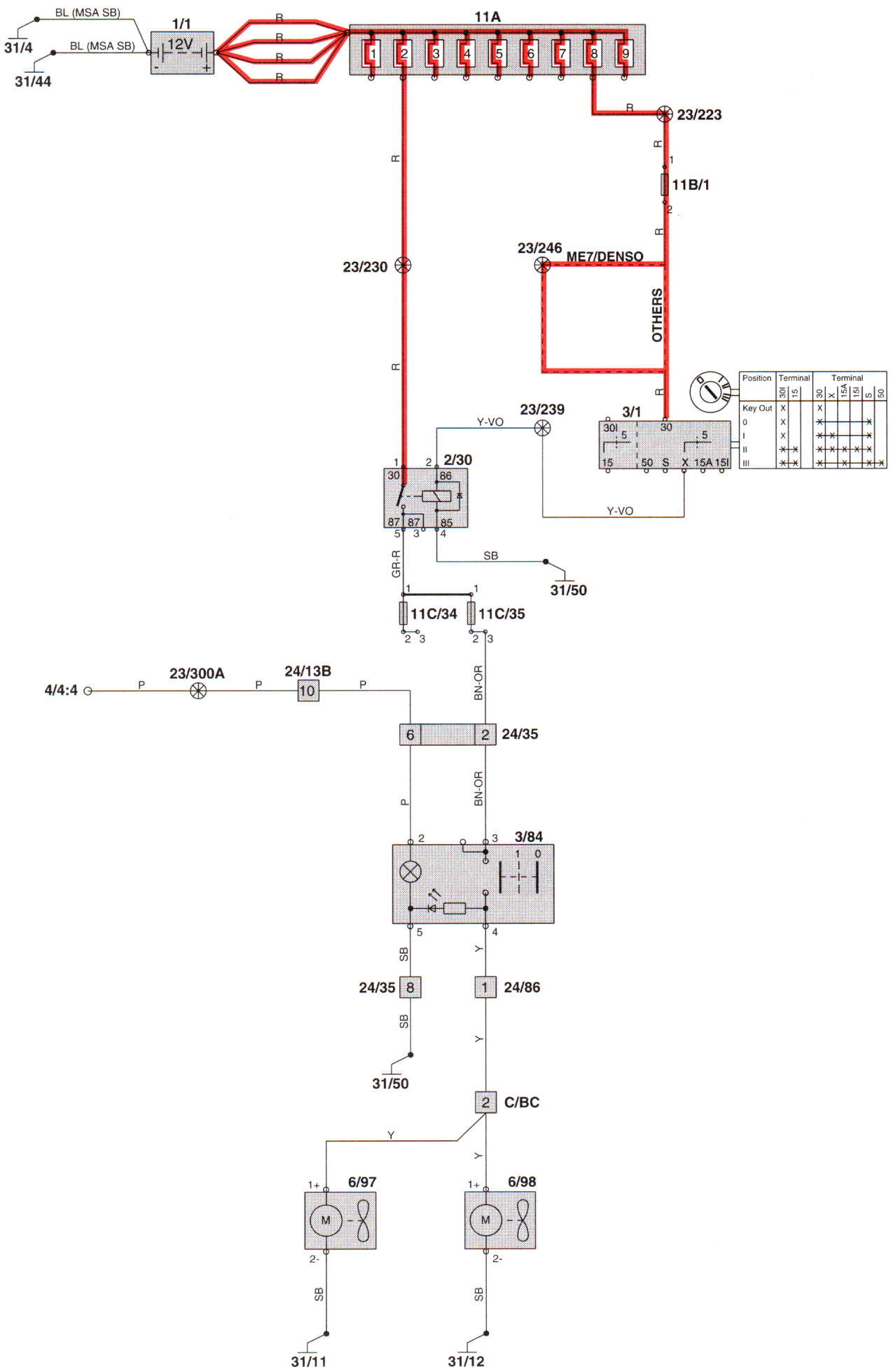

Roll over protection ROPS

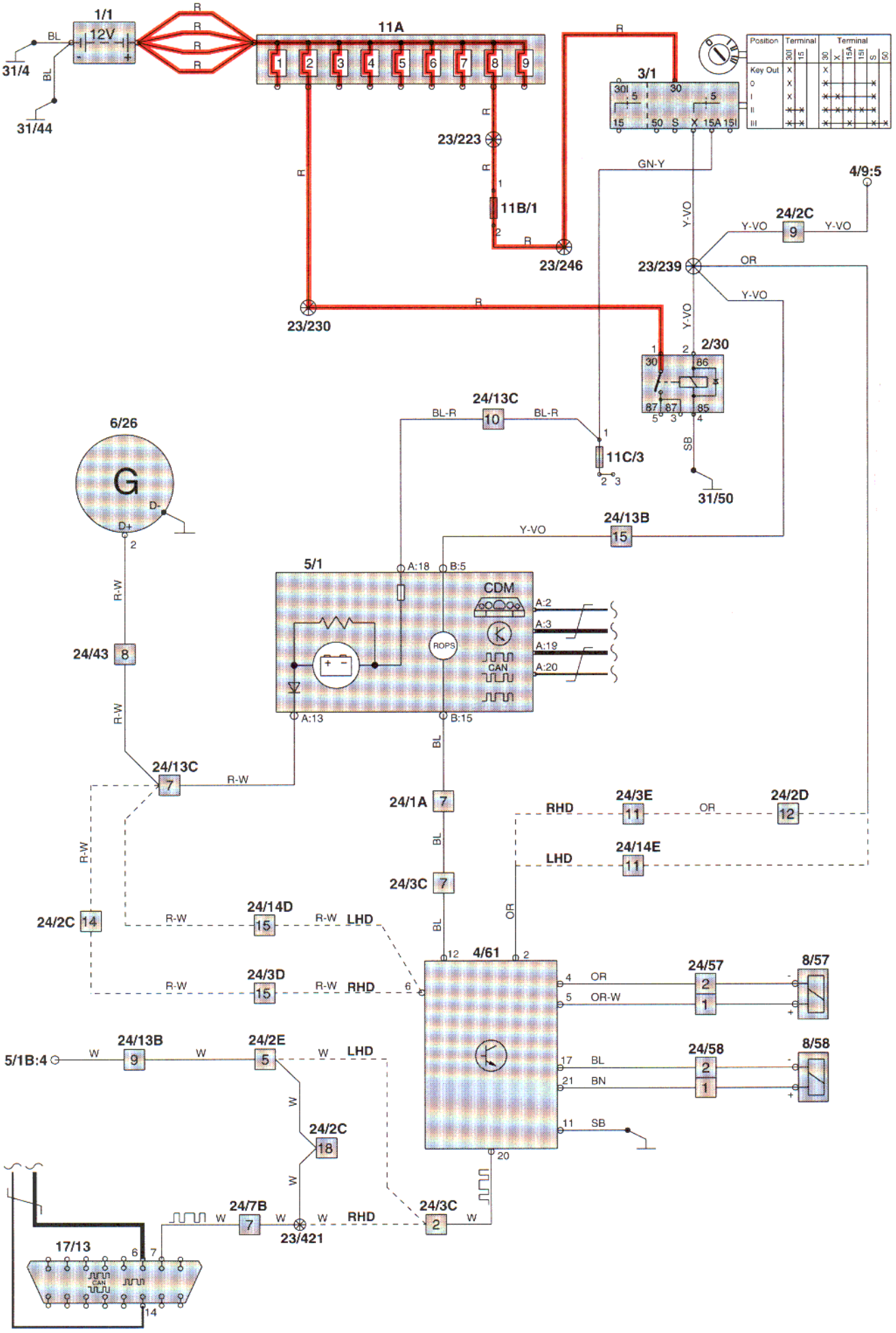

SRS Supplemental Restraint System

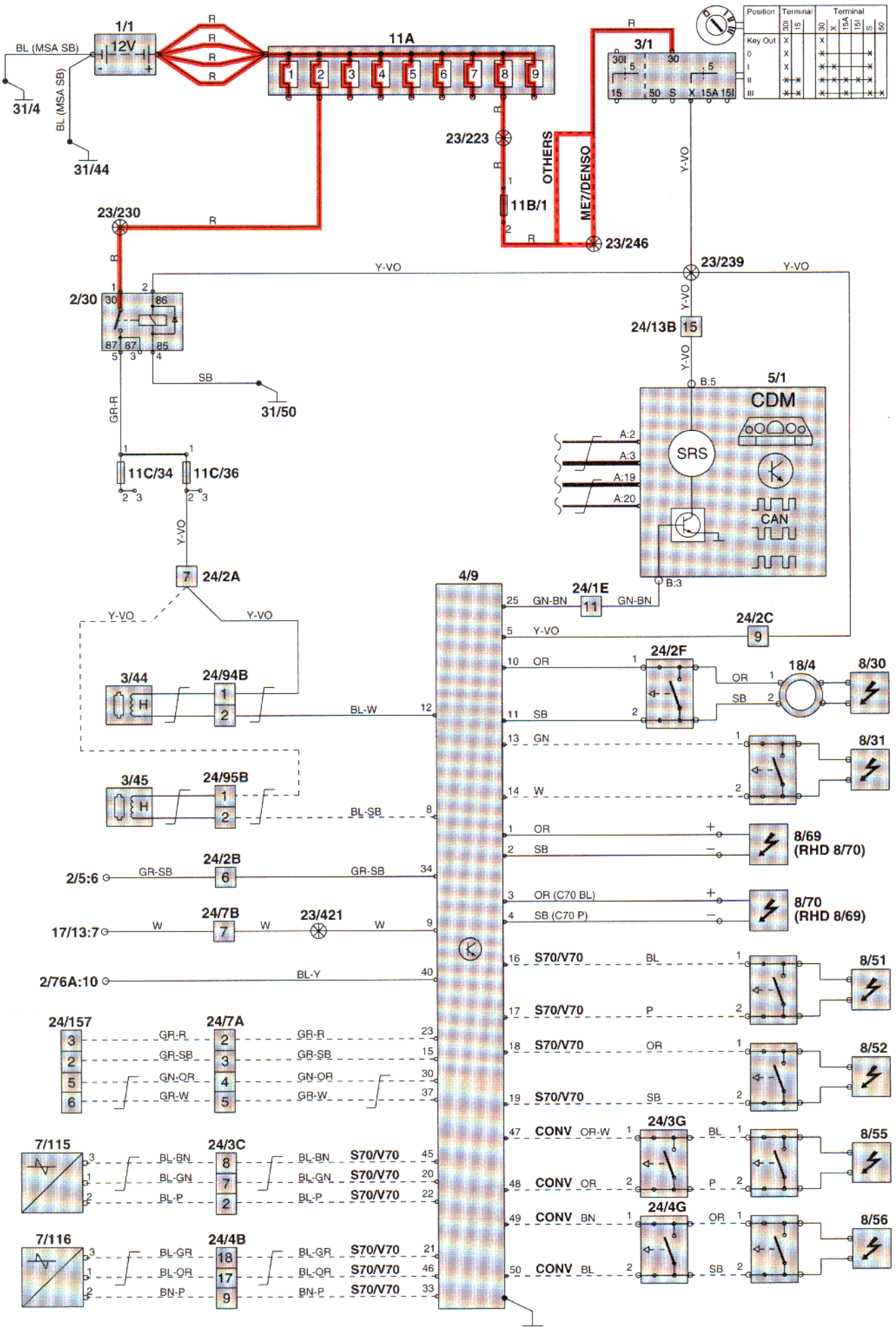

Remote controlled garage door opener

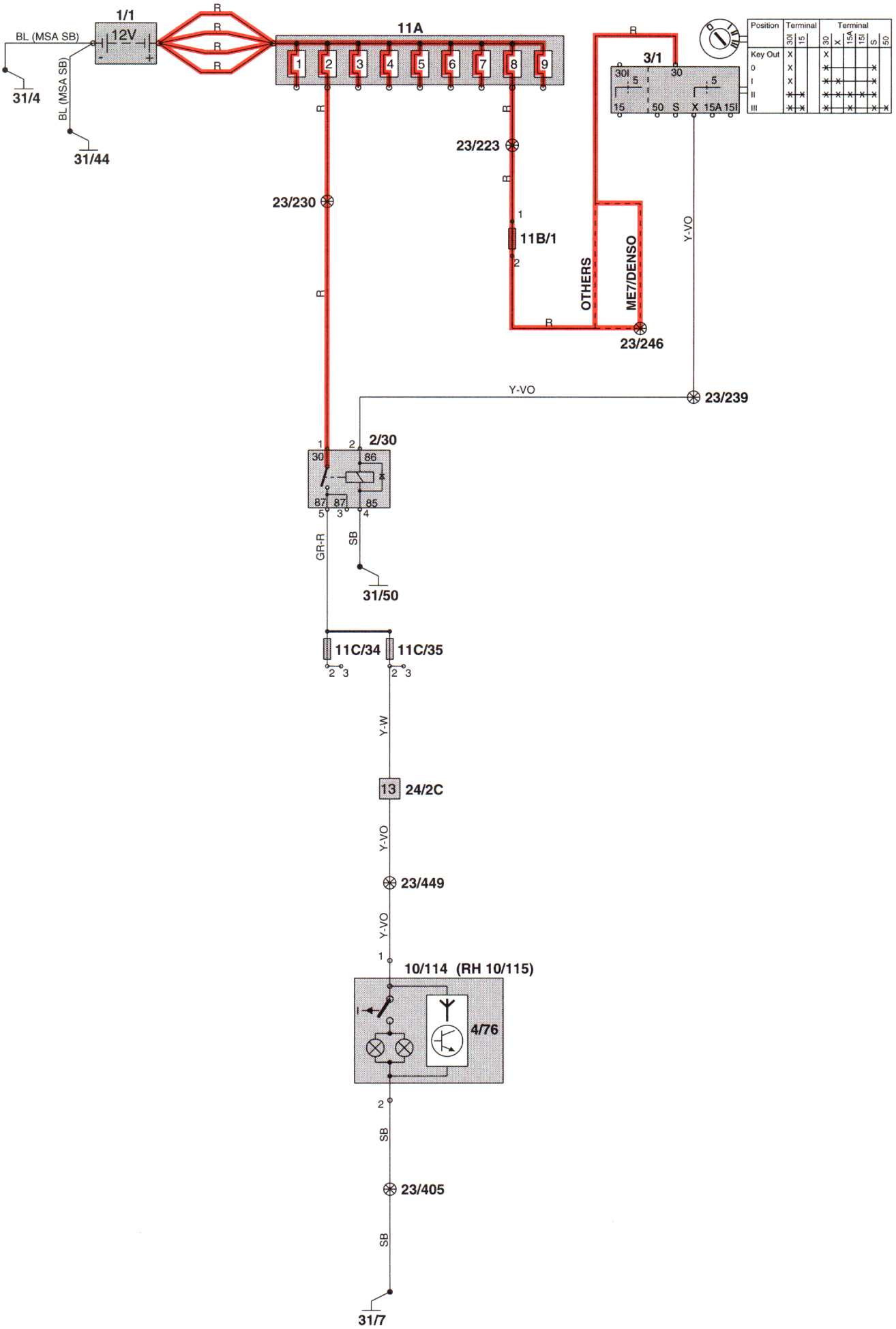

Rear view mirror with automatic dimming
C70 Convertible

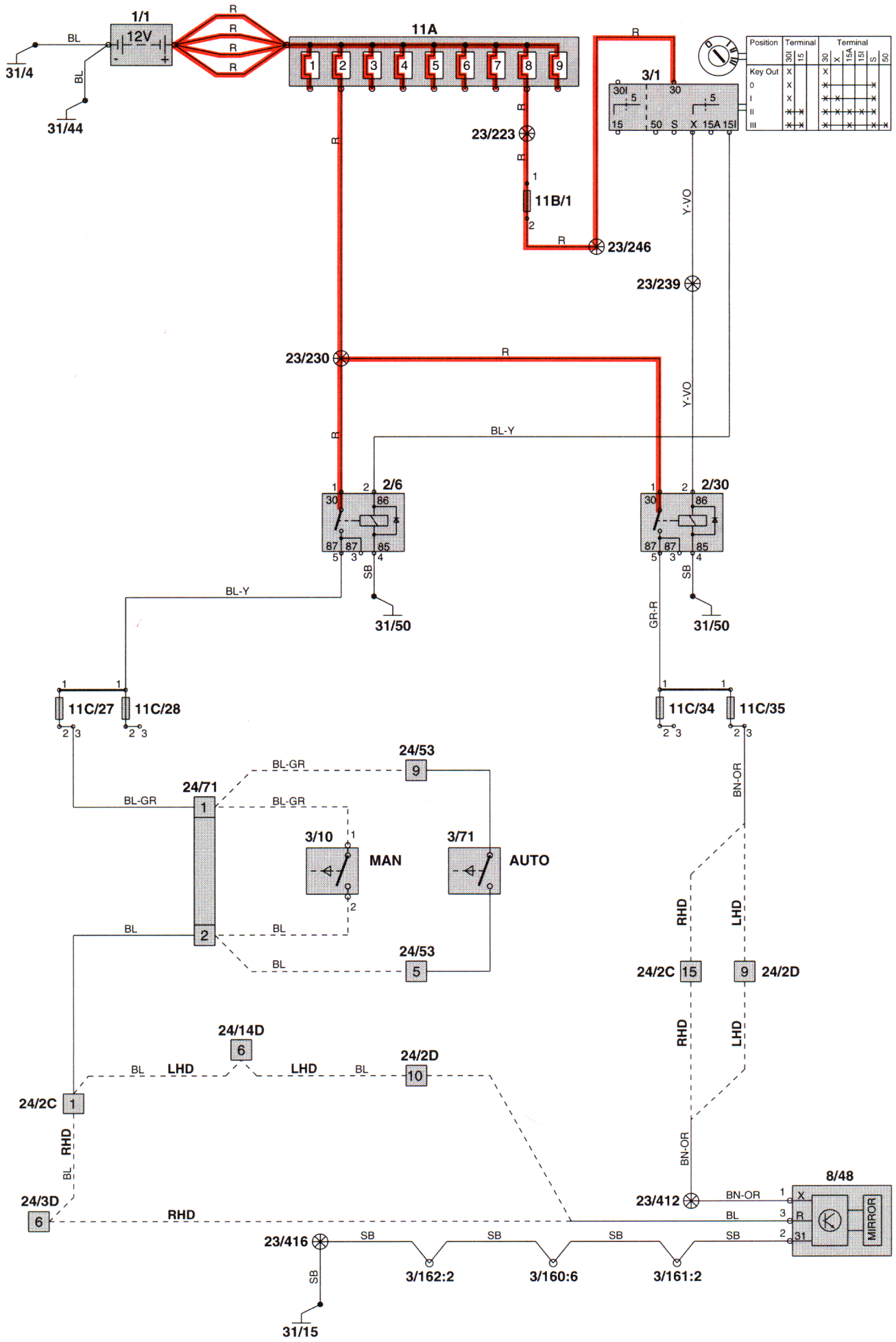

Rear view mirror with automatic dimming
C70 coupé

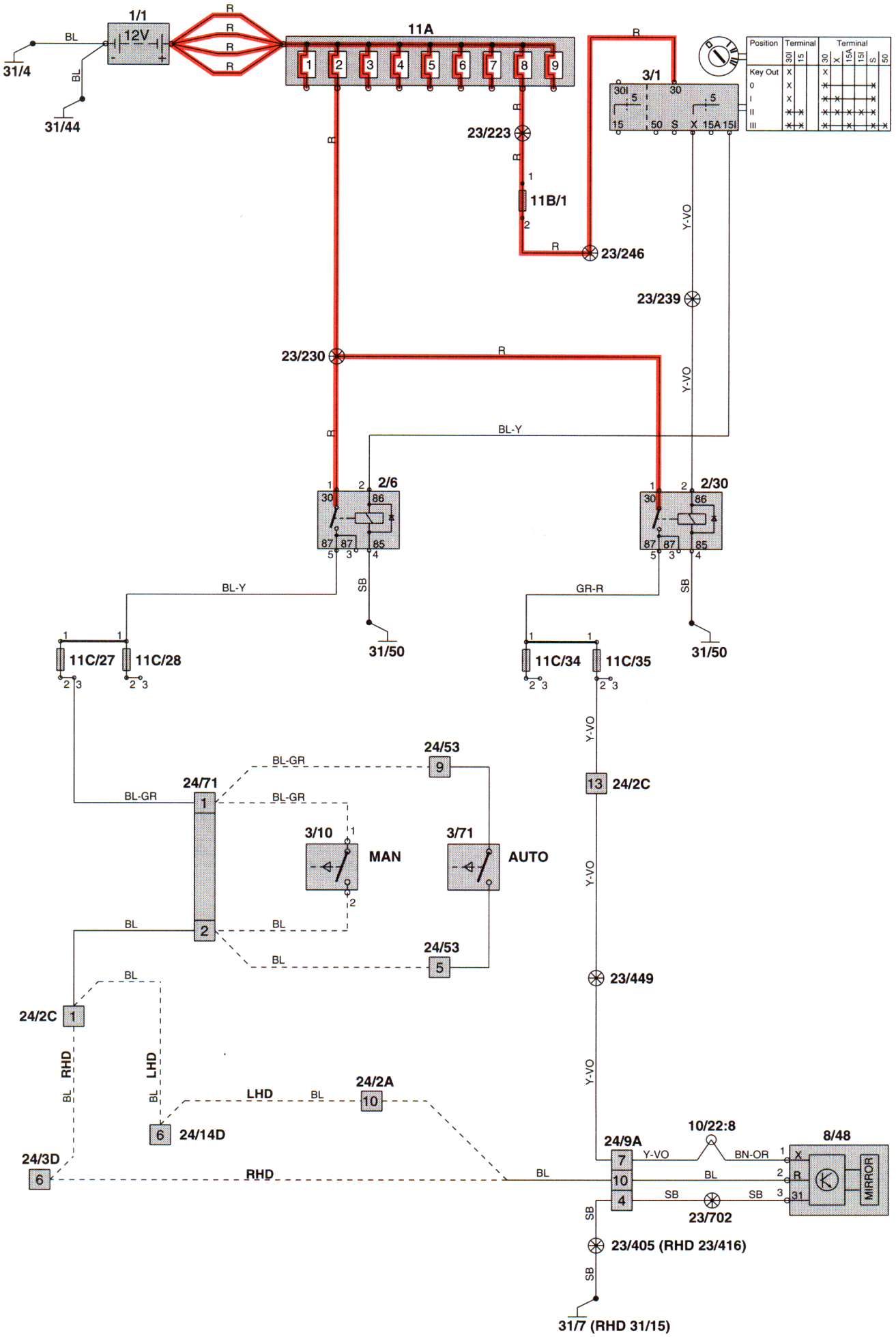

Component list

1/1	Battery
2/1	Main lighting relay with bulb failure warning sensor
2/2	Fog light relay
2/4	Windshield wiper intermittent relay
2/5	Seat belt reminder / key warning relay
2/6	Overload relay 15I-supply
2/11	Engine cooling fan relay
2/14	Glow plug relay
2/16	Tailgate wiper intermittent relay
2/22	A/C relay
2/23	Fuel pump relay
2/30	Overload relay X-supply
2/32	Main relay, fuel system
2/35	Starter motor relay
2/43	Heated rear seat relay
2/44	Relay, heated rear window door mirrors
2/54	Relay 30-supply cargo compartment
2/67	Trunk lid opening relay
2/74	Relay heating plugs coolant
2/76	Control module central locking/ alarm
2/77	Relay alarm horn
2/99	Relay left-hand side window lift mechanism
2/100	Relay right-hand side window lift mechanism
2/134	Electronic throttle module (ETM) relay
3/1	Ignition switch
3/2	Light switch
3/3	Turn signal/high and low beam switch
3/4	Electrical switch module, cruise control
3/6	Hazard warning signal flasher switch
3/8	Electrically heated rear window/door mirrors switch
3/9	Stop (brake) light switch
3/10	Back-up (reversing) light switch
3/12	Windshield wiper and washer switch
3/13	Tailgate wiper and washer switch
3/20	Power window switch front passenger door
3/25	Power sun roof switch
3/35	Trunk lid handle switch
3/37	Horn switches
3/38	Brake pedal switch
3/39	Clutch pedal switch
3/41	Door mirrors switch
3/44	Seat belt lock switch, driver's seat
3/45	Seat belt lock switch, passenger seat
3/47	Parking brake switch
3/57	Climate control
3/58	Fog tail lamp switch
3/59	Beam height control
3/61	Controls, trip computer
3/62	Alarm switch, hood
3/63	Mode selector AW 50-42
3/65	Electrically heated rear seat switch
3/71	Gear-shift position sensor
3/72	Kickdown switch, throttle control
3/76	Lock unit, left rear door
3/77	Lock unit, right rear door
3/78	Lock unit, trunk
3/84	Cargo compartment fans switch
3/85	Power window switch left rear door
3/86	Power window switch, right rear door
3/89	Control unit seat
3/91	Heated seat front left switch
3/92	Heated seat front right switch
3/95	TRACS switch
3/97	Power window switch driver's door
3/99	Front fog lamps switch
3/100	Lock unit driver door
3/109	Trunk lid / fuel tank filler cover switch
3/110	Lock unit passenger door
3/120	Soft-top switch
3/144	Lock unit, trunk
3/146	Rear bass speakers switch
3/160	Interior lighting switch
3/161	Vanity mirror lighting switch left-hand side
3/162	Vanity mirror lighting switch right-hand side
3/167	Backrest upper switch
3/169	Backrest lower switch
3/171	Retractable power door mirrors switch
3/186	Tensioner strut lock micro-switch
3/187	Tensioner strut lock micro-switch
3/188	Micro-switch tensioner strut
3/189	Micro-switch locking arm
3/190	Micro-switch locking arm
3/191	Micro-switch cover panel locking
3/192	Micro-switch cover panel locking
4/3	Control module, cruise control
4/4	Rheostat
4/9	SRS control module
4/16	ABS control module
4/19	Remote control central locking / anti-theft alarm
4/22	Immobilizer
4/28	Transmission control module (TCM)
4/29	Control module seat
4/30	Control module, ECC
4/31	Blower fan control module
4/33	Control module, power sunroof
4/44	Ignition Discharge Module (power stage) and ignition coil
4/46	Engine control module (ECM)
4/50	Electronic throttle module (ETM)
4/59	Soft-top control module
4/60	Power windows control module
4/61	Control module roll-over bar
4/76	Remote control module garage door opener
5/1	Combined instrument panel (CDM)
6/1	Windshield wiper motor
6/2	Washer motor, front
6/3	Right headlamp washer motor
6/4	Left headlamp washer motor
6/9	Power window motor driver's door
6/11	Power window motor front passenger door
6/13	Power door mirror driver side
6/14	Power door mirror passenger side
6/15	Power sunroof motor
6/24	Cruise control vacuum pump
6/25	Starter motor

There are a number of abbreviations in the book. These are explained below.

Countries/Markets:

A = Austria
AUS = Australia

B = Belgium

CDN = Canada
CH = Switzerland

D = Germany
DK = Denmark

E = Spain
EU/OS = Markets outside USA and Canada:

FIN = Finland

GB = Great Britain

J = Japan

KOR = Korea

N = Norway
NL = Holland

S = Sweden

WEU = Western Europe

Colors:

BL = Blue
BN = Brown

GN = Green
GR = Gray

OR = Orange

P = Pink

R = Red

SB = Black

VO = Violet

W = White

Y = Yellow

Other

ALTER = Alternatively
AUTO = Automatic transmission
AWD = Four wheel drive

CAN = CAN-communication
CONV = C70 convertible
COUP = C70 coupé

DENSO = 5 cylinders / 20 valves without turbocharger (TC)

EARLY = Early type
EXC = Exclusive

FENIX = 5 cylinders / 10 valves

IMMO = Immobilizer

LATE = Late type
LH = Left-hand side
LHD = Left-hand drive (LHD)

MAN = Manual transmission
MSA = Diesel

OTHERS = Other

ME7 = 5 cylinders / 20 valves with turbocharger (TC)
RH = Right-hand side
RHD = Right-hand drive

W/O = Without

How to use the diagrams

A. Component designation

Each component has a component designation. It consists of a type number and a component number.

There is a list of component designations at the end of the book. The names of the components can be seen using the illustrations.

B. Type number

The first section of the component designation gives the type of component, for example electrical switch, electric motor etc.

Type numbers:

1 Battery
2 Relay
3 Electrical switch
4 Control module
5 Combined instrument panel
6 Electric motor
7 Sensor
8 Actuator
9 Heater element
10 Lamp
11 Fuse
15 Distribution rail, power supply
16 Radio
17 Service/diagnosis
18 Contact Reel
19 Gauge
20 Ignition component/resistor
23 Junction point
24 Connector
31 Ground terminal
34 Terminal block / -bracket
C Connector

C. Component number

The first section of the component designation gives the specific component, for example electrical switch, central locking motor, etc.

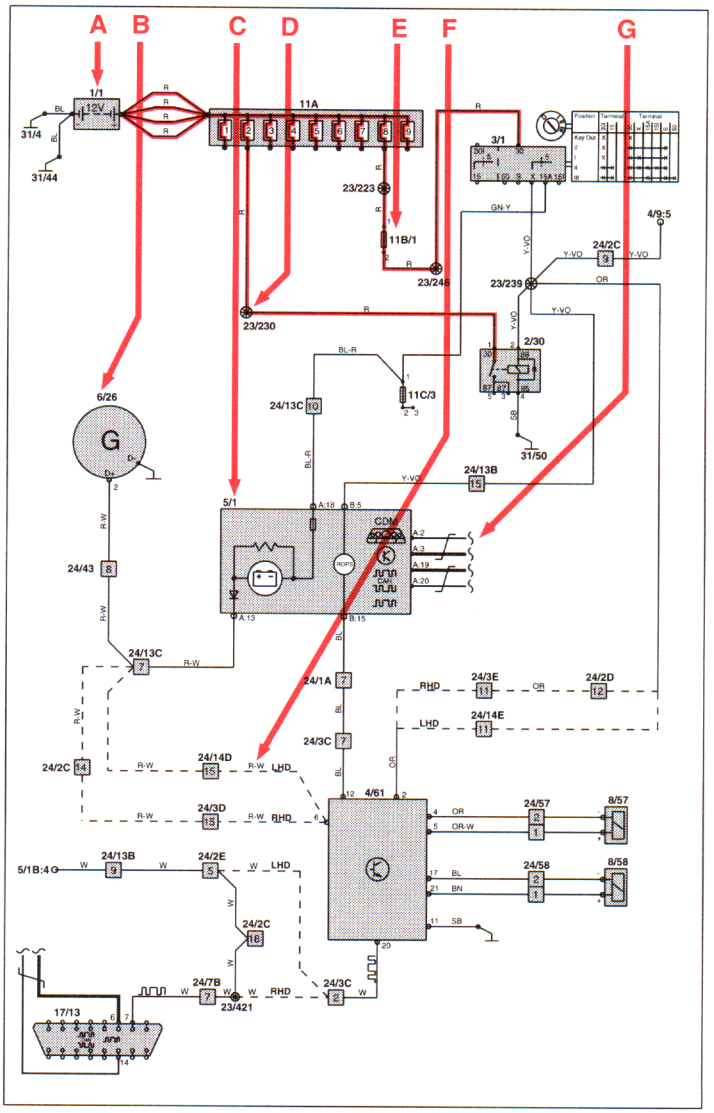

Explanation of symbols

= System voltage

= Ground terminal

= Screened cable

= Junction point

= Twinned cables

= Electrical connection

= No electrical connection

= Variant

= CAN-communication

= CAN high signal (CAN H)

= CAN low signal (CAN L)

Fuses

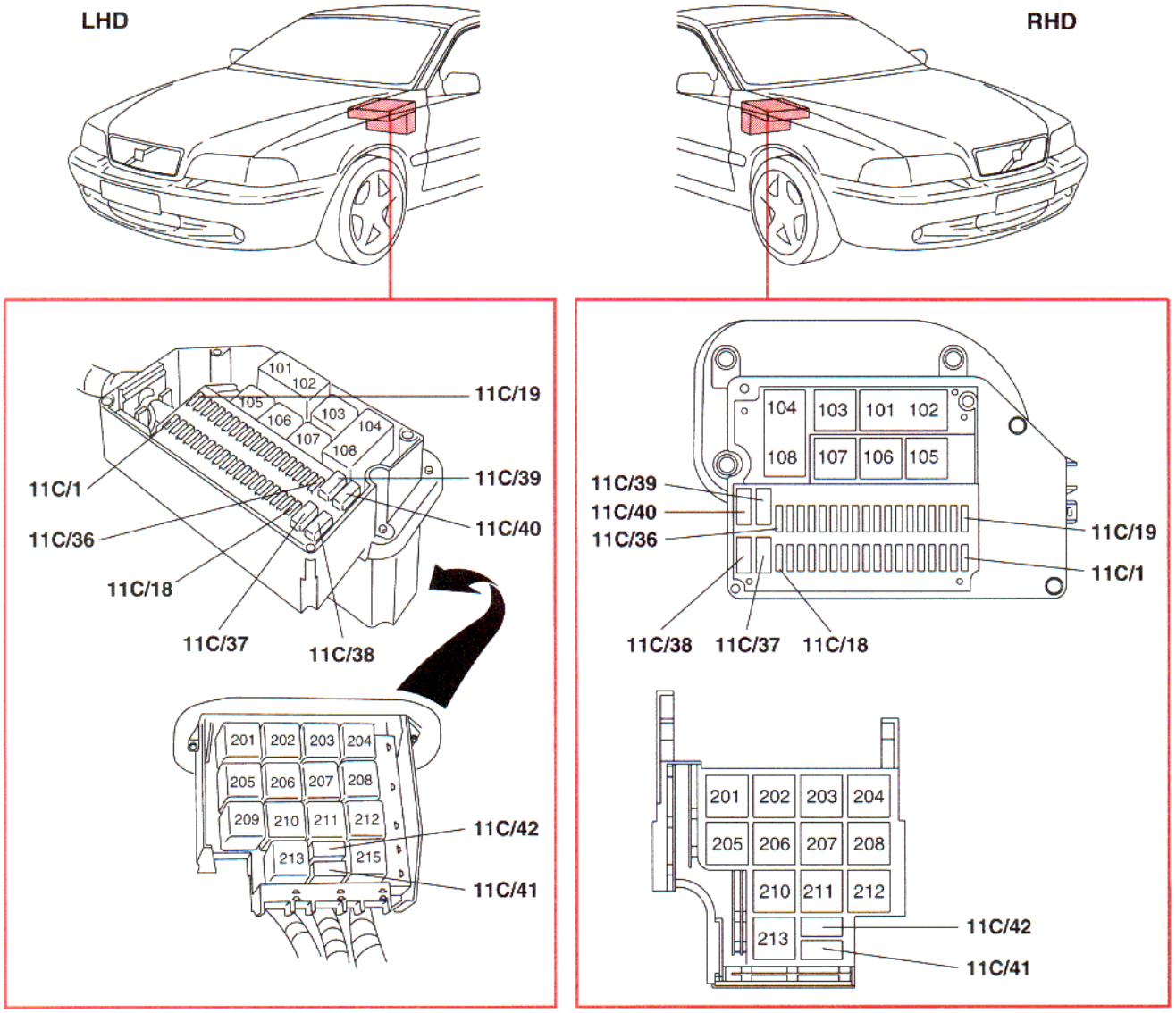
LHD
RHD
101
102
105
106
103
104
107
108
11C/19
11C/1
11C/39
11C/36
11C/40
11C/18
11C/37
11C/38
201
202
203
204
205
206
207
208
209
210
211
212
213
215
11C/42
11C/41
104
103
101
102
108
107
106
105
11C/39
11C/40
11C/36
11C/19
11C/1
11C/38
11C/37
11C/18
201
202
203
204
205
206
207
208
210
211
212
213
11C/42
11C/41

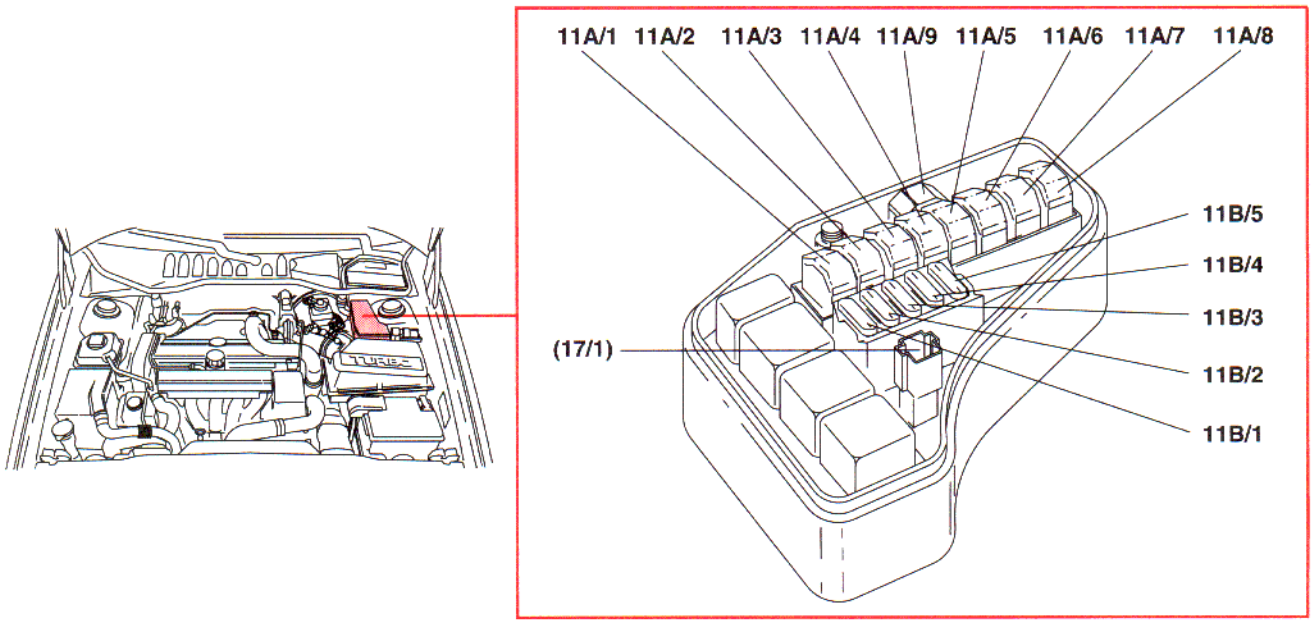
11A/1
11A/2
11A/3
11A/4
11A/9
11A/5
11A/6
11A/7
11A/8
11B/5
11B/4
11B/3
11B/2
11B/1
(17/1)

Rails in the central electrical unit

15/4	15I-rail
15/8	X-rail
31/50	Ground connection rail (power ground)
31/51	Ground connection rail (signal ground)

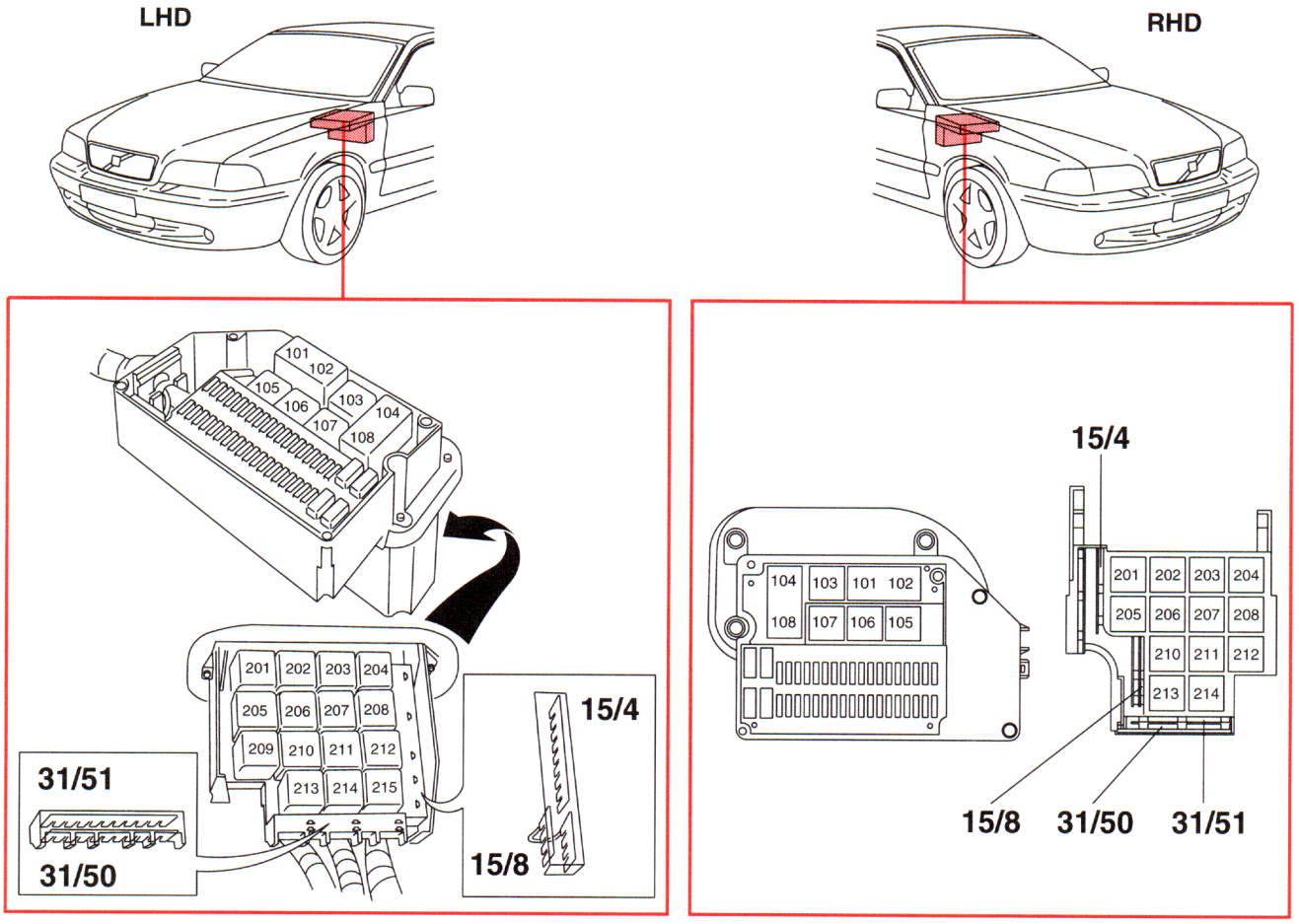

Ignition switch

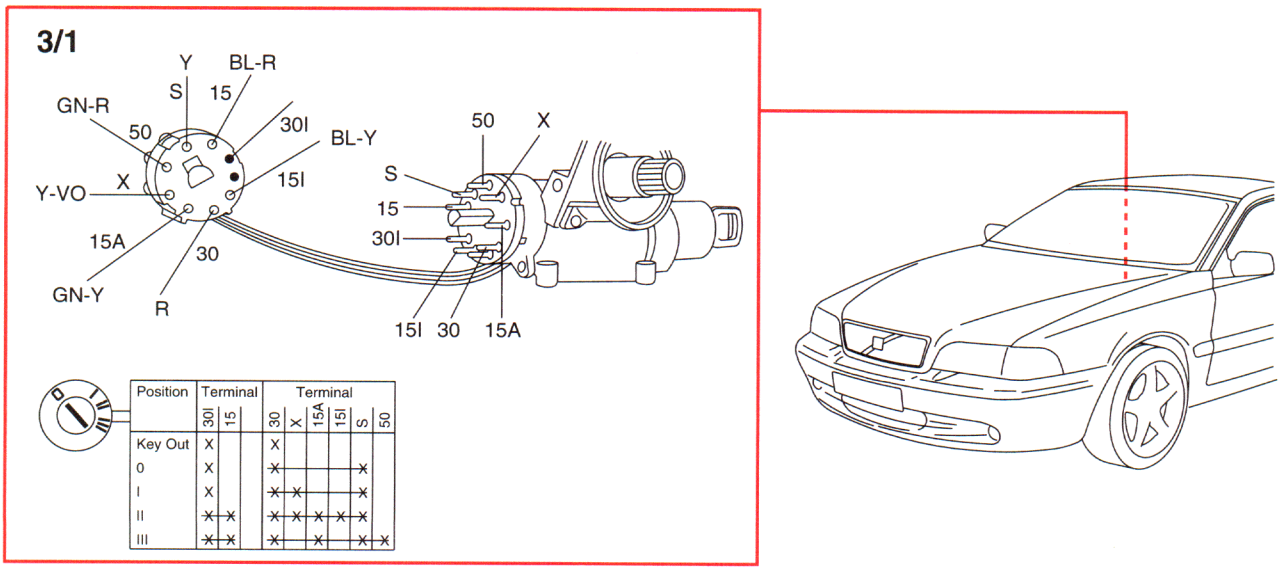

Position	Terminal		Terminal					
	30I	15	30	X	15A	15I	S	50
Key Out	X		X					
0	X		X				X	
I	X		X	X			X	
II	X	X	X	X	X	X	X	
III	X	X	X		X		X	X

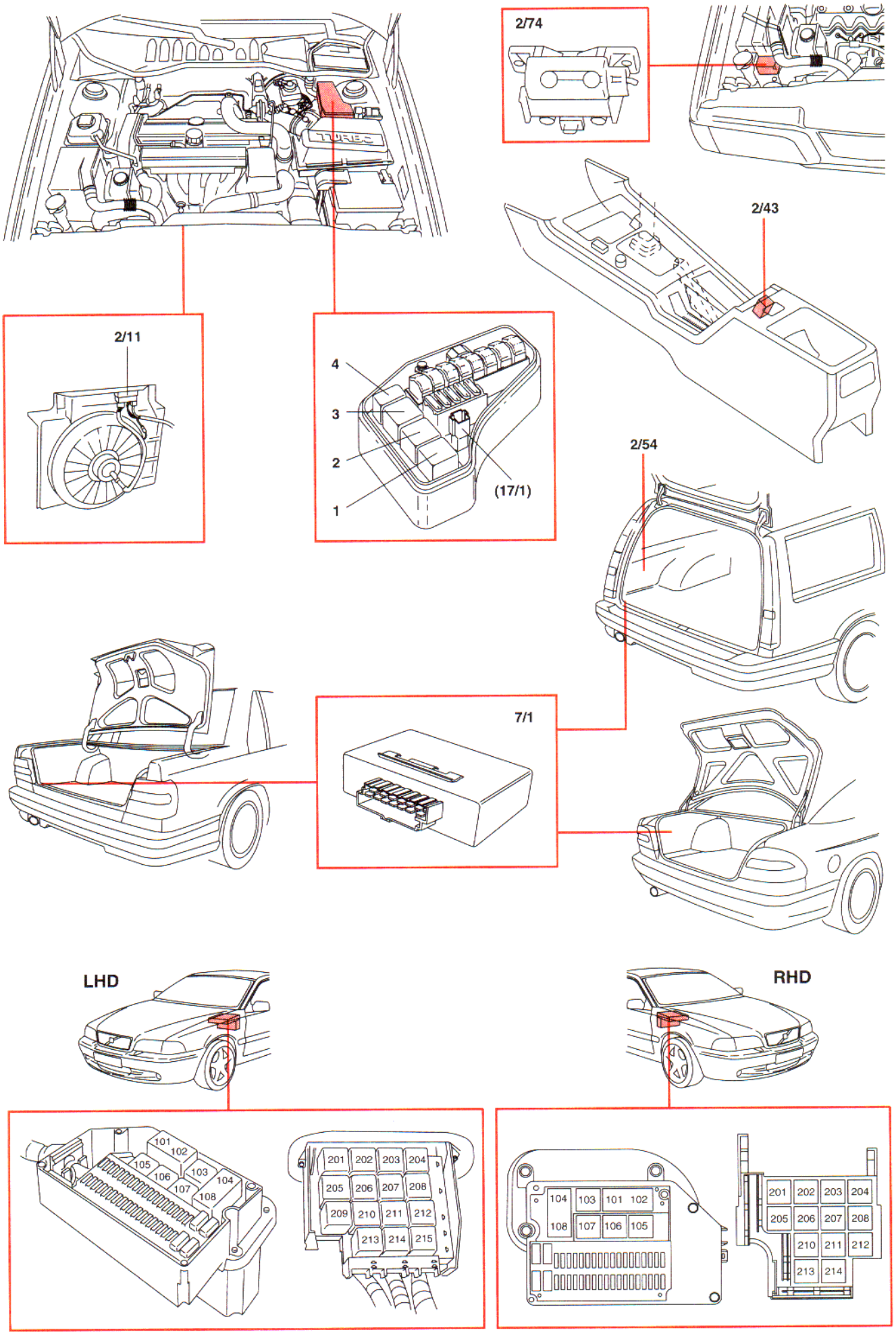
2/74
2/43
2/11
4
3
2
1
(17/1)
2/54
7/1
LHD
RHD
101
102
105
106
103
104
107
108
201
202
203
204
205
206
207
208
209
210
211
212
213
214
215
104
103
101
102
108
107
106
105
201
202
203
204
205
206
207
208
210
211
212
213
214

31/4

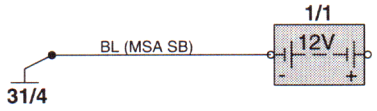

31/5

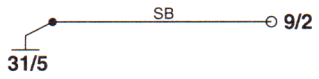

31/7 CONV

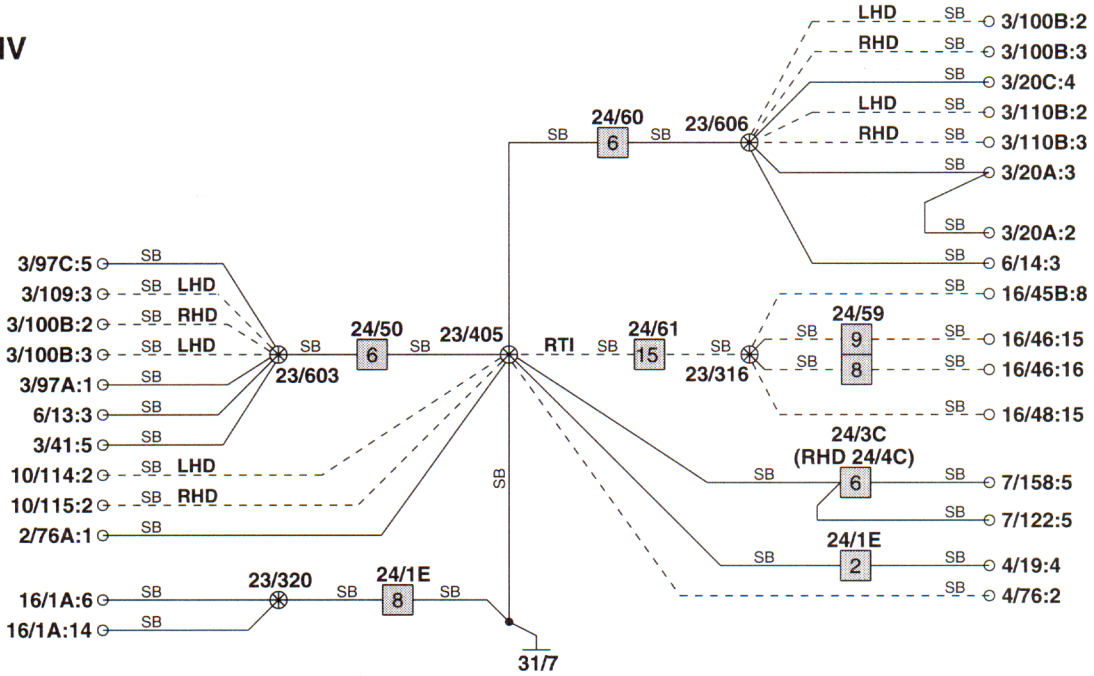

31/7 COUP

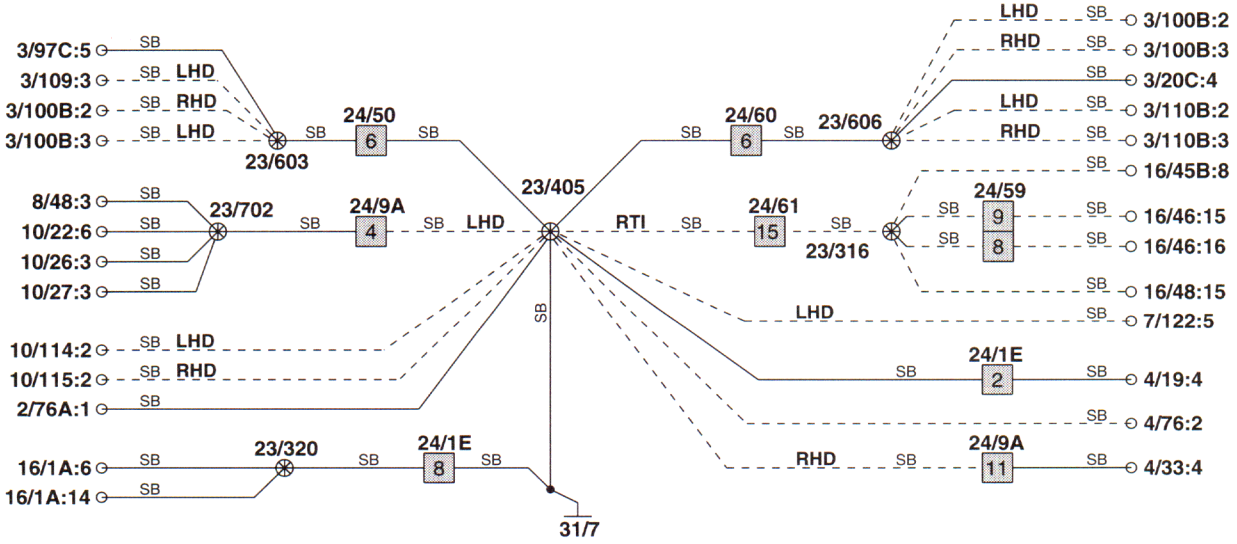

Electrical distribution
Fenix 5.2

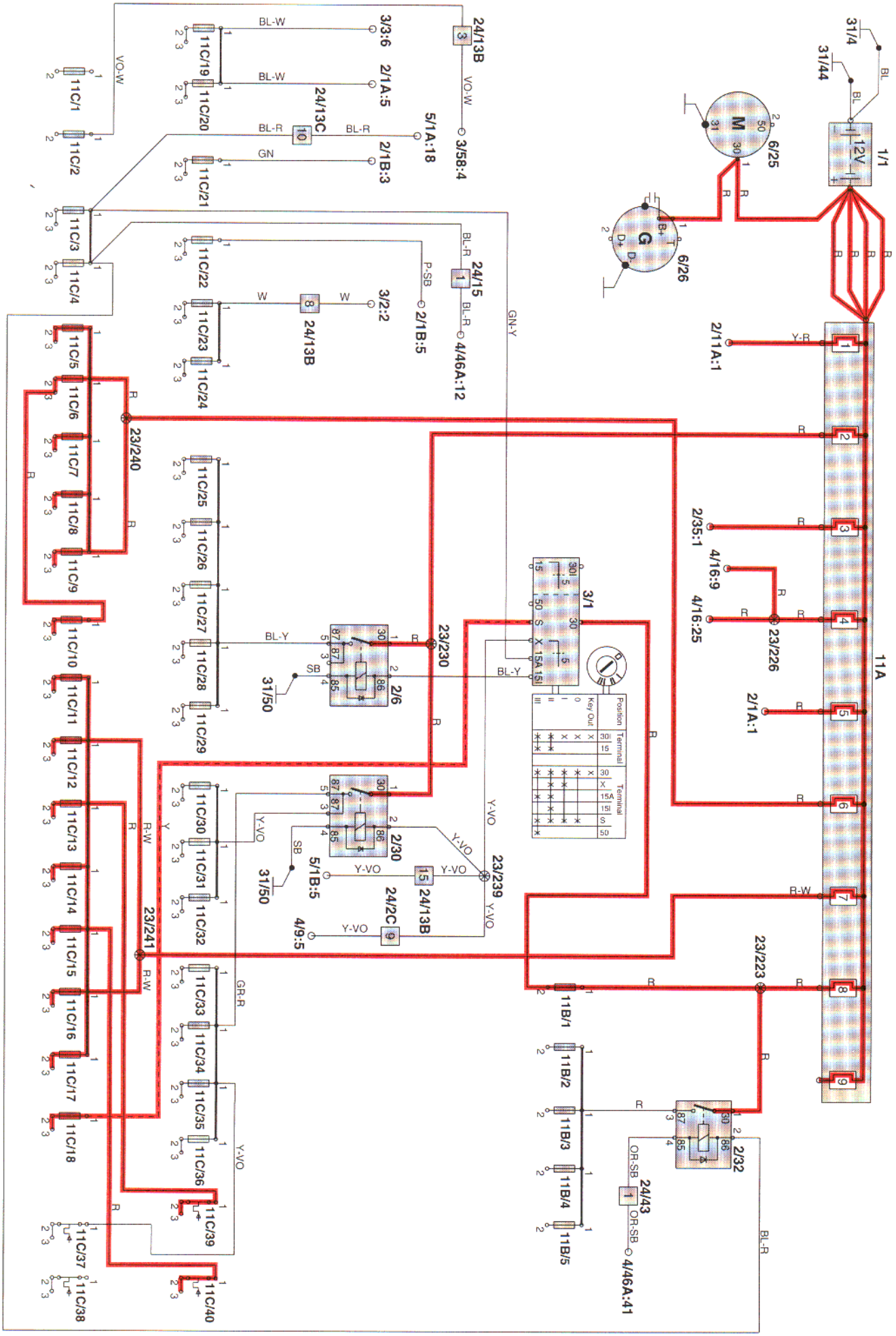

Electrical distribution
Denso, ME7

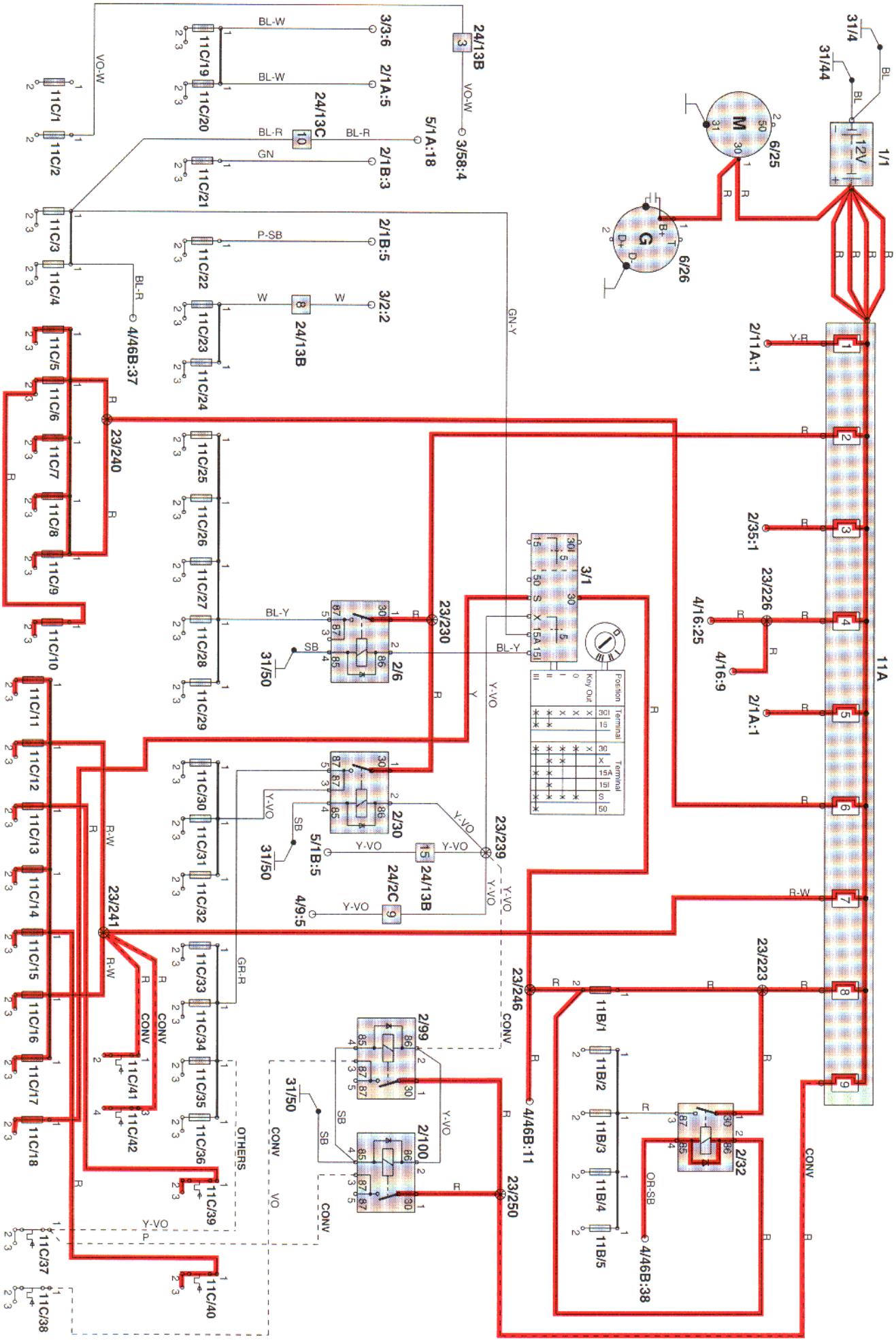

Electrical distribution
MSA 15.7

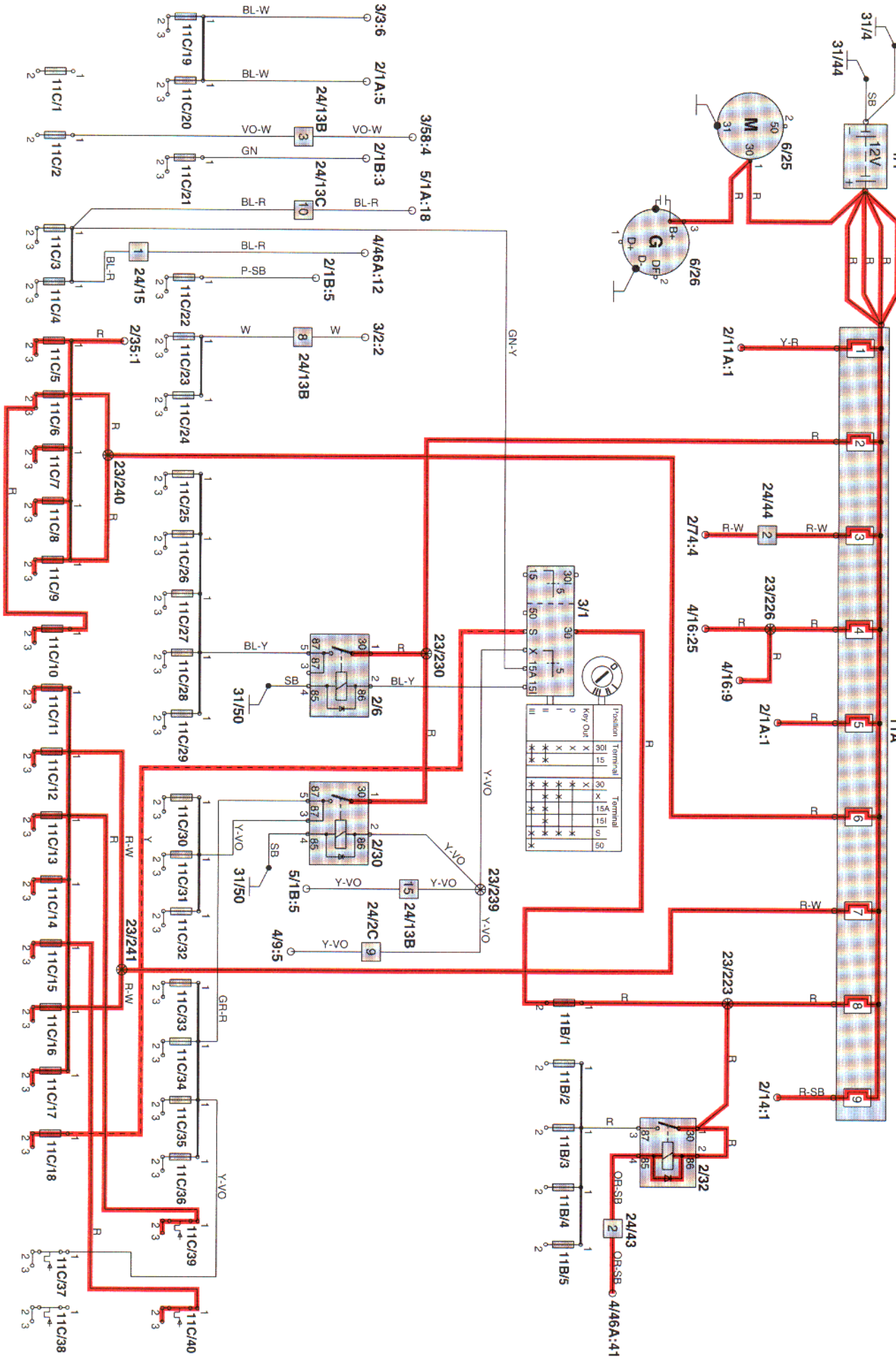

Data communication

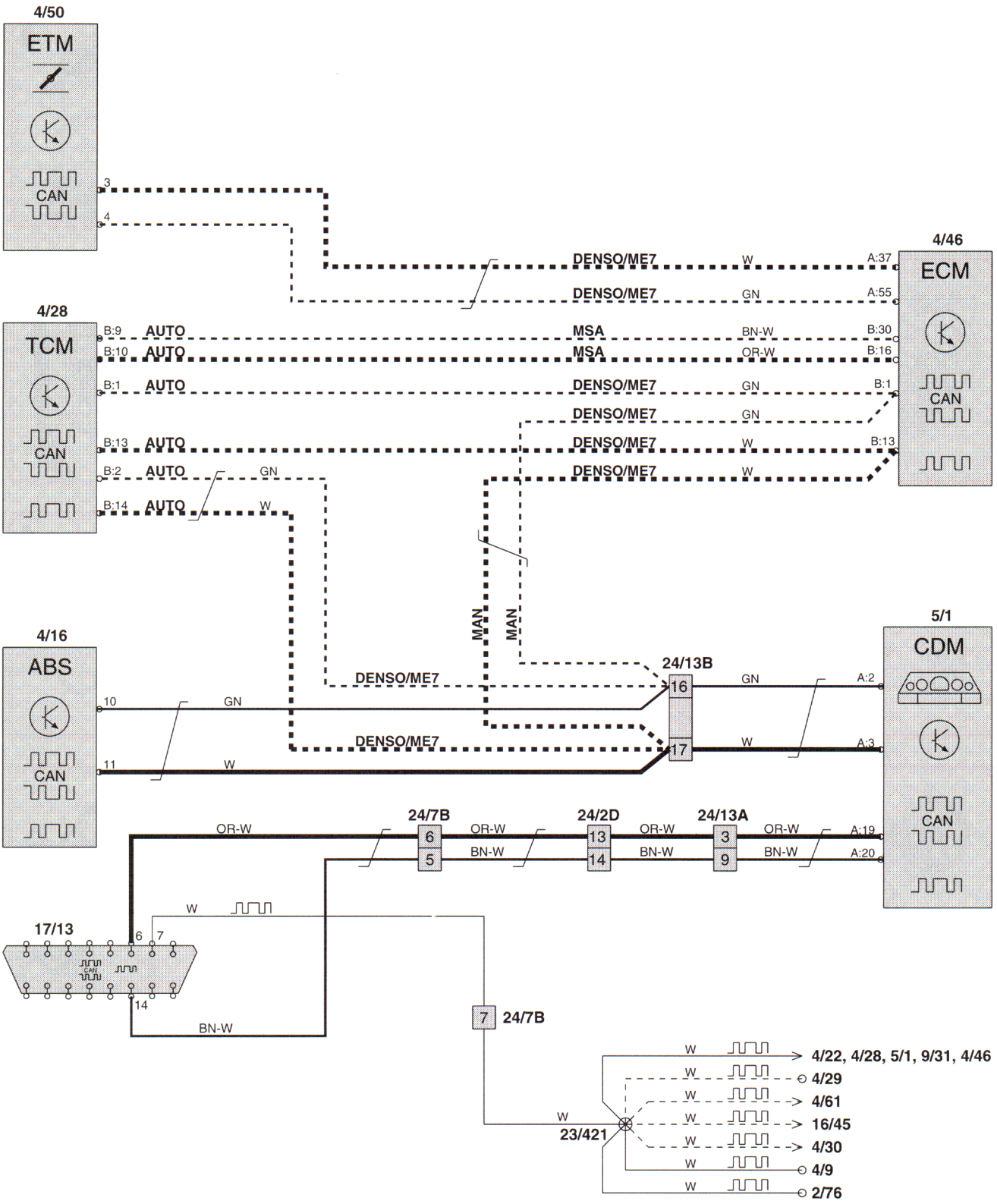

Connector 24/1

24/1A Green 12-pin (male - female)
Firewall cable harness -Instrument panel cable harness

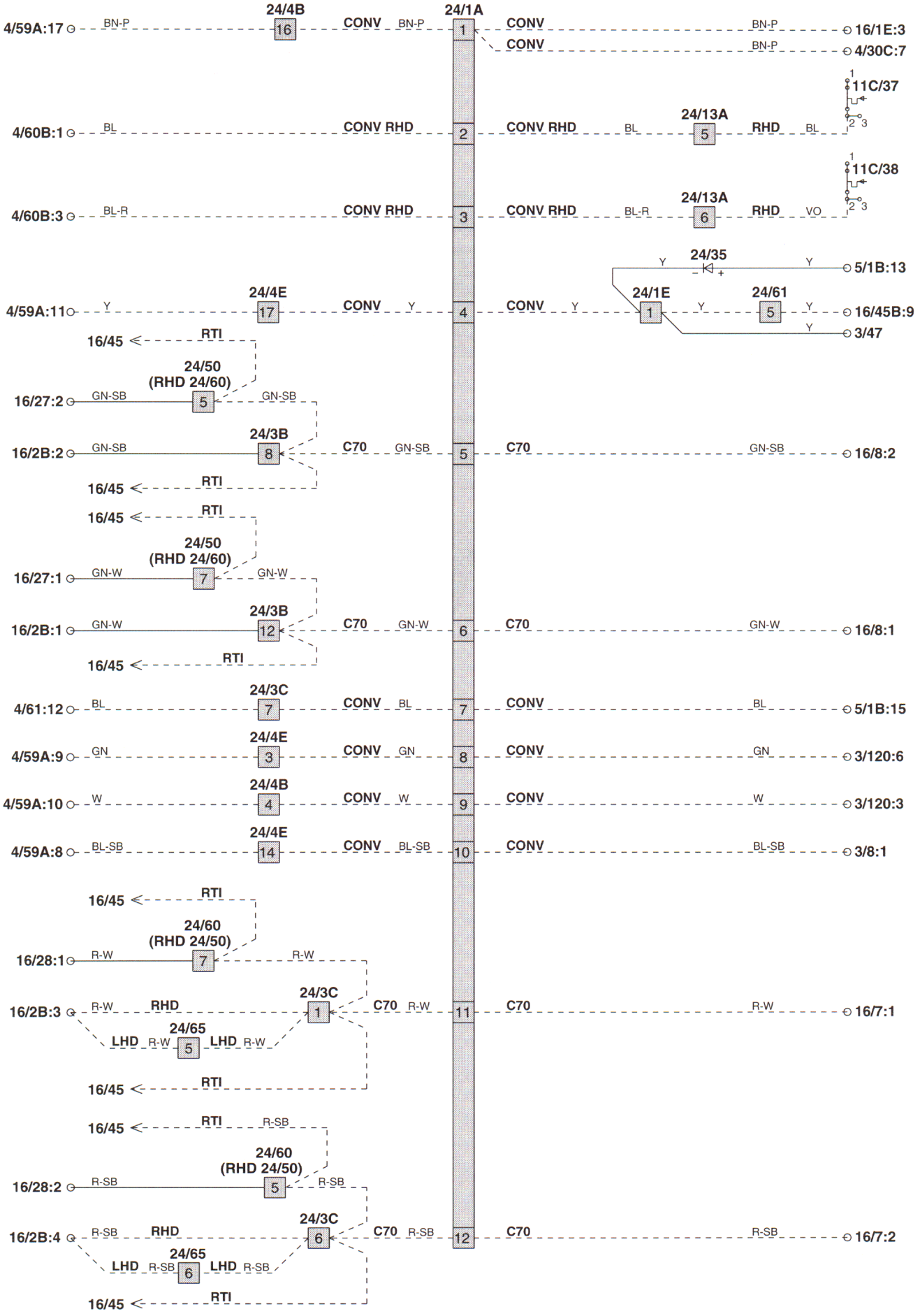

Junction points

23/6 (Engine cable harness)
23/8 (Engine cable harness, FENIX)
23/8 (Engine cable harness, DENSO)
23/8 (Engine cable harness, ME7)

23/6

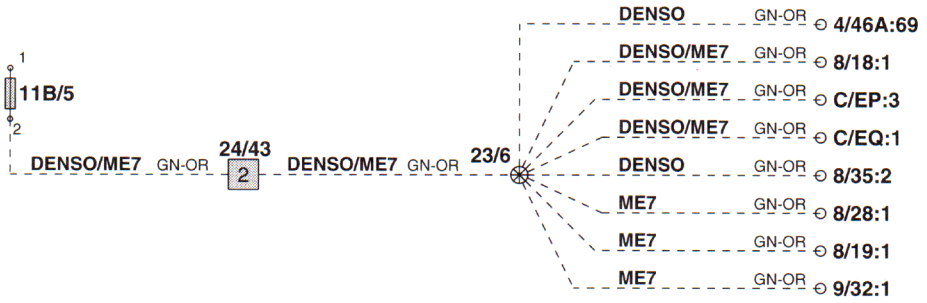

23/8 FENIX

23/8 DENSO

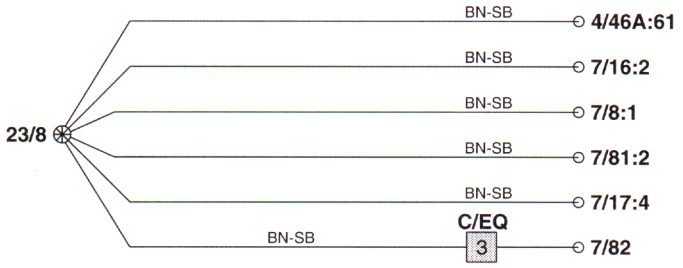

23/8 ME7

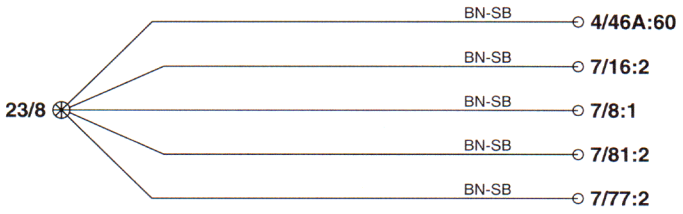

Engine compartment cable harness
Engine cable harness

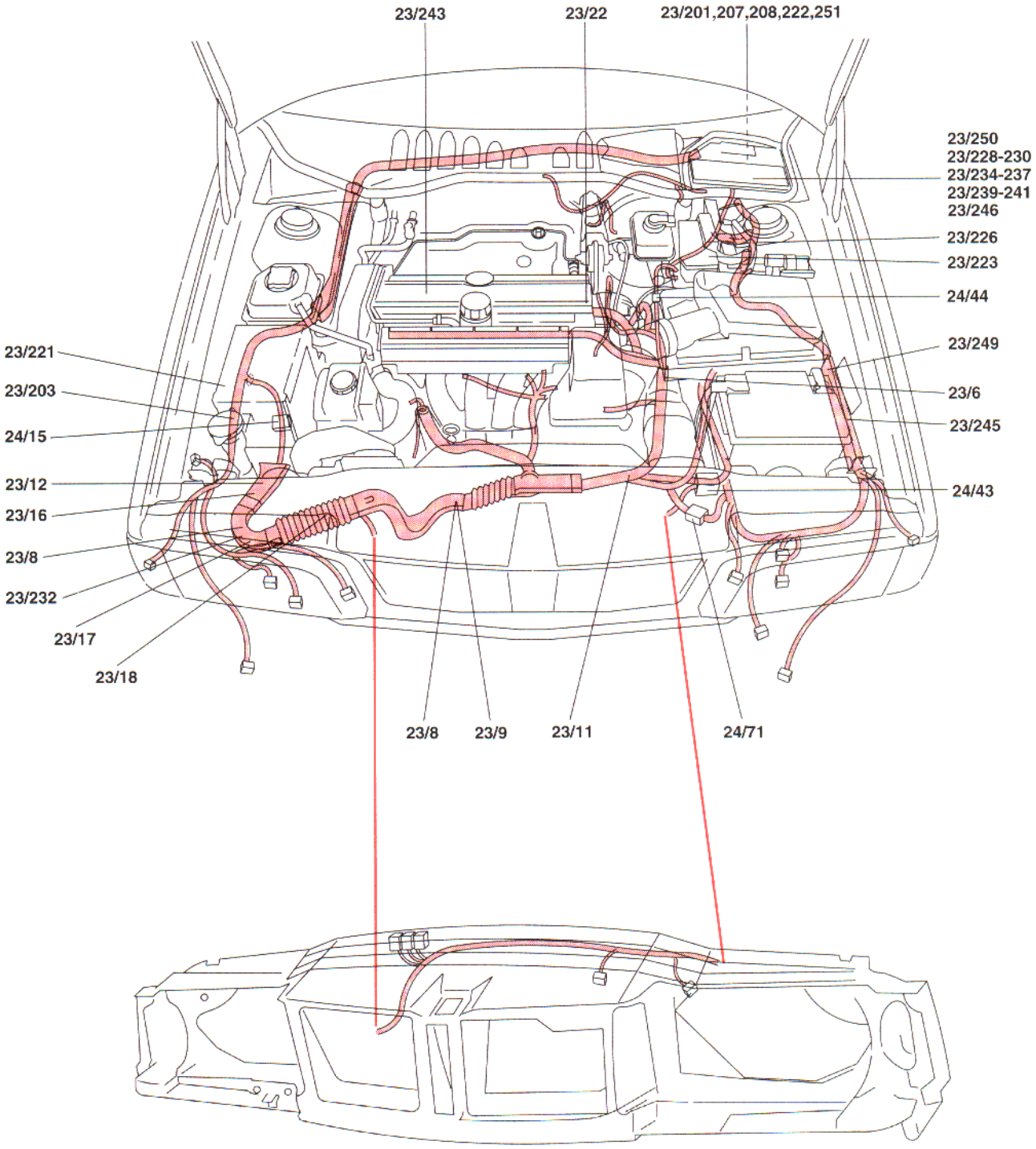

Engine management system
Fenix 5.2

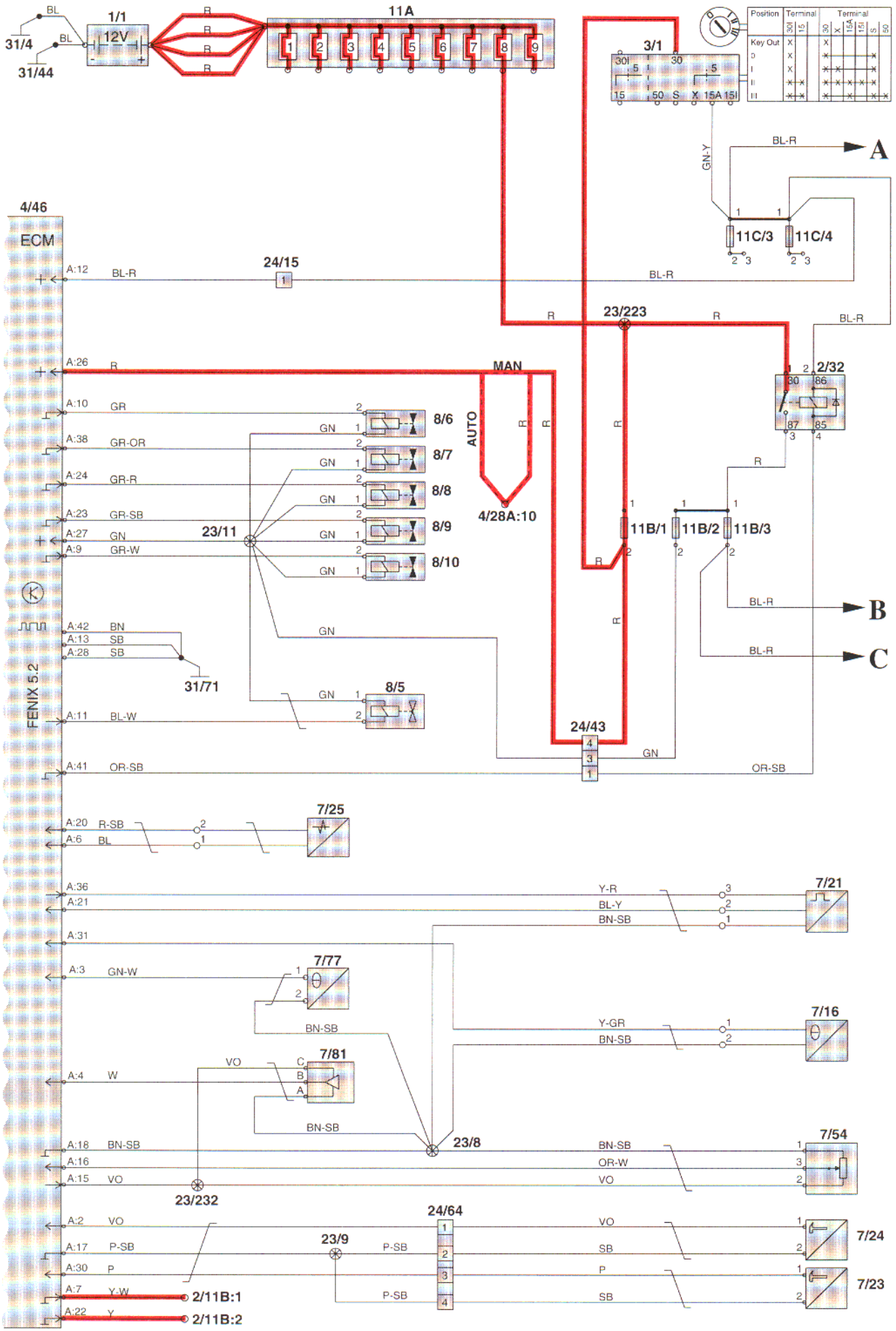

Engine management system
Denso

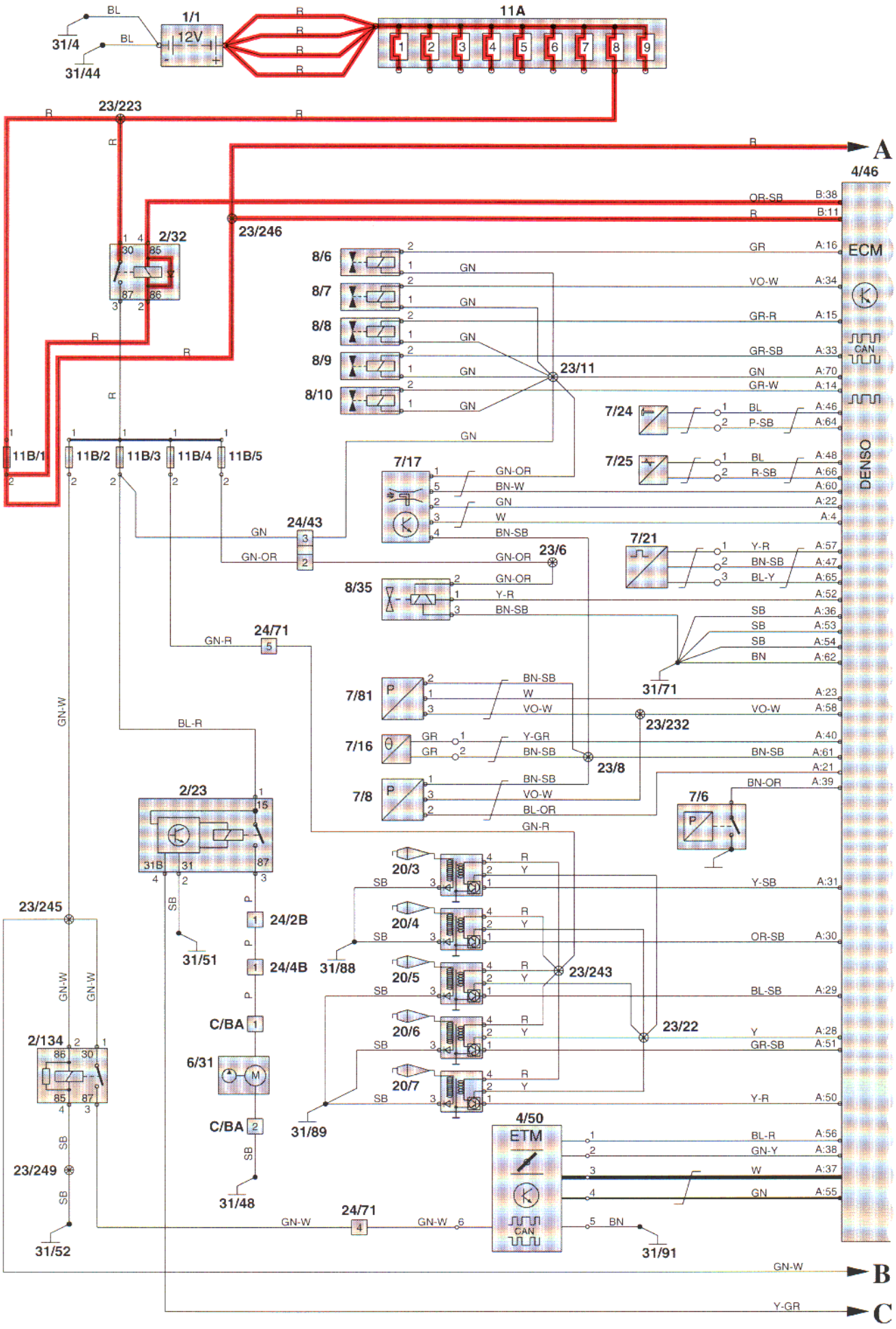

Engine management system
ME7

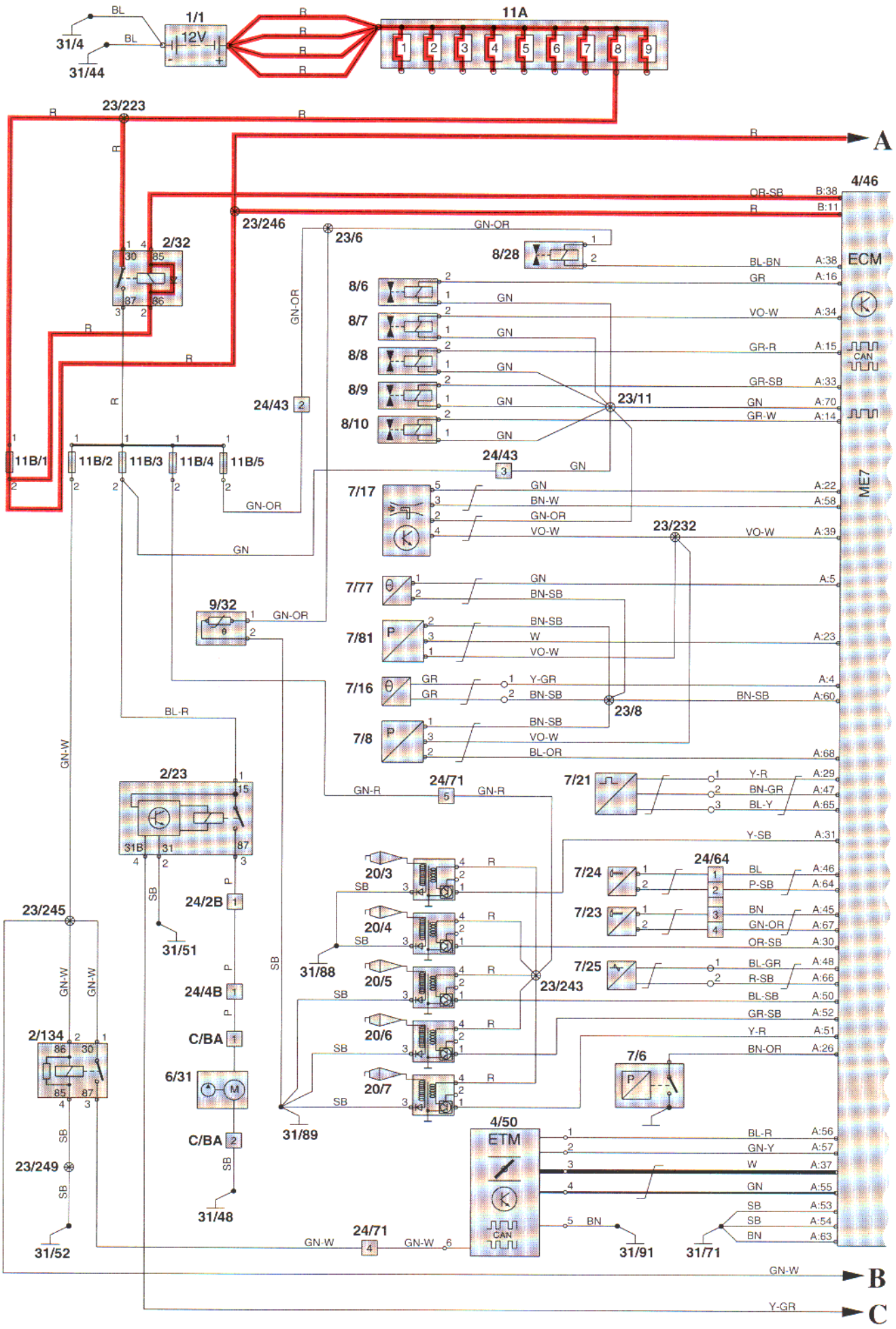

Emissions control
Fenix 5.2

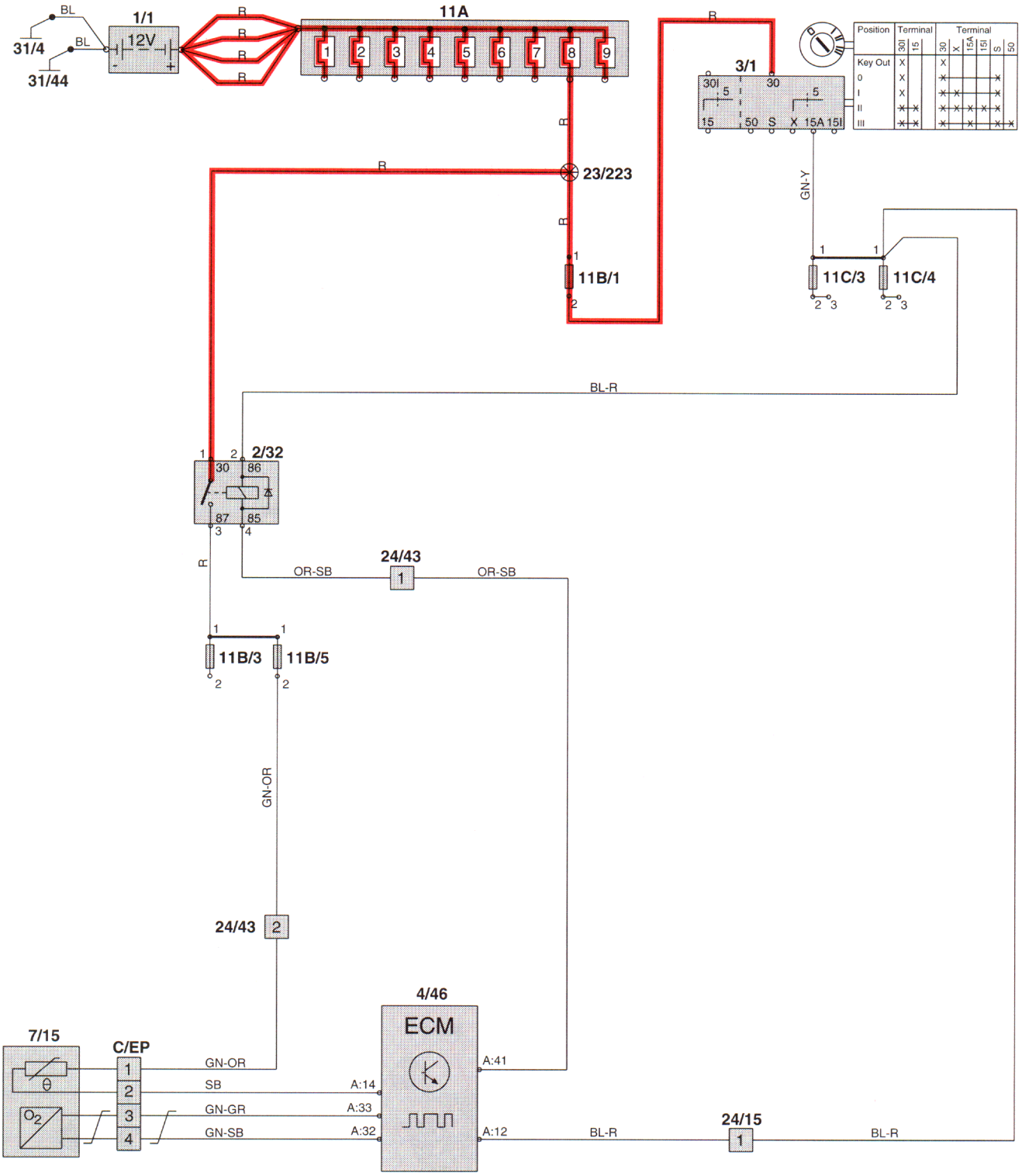

Emissions control
Denso

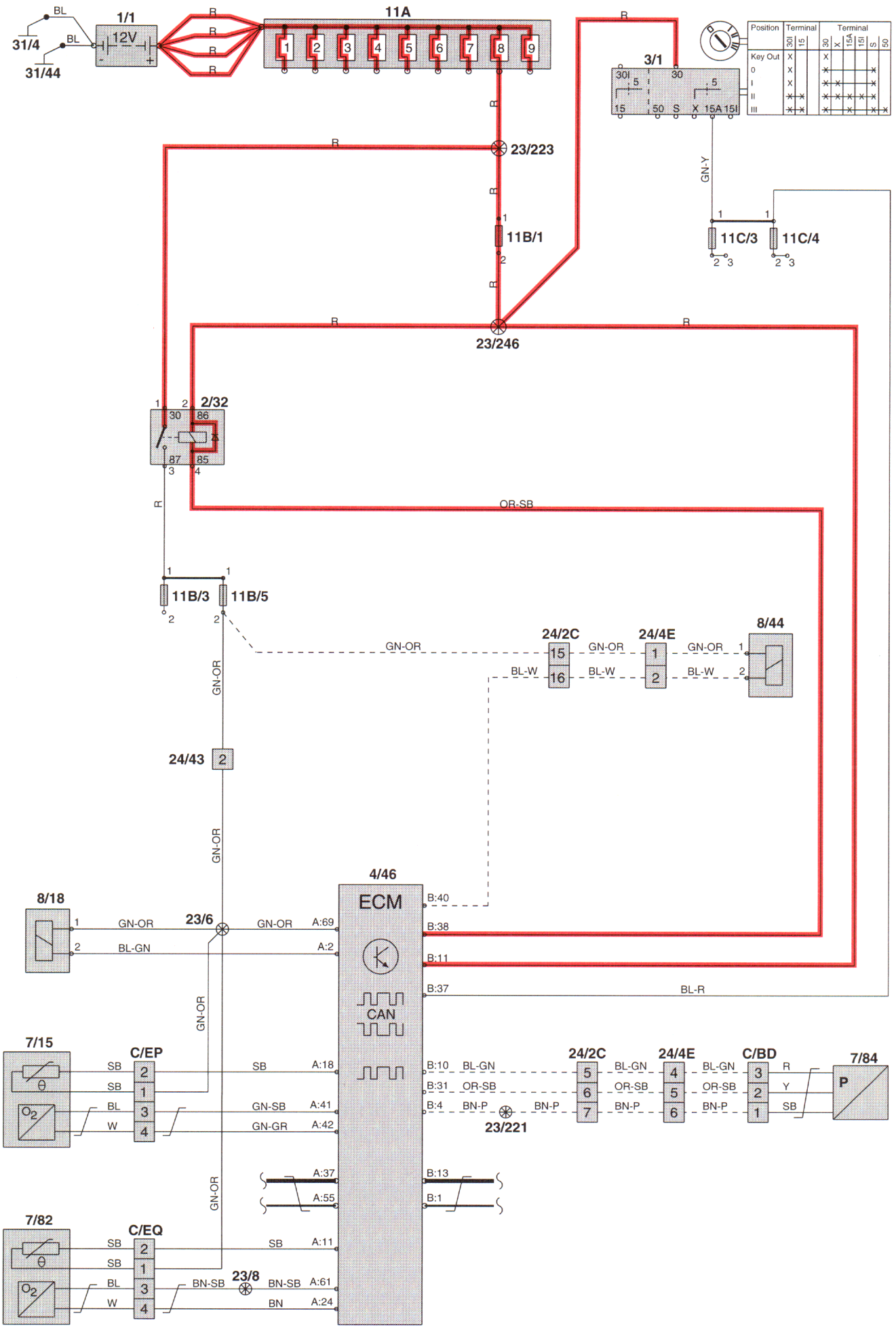

Emissions control
ME7

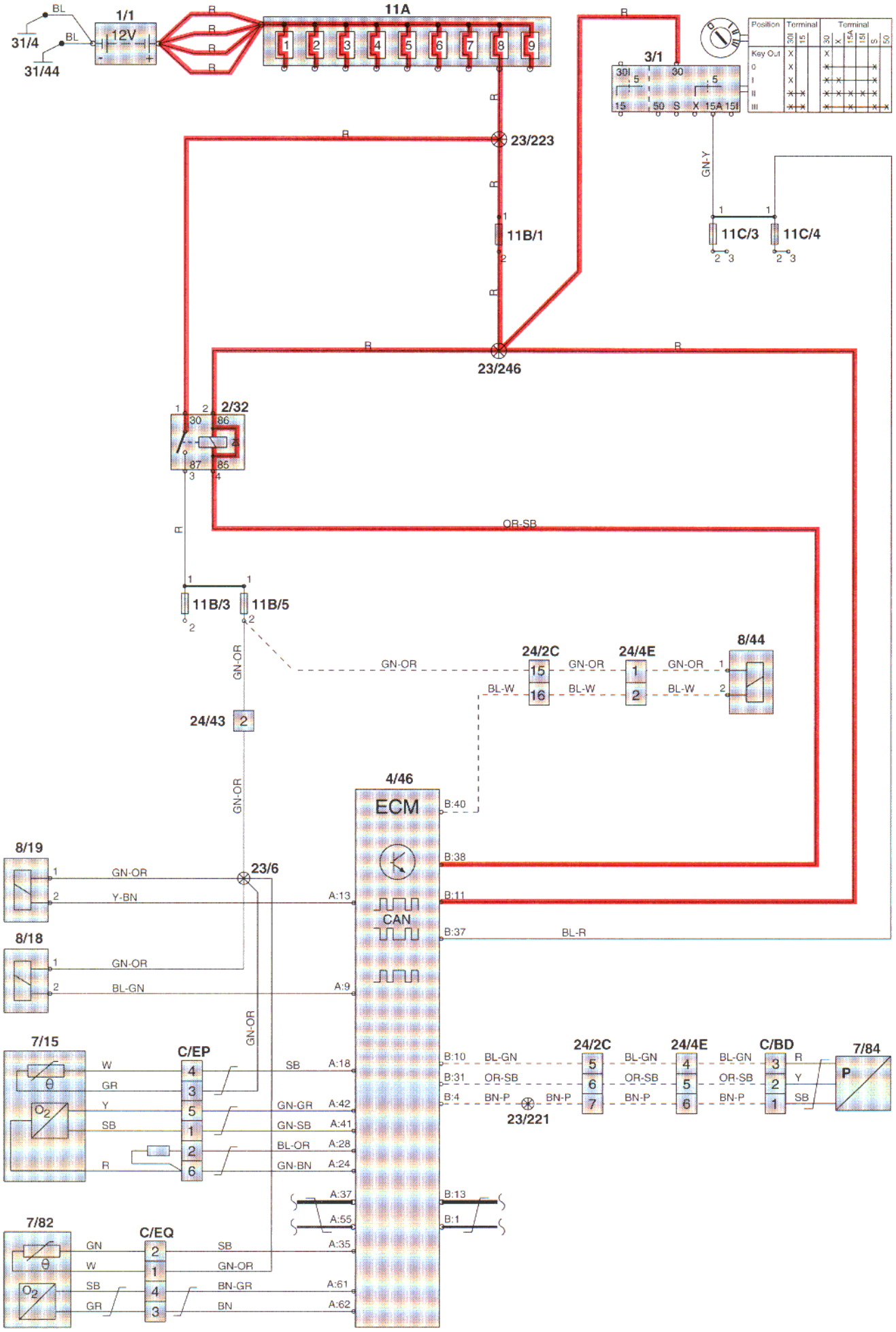

Engine management system
MSA 15.7

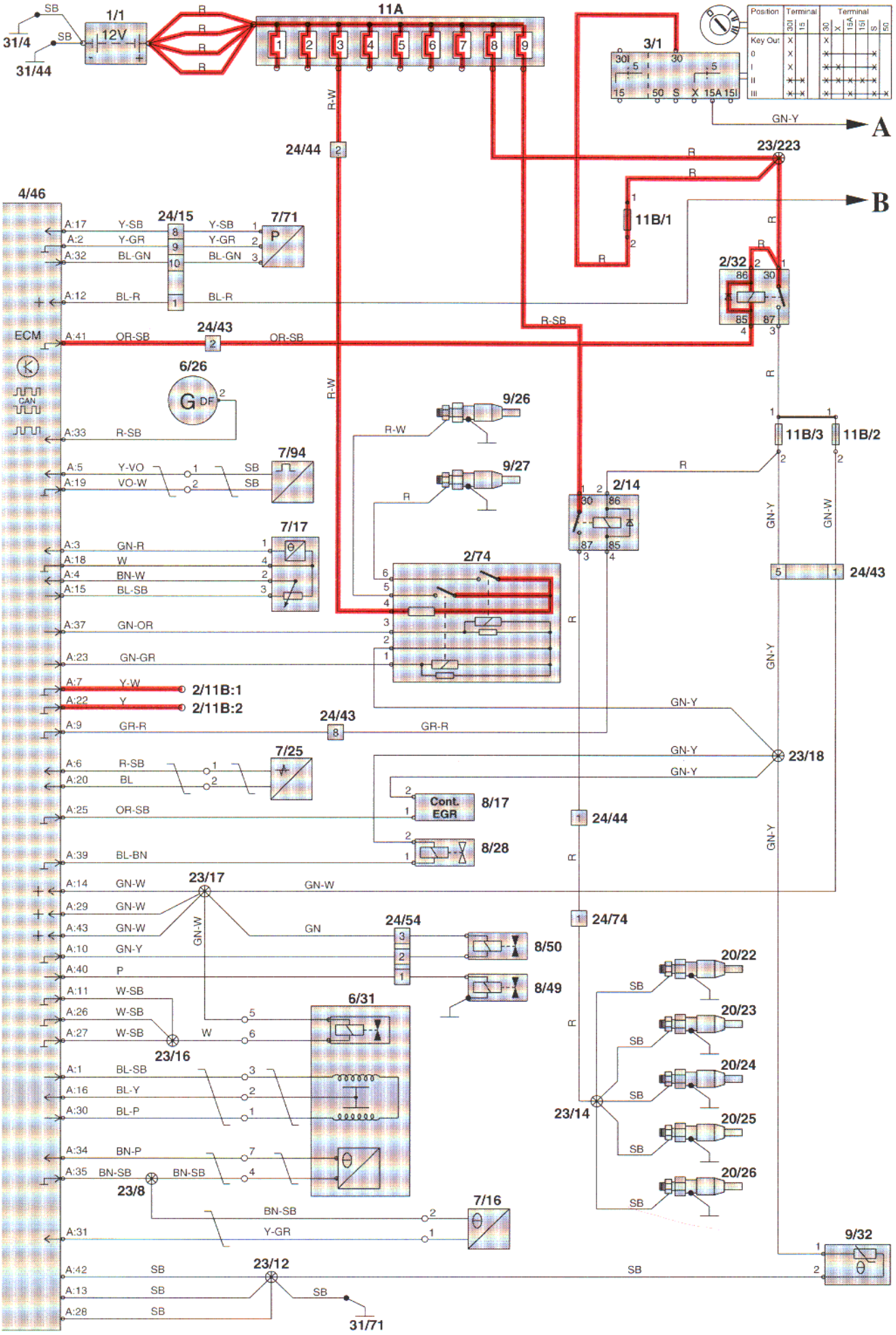

Engine cooling fan (FC)
Fenix 5.2

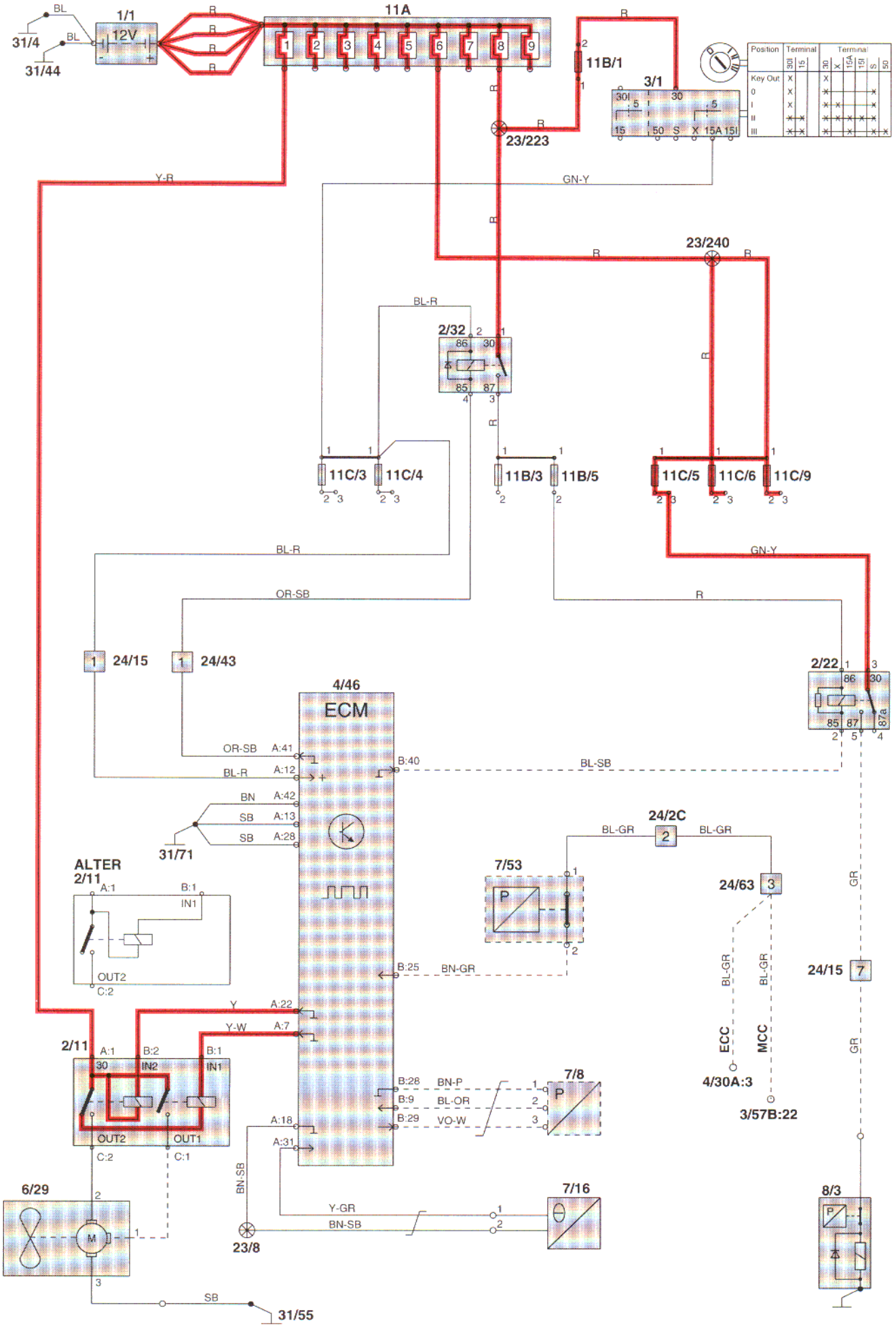

Engine cooling fan (FC)
Denso, ME7

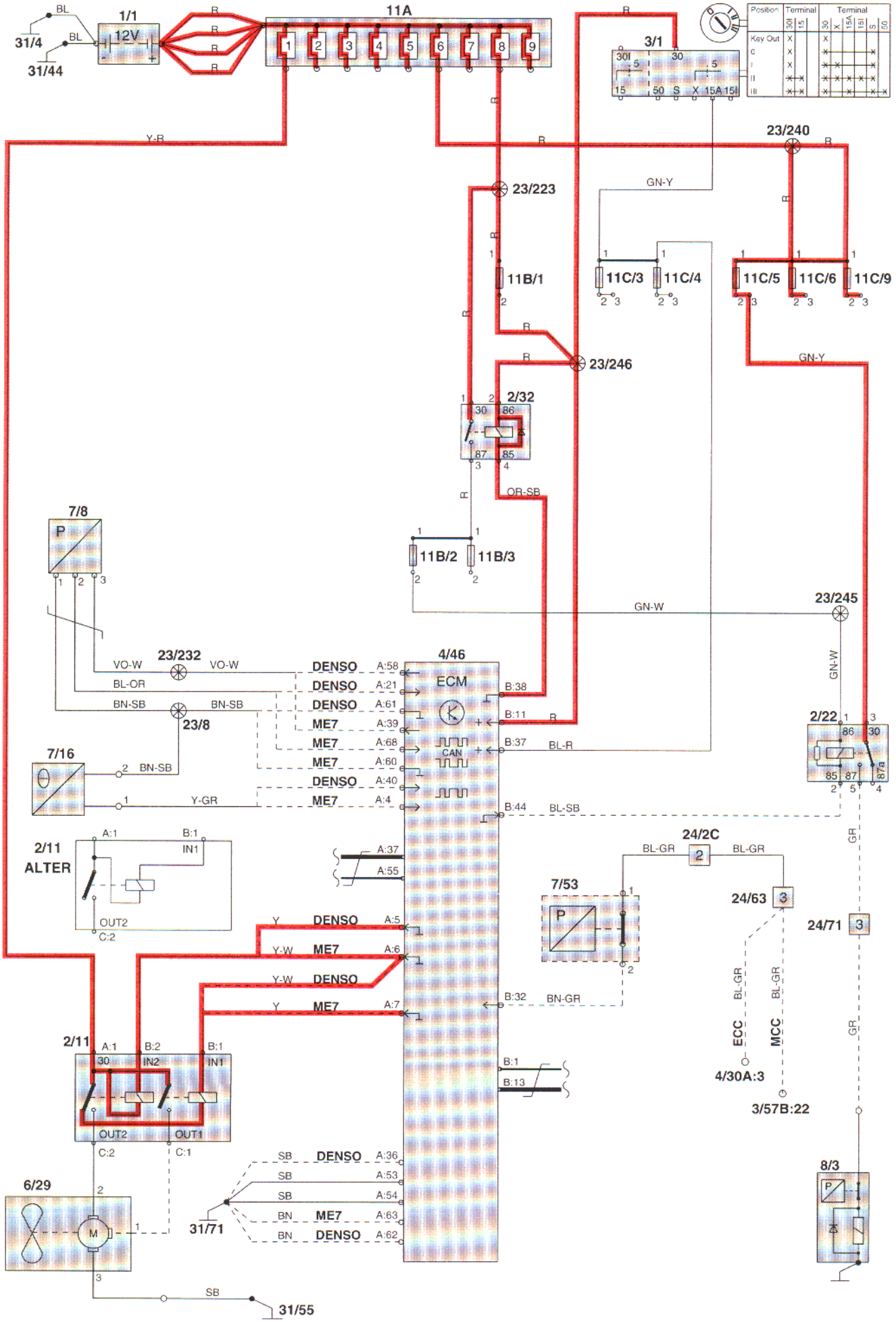

Engine cooling fan (FC)
MSA 15.7

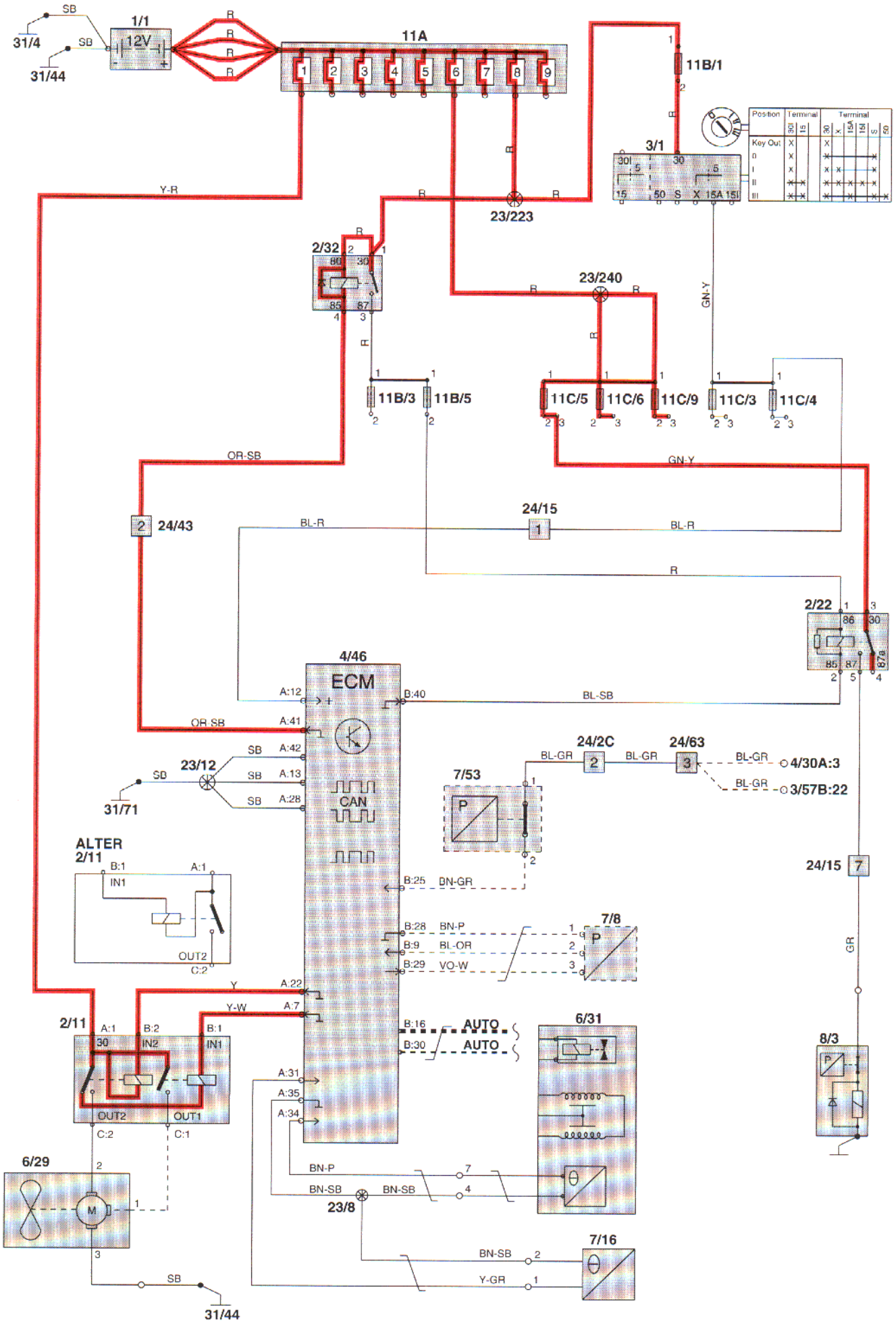

Cruise control
Fenix 5.2

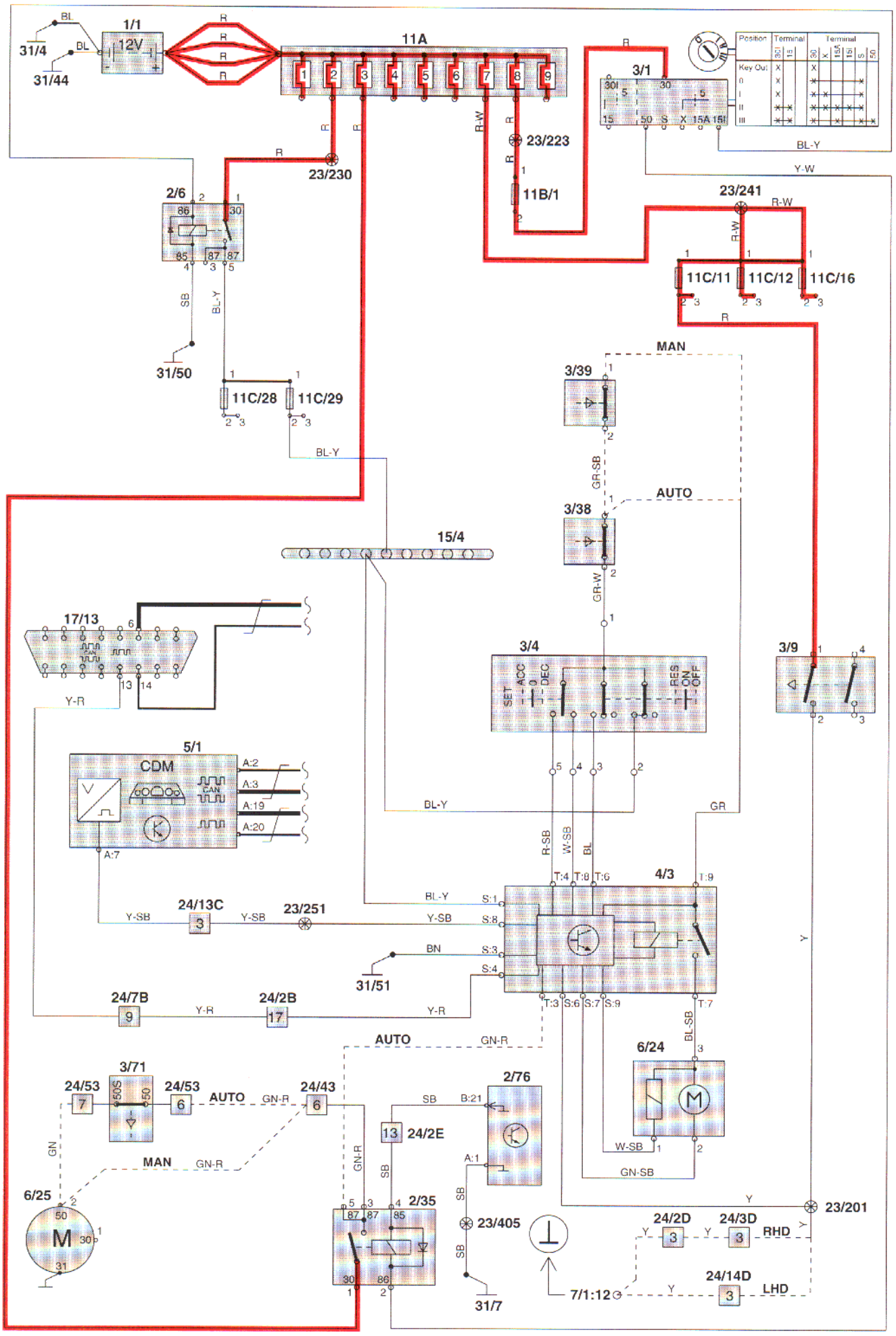

Cruise control
Denso, ME7

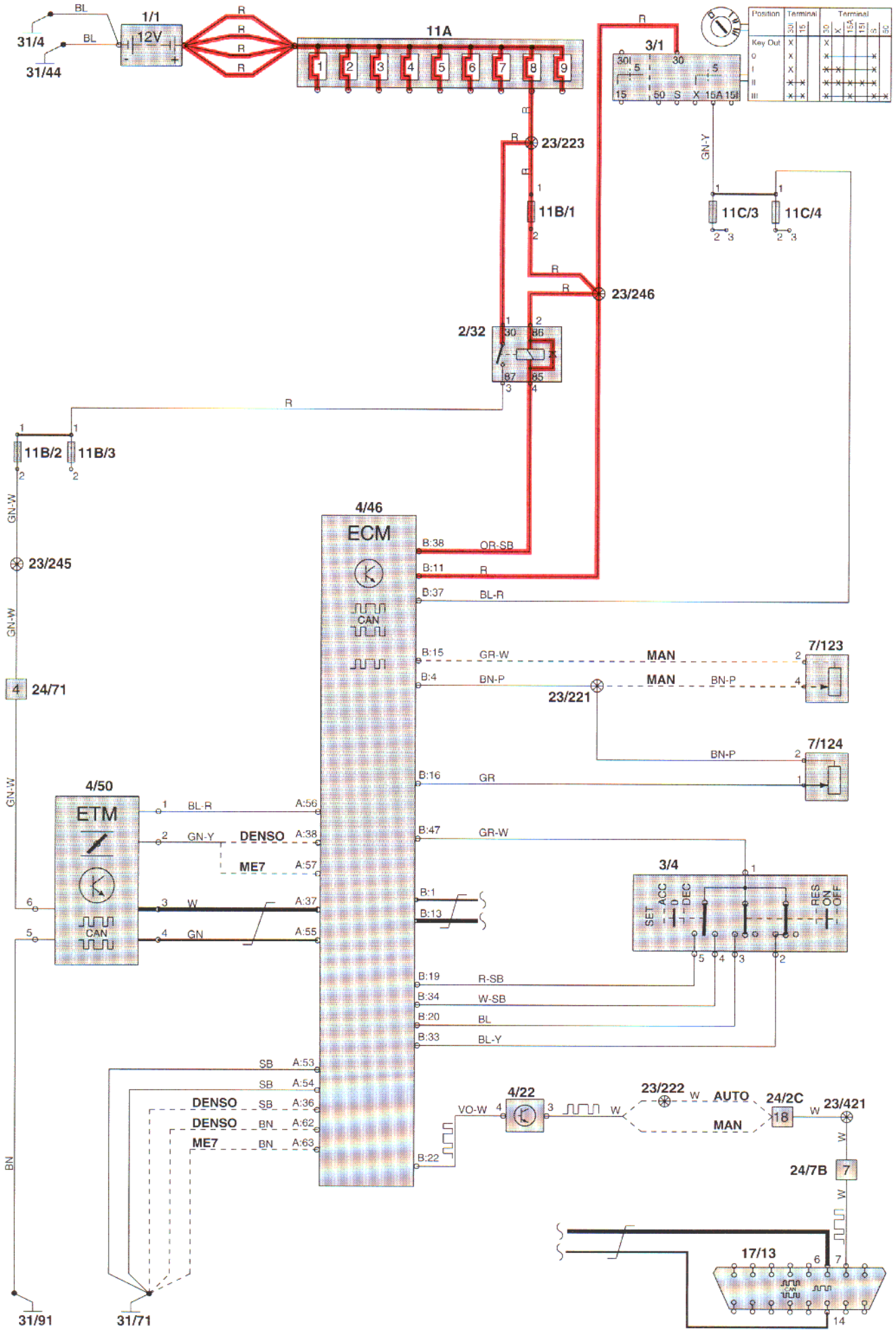

Cruise control
MSA 15.7

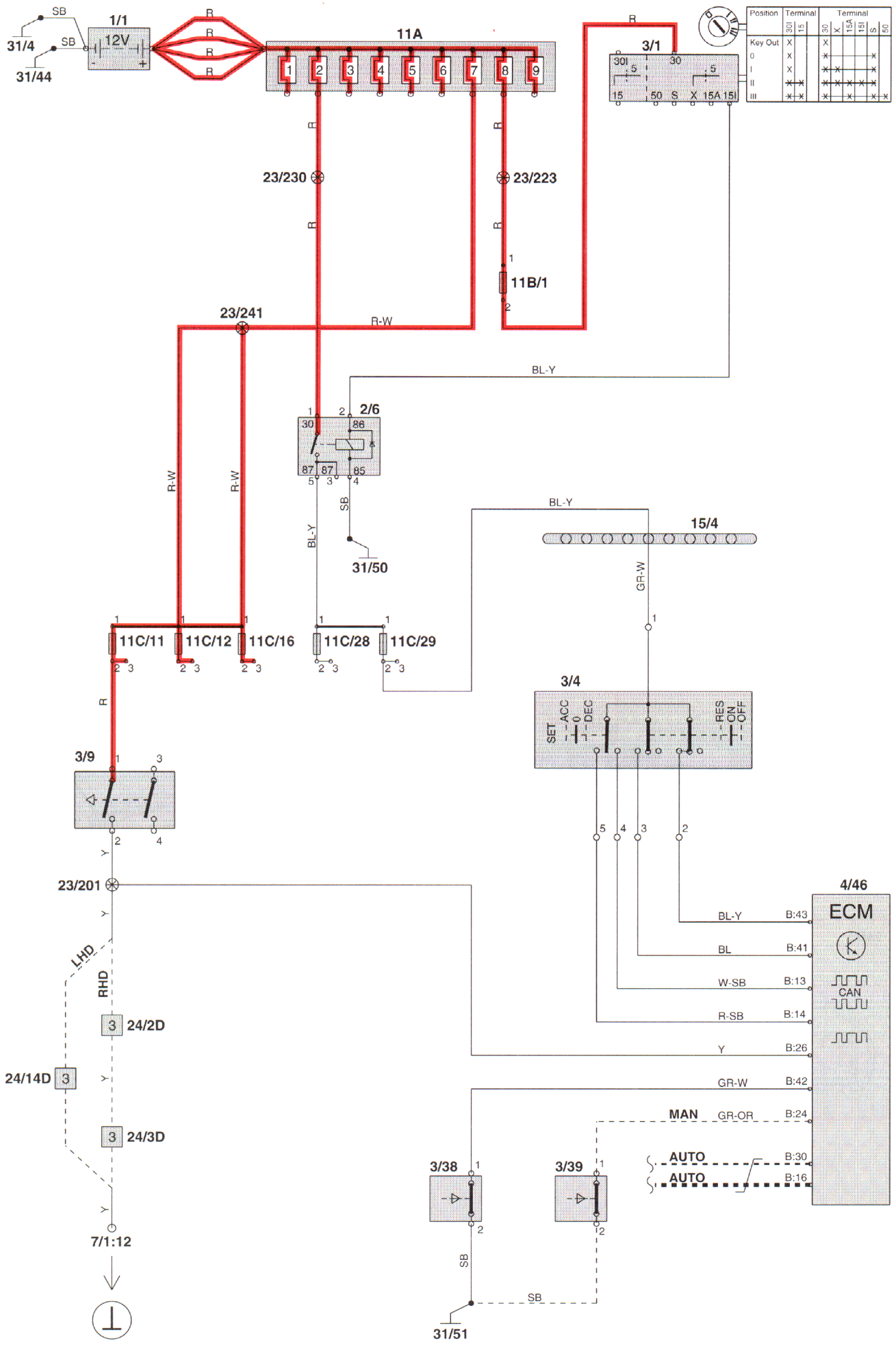

Power supply and starter system

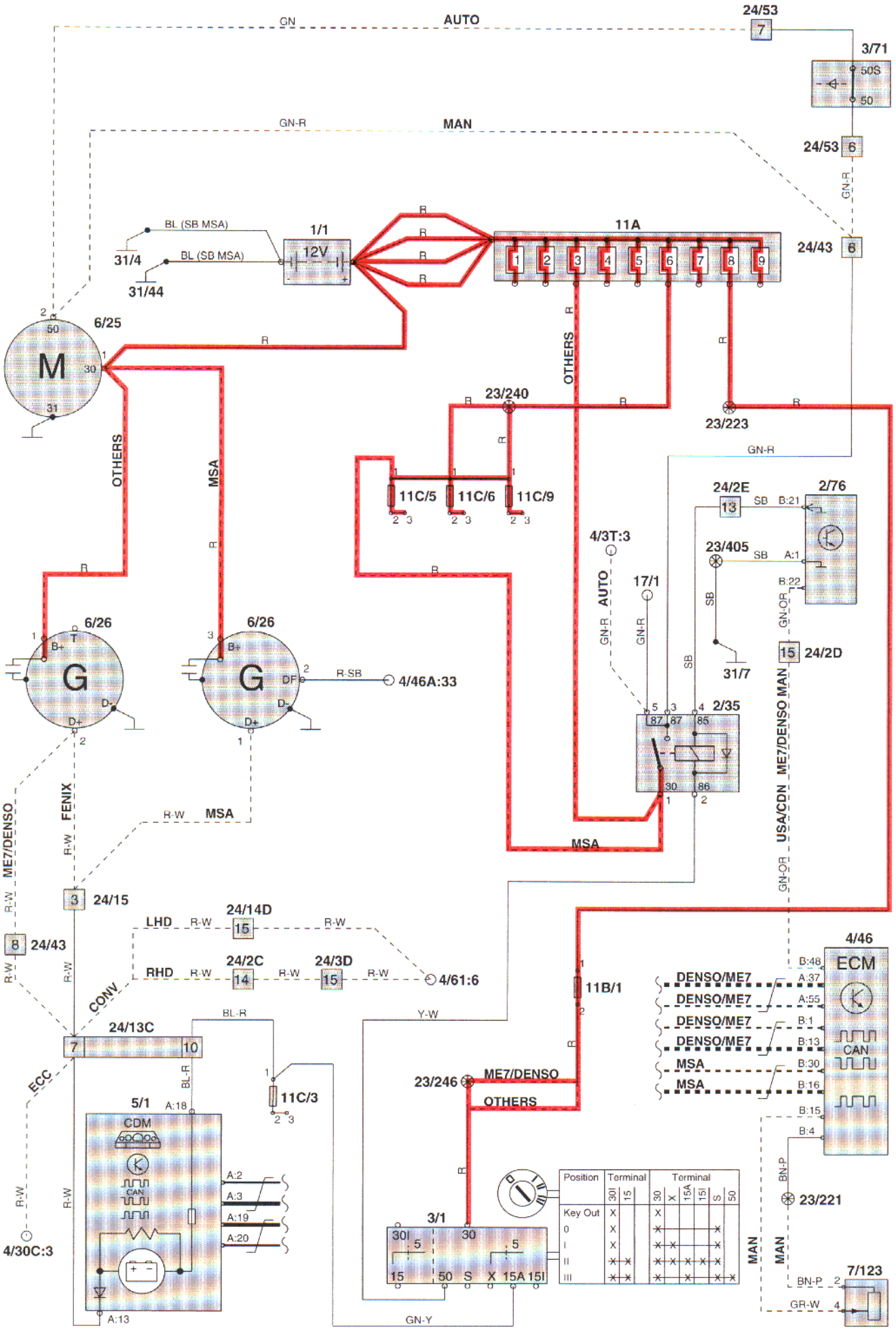

High and low beams

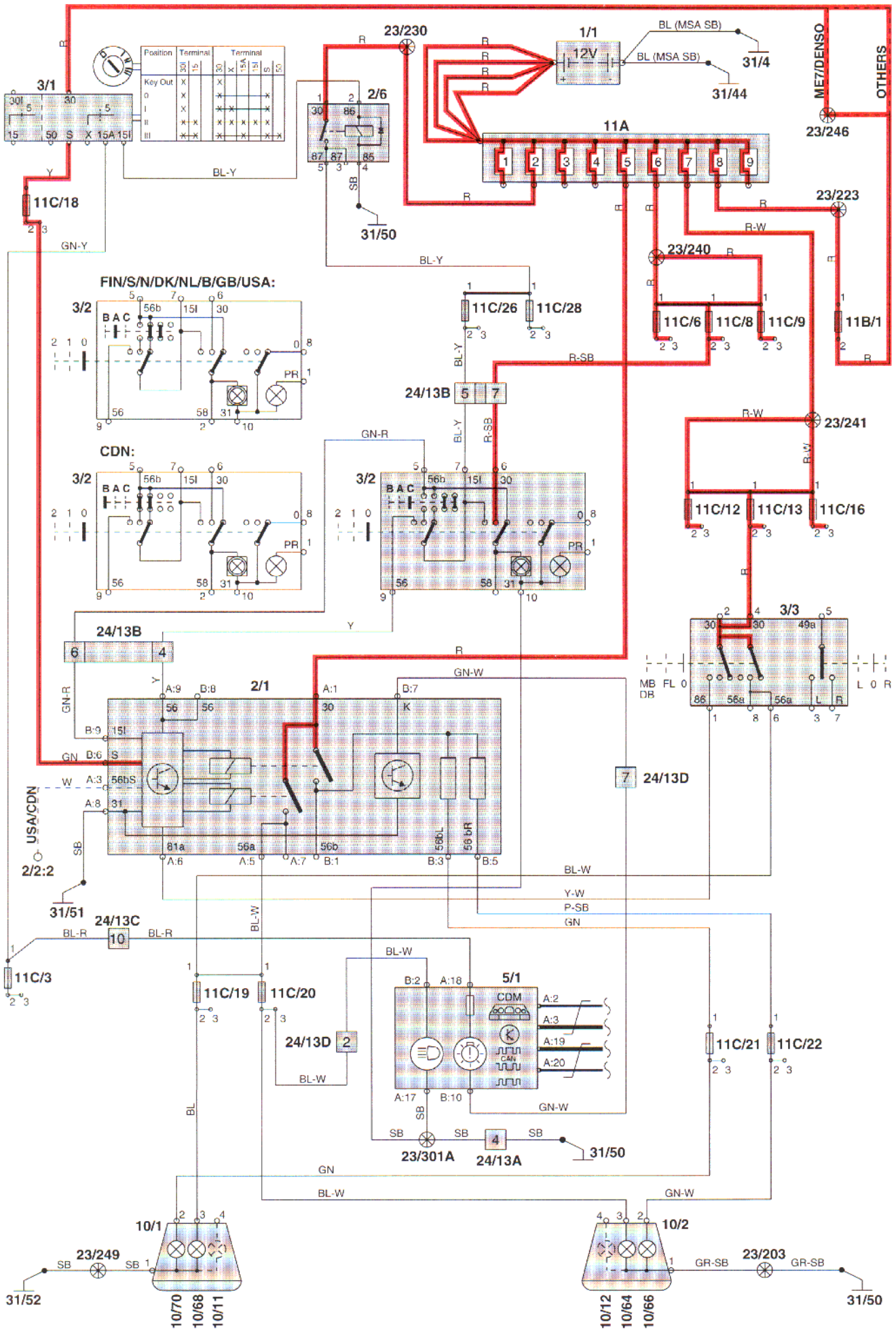

Headlamp range adjustment

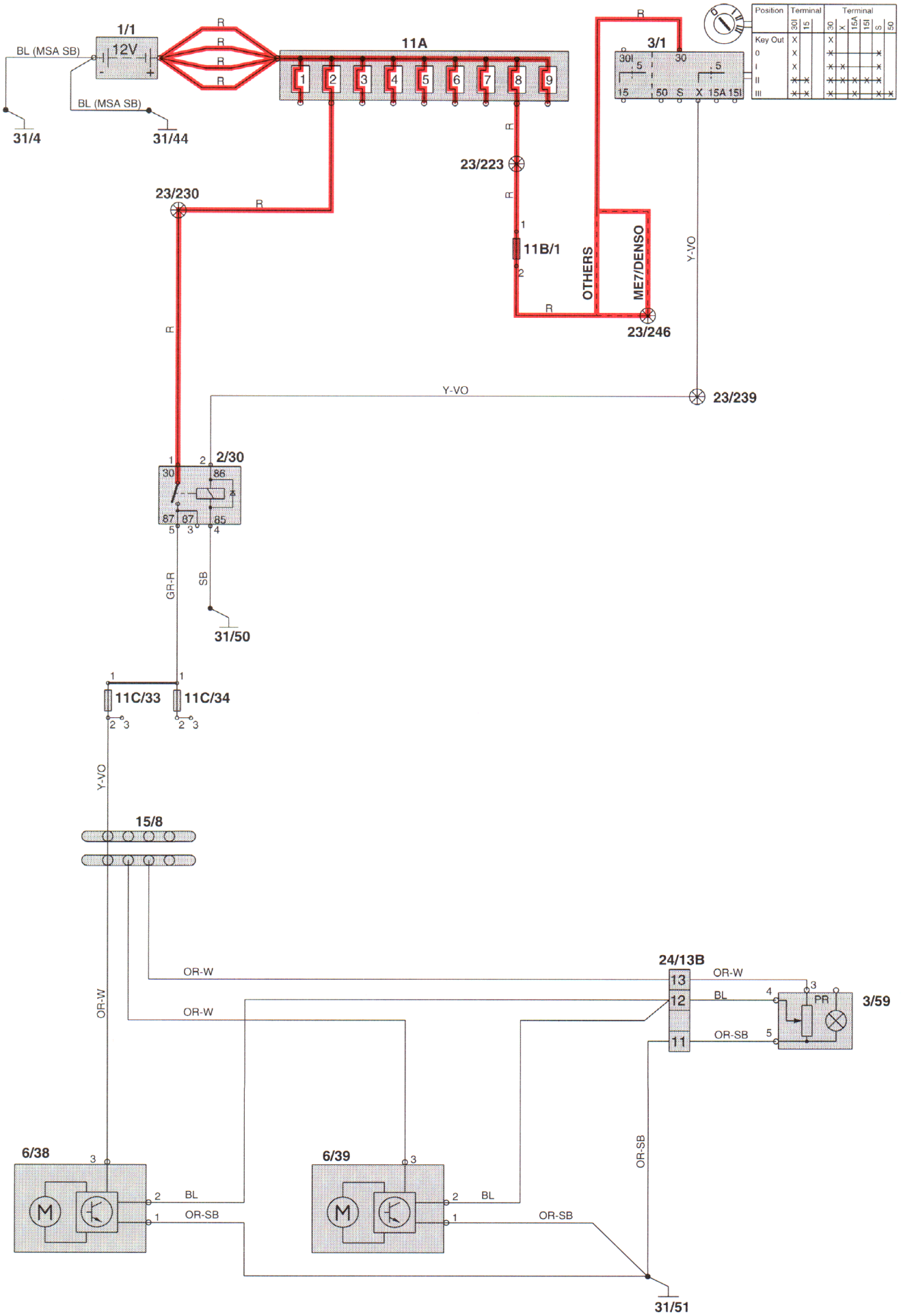

Fog lamp
C70

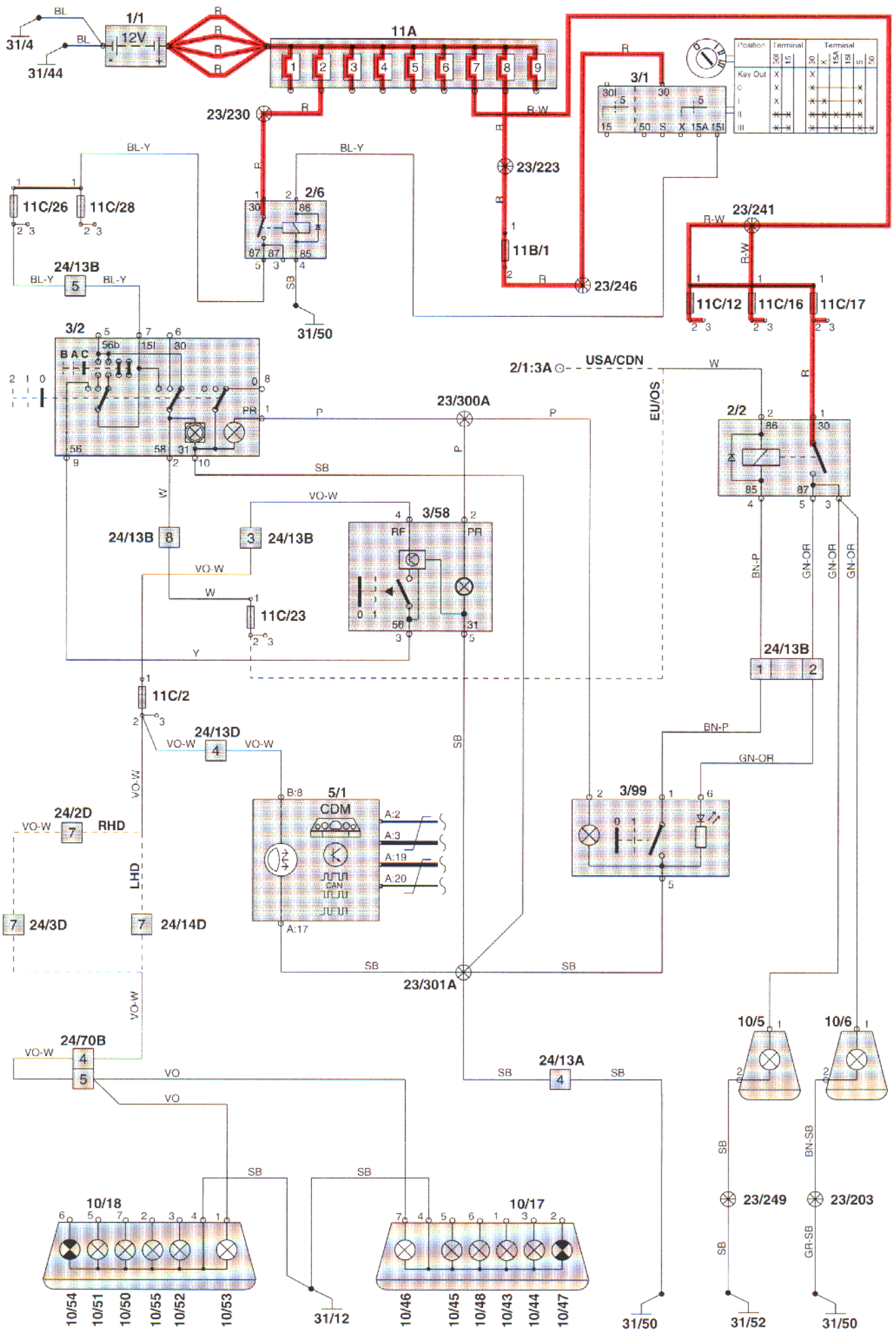
31/4
31/44
BL
1/1
12V
11A
23/230
23/223
3/1
23/241
23/246
11B/1
11C/26
11C/28
2/6
24/13B
31/50
3/2
23/300A
2/1:3A
USA/CDN
EU/OS
2/2
11C/12
11C/16
11C/17
3/58
11C/23
11C/2
24/13D
5/1
CDM
3/99
24/2D
RHD
LHD
24/3D
24/14D
23/301A
24/70B
24/13A
10/5
10/6
10/18
10/17
23/249
23/203
10/54
10/51
10/50
10/55
10/52
10/53
31/12
10/46
10/45
10/48
10/43
10/44
10/47
31/50
31/52
31/50

Fog lamp
S70, V70

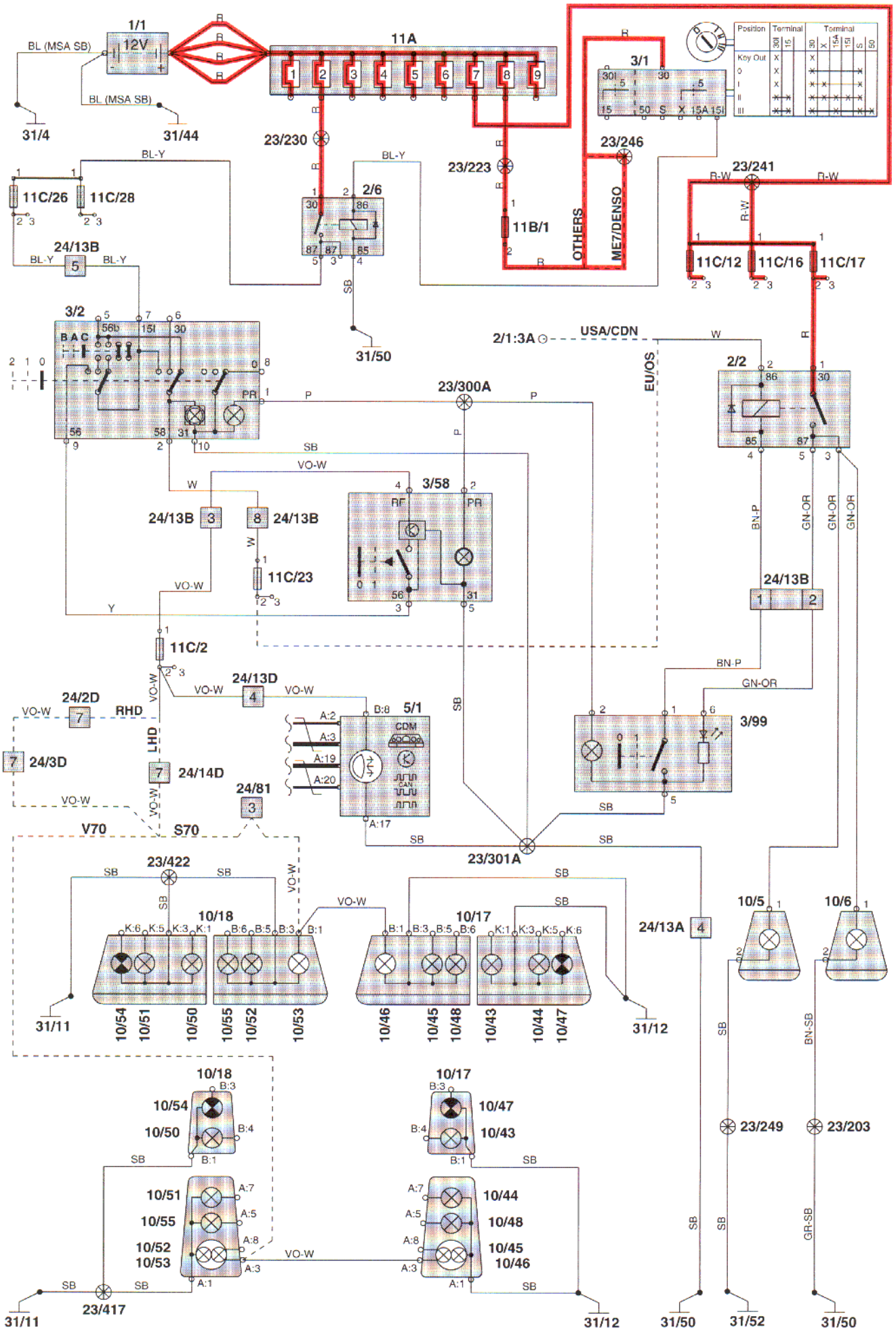

Parking lamps, tail lamps and license (number) plate lighting C70

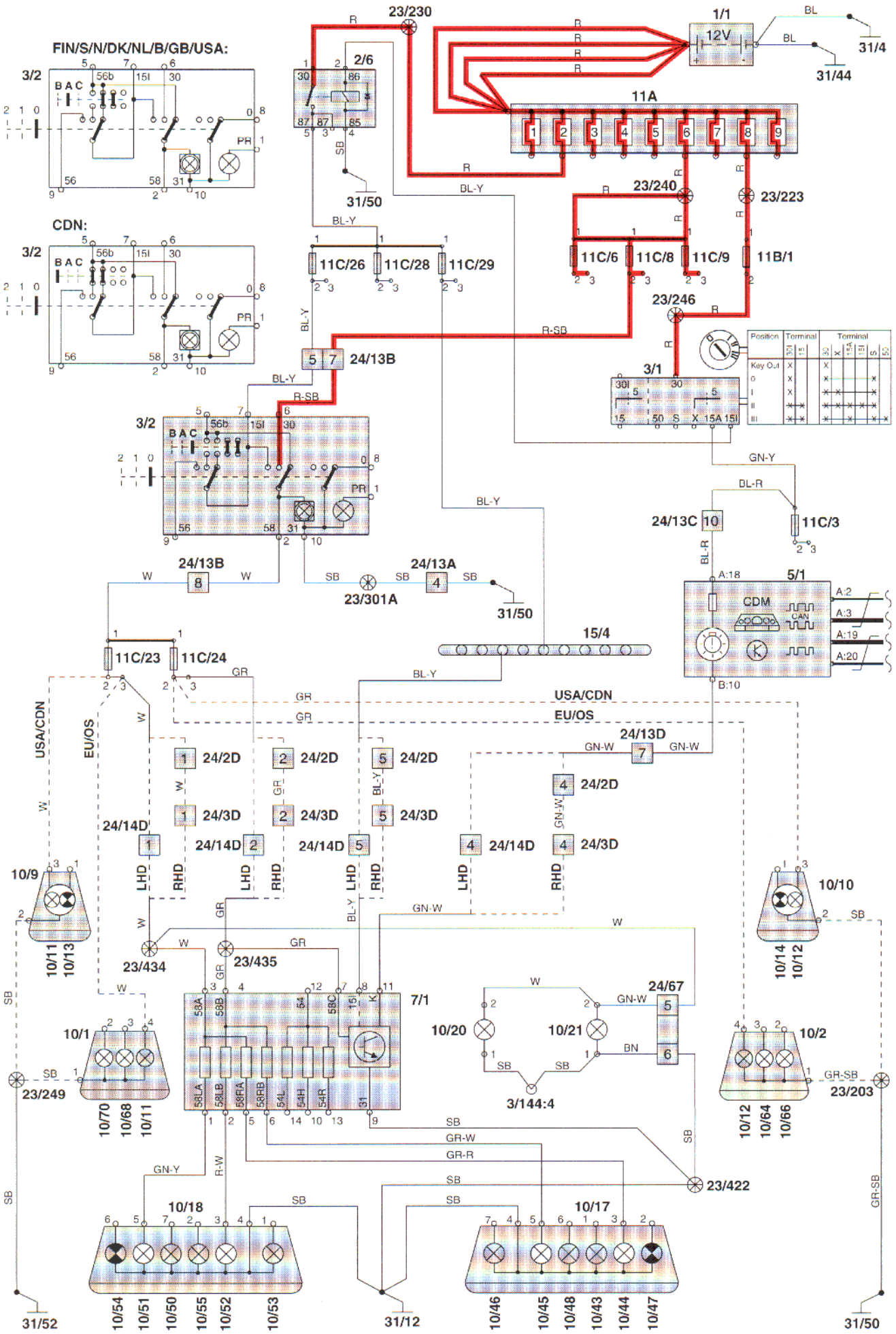

Parking lamps, tail lamps and license (number) plate lighting S70

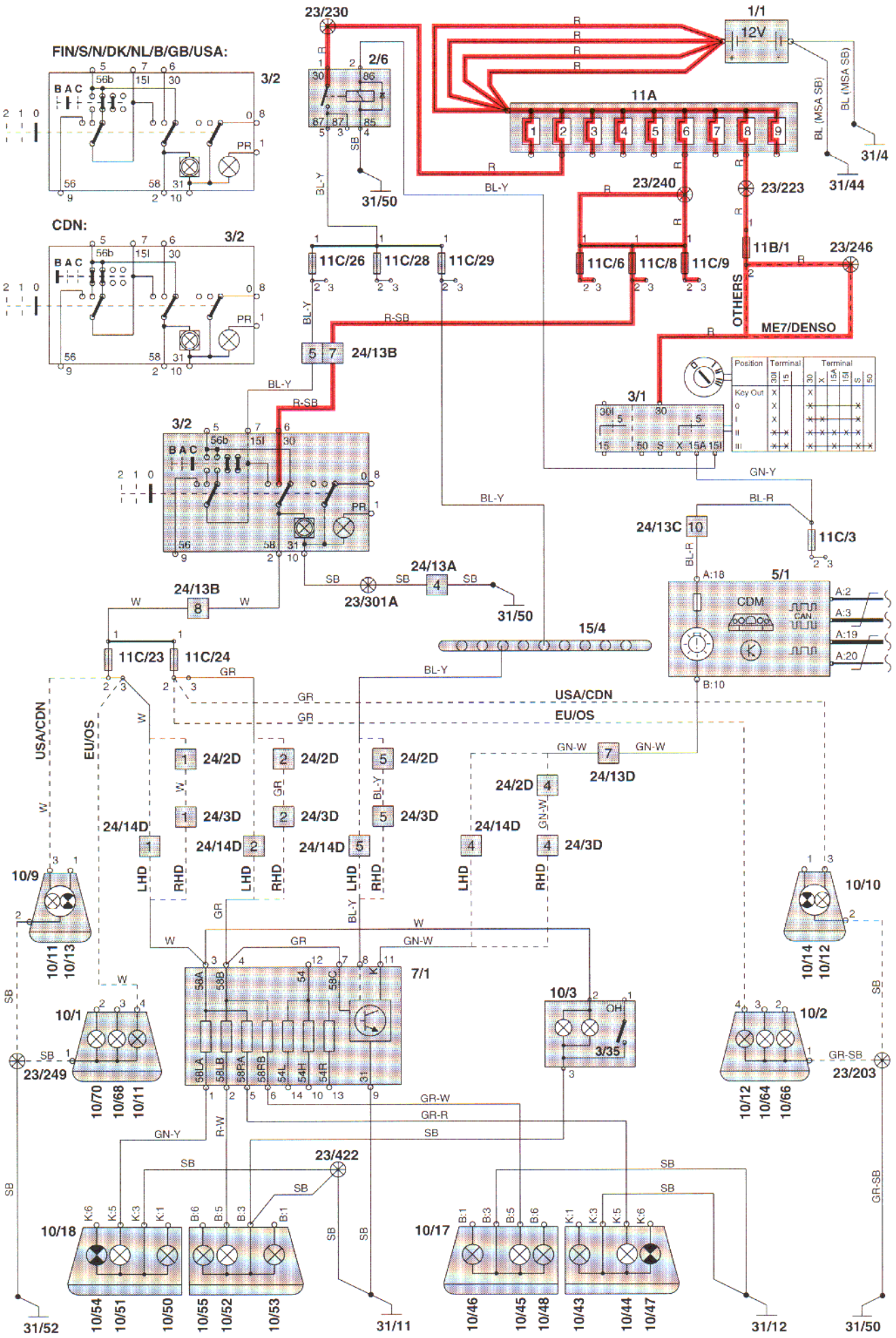

Parking lamps, tail lamps and license (number) plate lighting V70

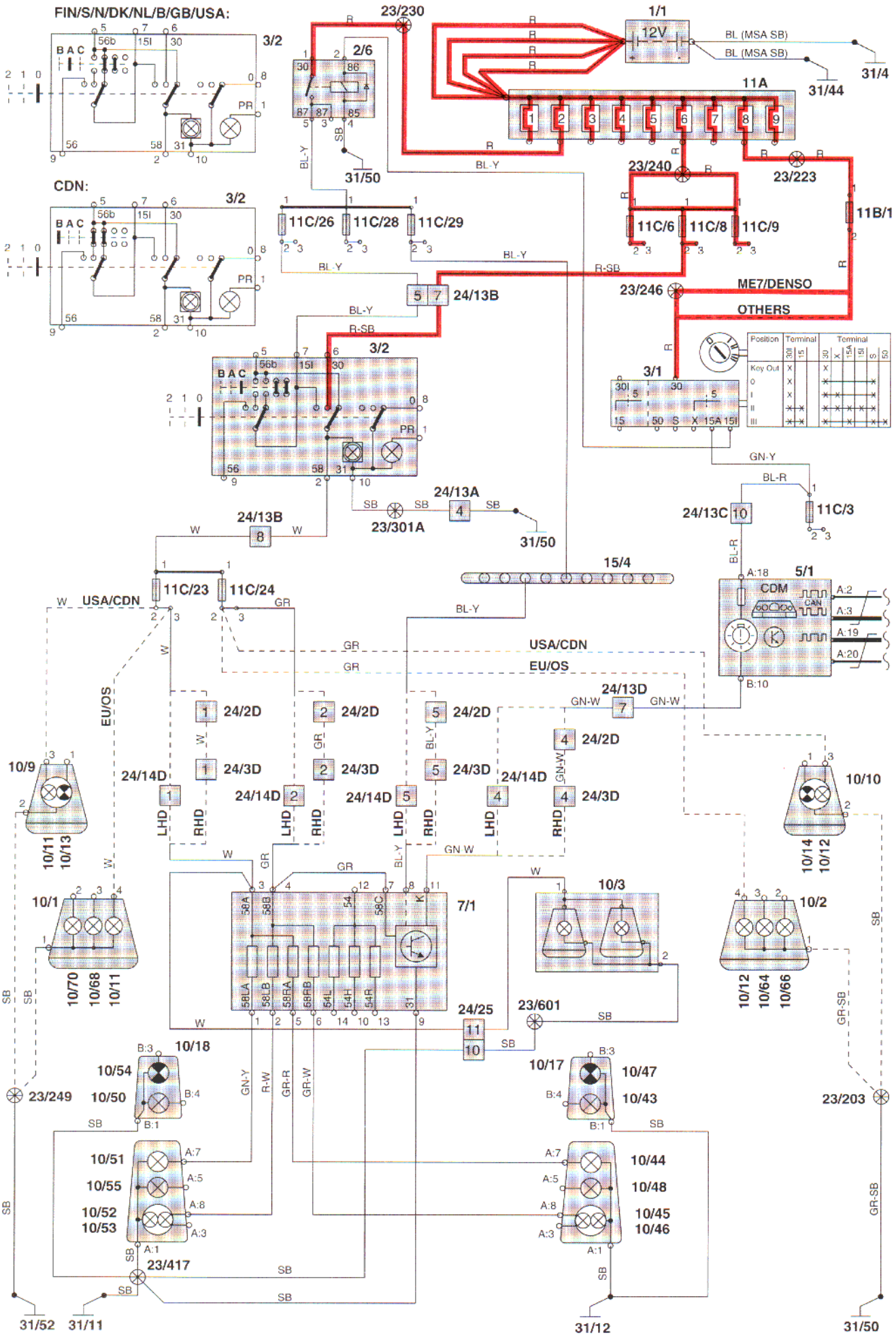

Brake (stop) lamps
C70

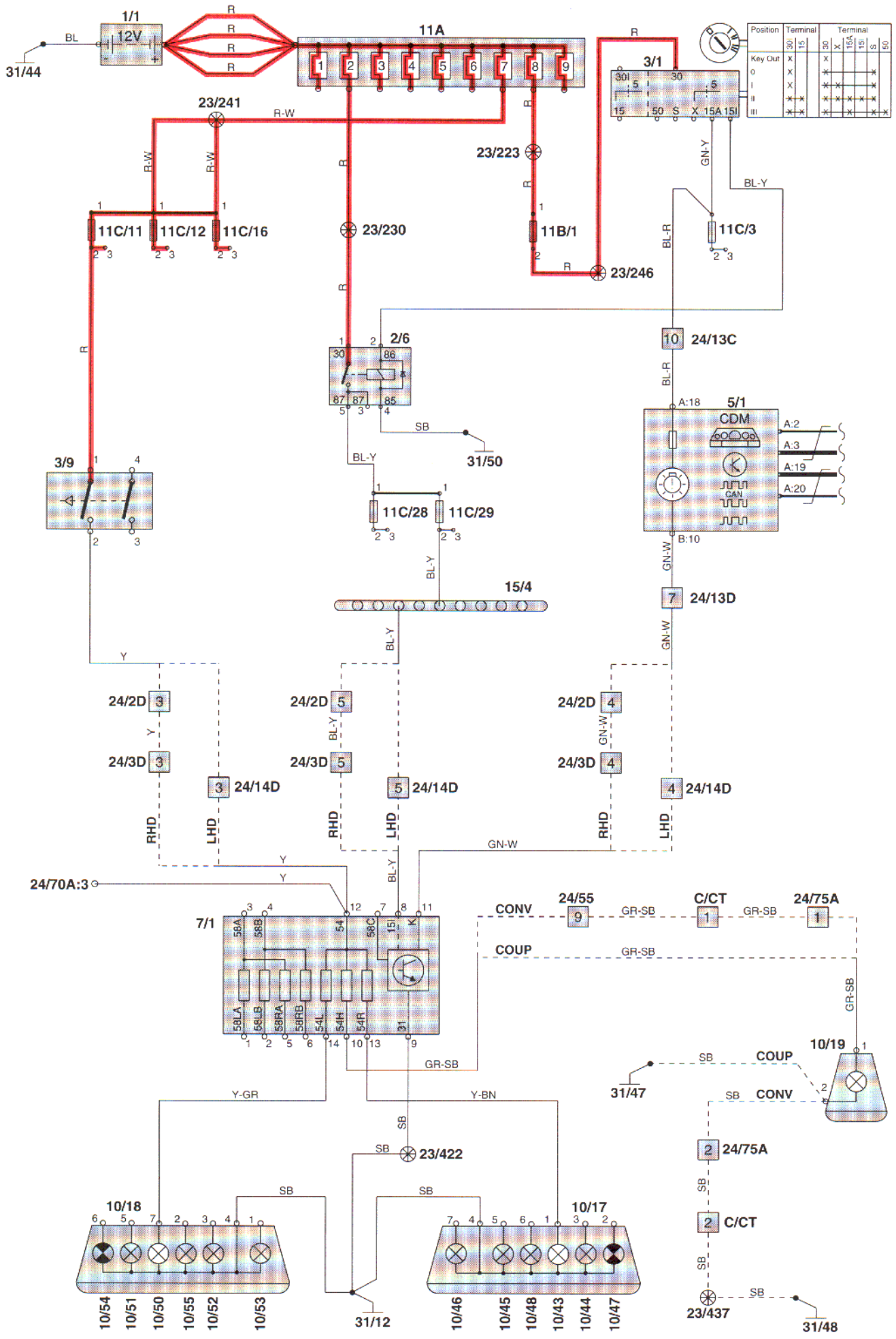

Brake (stop) lamps
S70

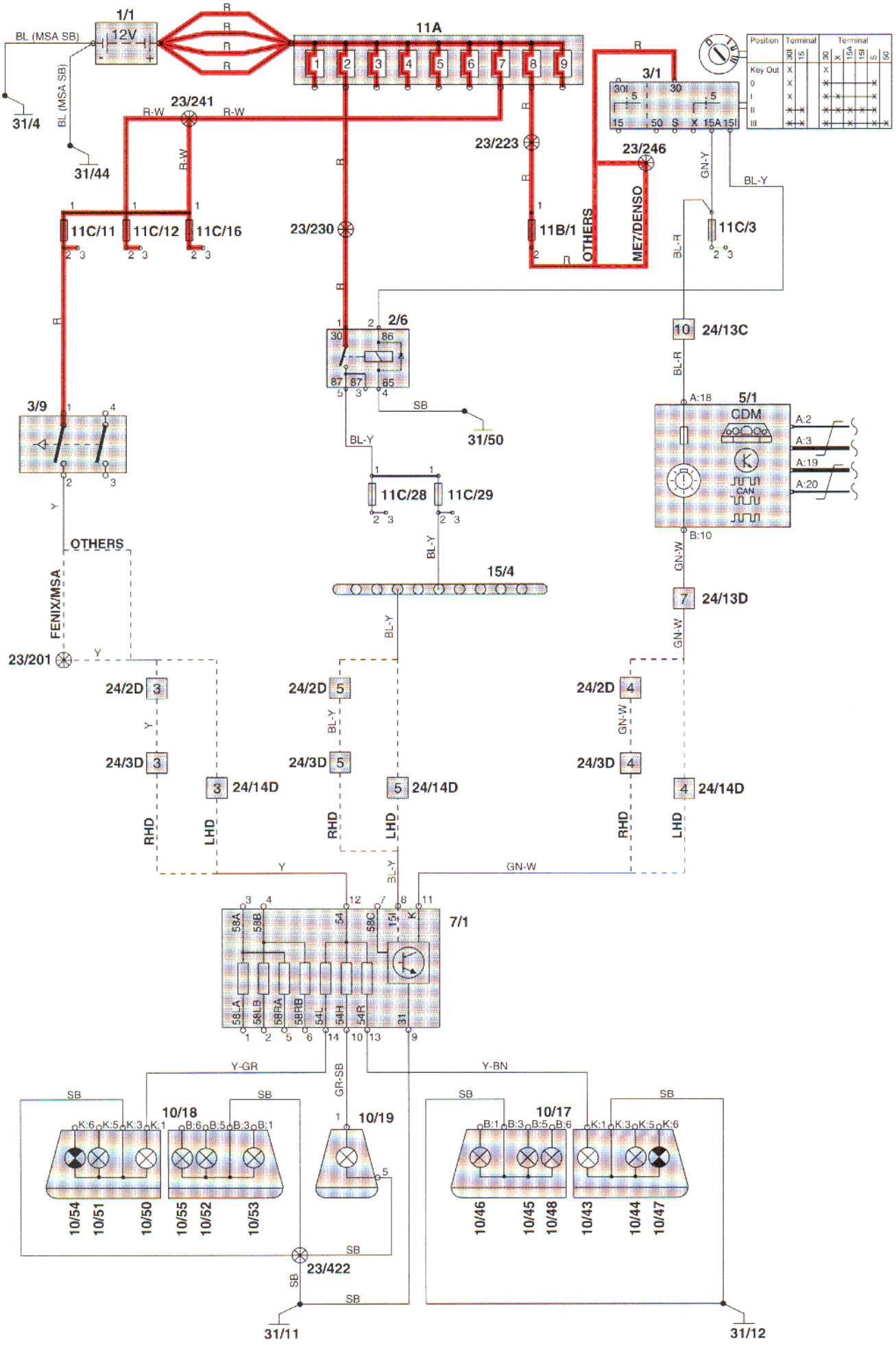

Brake (stop) lamps
V70

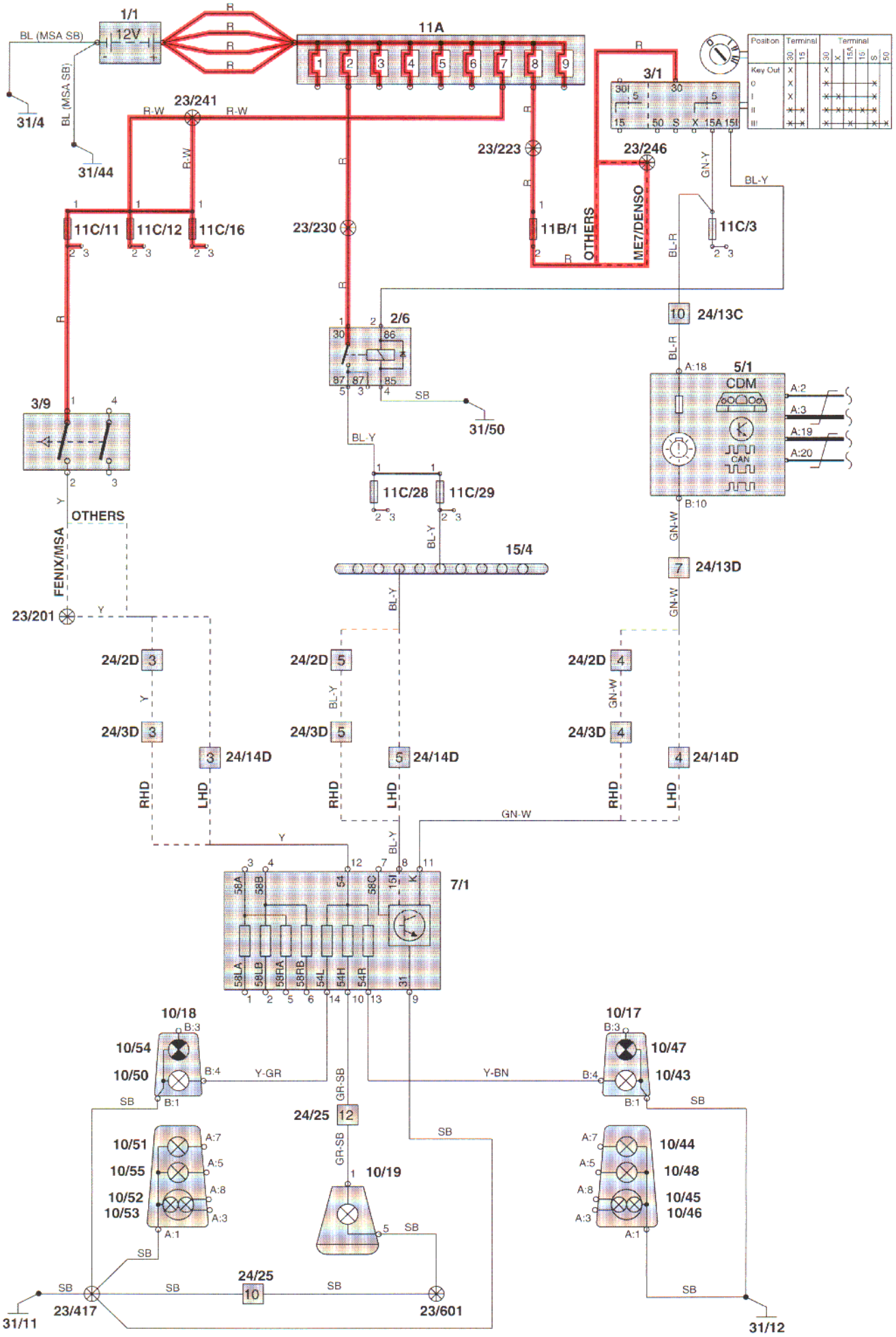

Reversing lamp

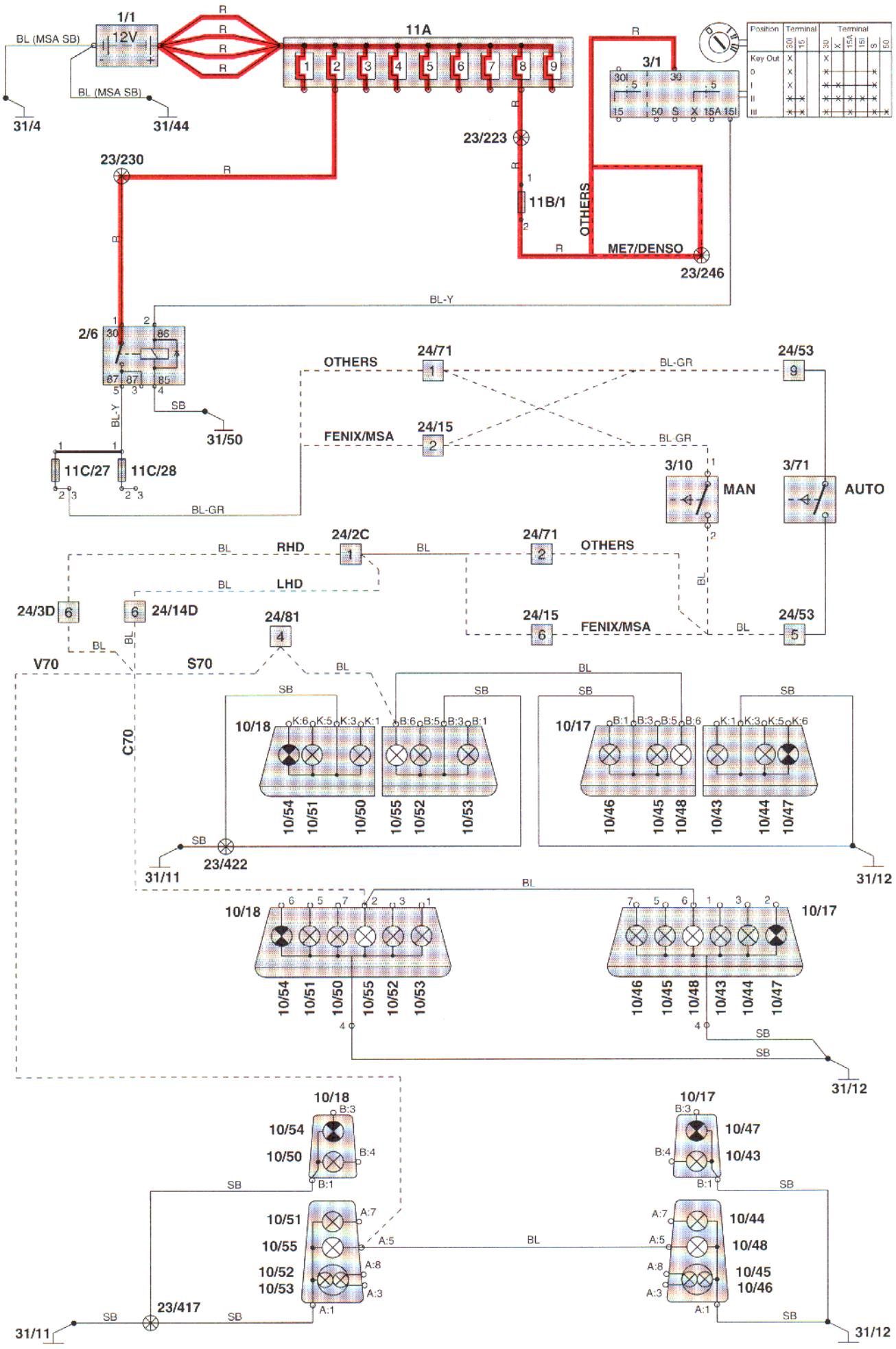

Interior lighting
C70 Convertible

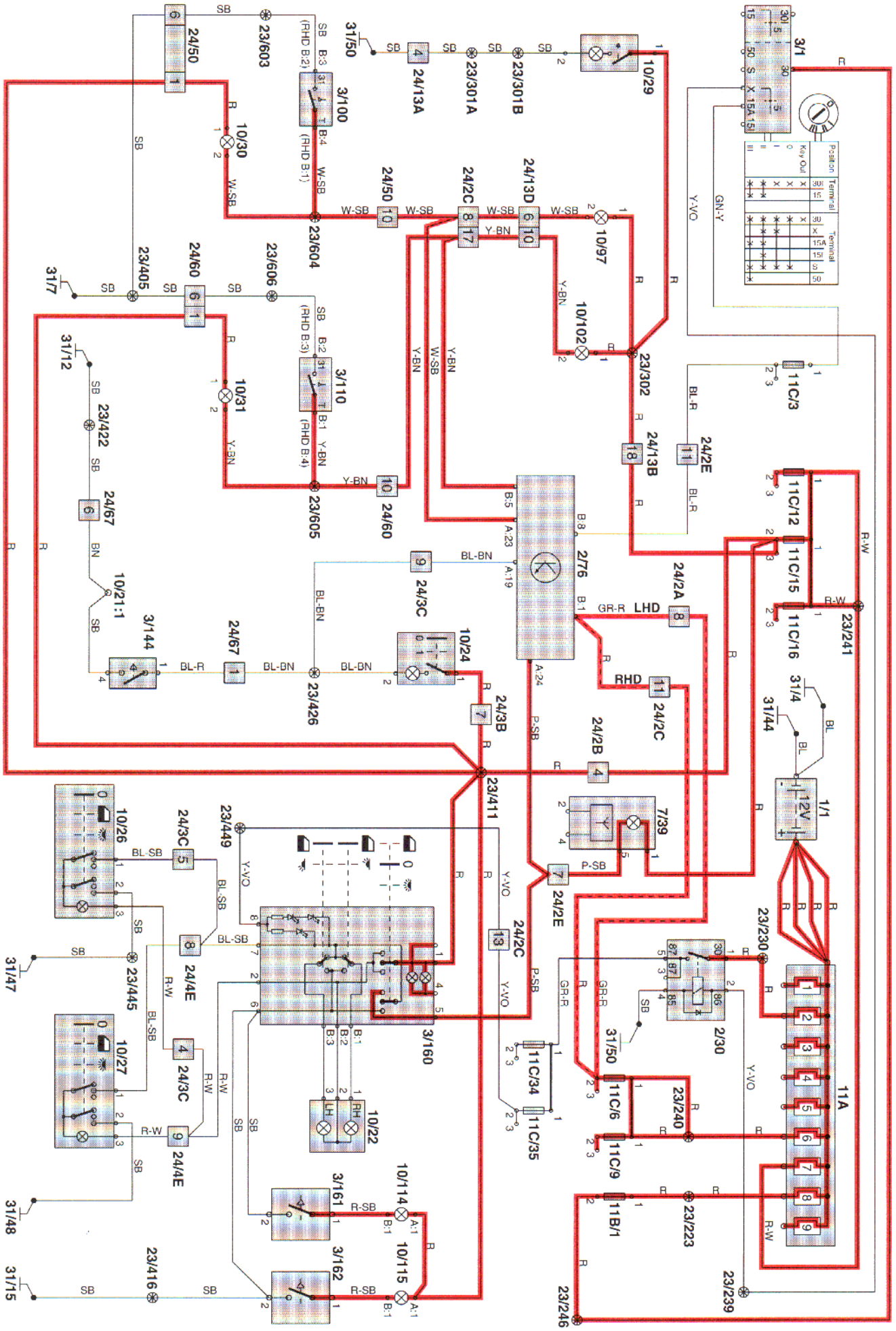

Interior lighting
C70 coupé

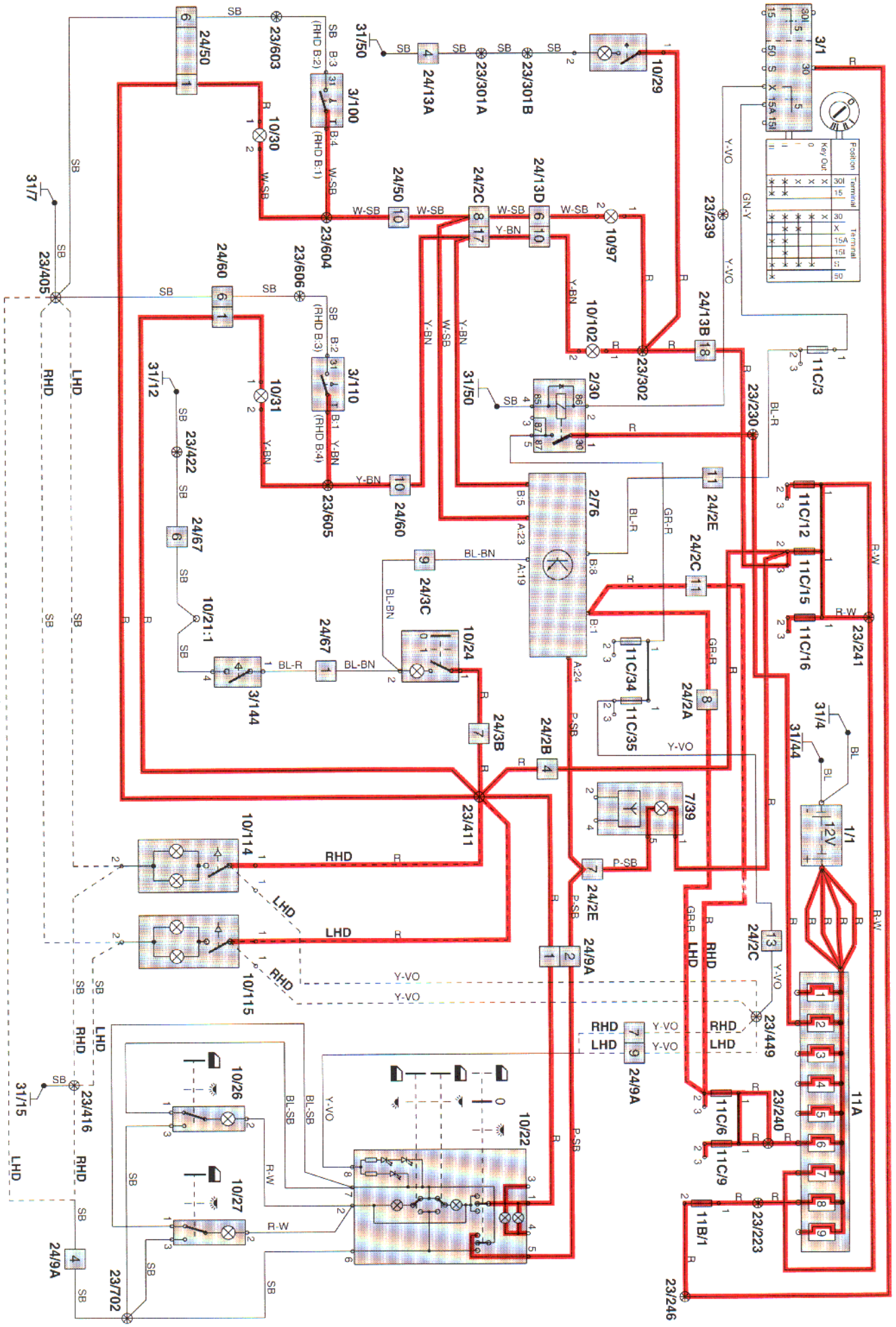

Interior lighting
S70, V70

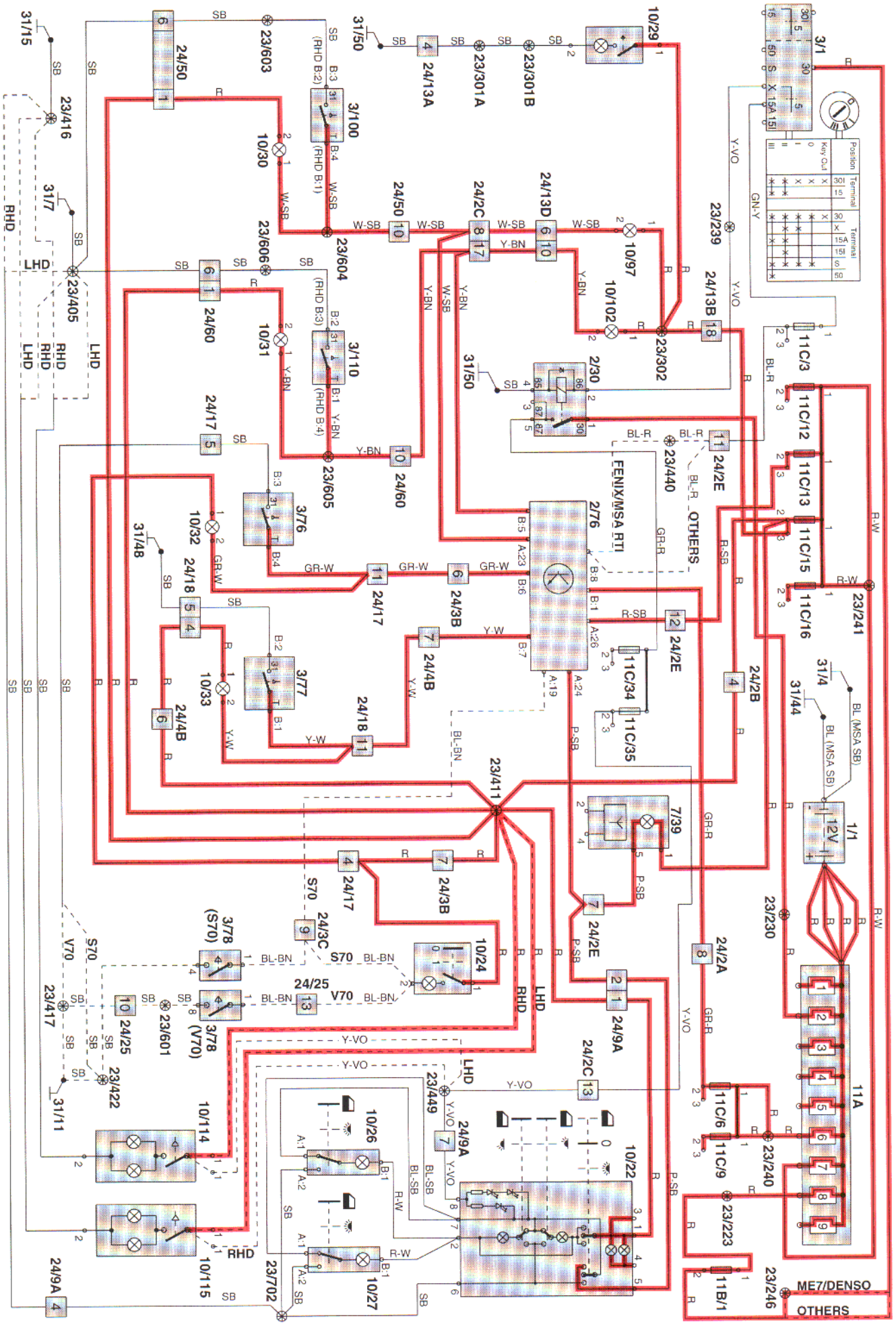

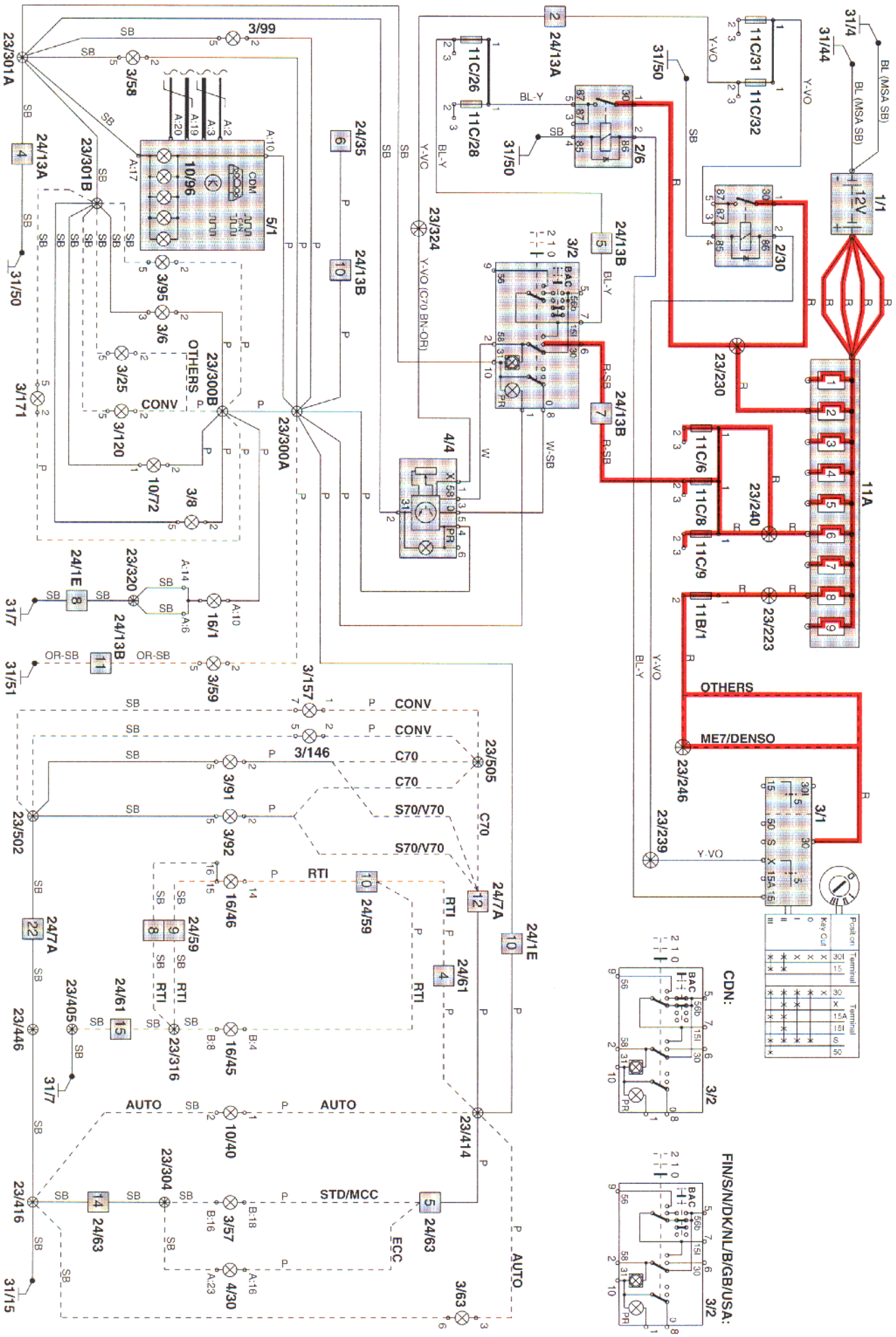
31/4
31/44
BL (MSA SB)
12V
1/1
11C/31
11C/32
Y-VO
31/50
2/30
23/230
11A
11C/6
11C/8
11C/9
11B/1
23/240
23/223
OTHERS
ME7/DENSO
23/246
23/239
3/1
Y-VO
BL-Y
24/13A
2/6
11C/26
11C/28
24/13B
3/2
23/324
Y-VO (C70 BN-OR)
R-SB
W-SB
4/4
23/301A
3/99
3/58
24/35
10/96
5/1
23/301B
3/95
3/6
3/25
3/120
10/72
3/8
OTHERS
CONV
23/300B
23/300A
3/171
24/1E
23/320
16/1
3/59
3/157
3/146
3/91
3/92
23/502
23/505
C70
S70/V70
RTI
16/46
24/59
24/7A
24/61
23/405
23/316
16/45
23/446
AUTO
10/40
23/414
23/304
STD/MCC
3/57
24/63
ECC
4/30
3/63
23/416
31/7
31/51
31/15
CDN:
FIN/S/N/DK/NL/B/GB/USA:

Turn signal lamps and hazard warning signal flashers C70

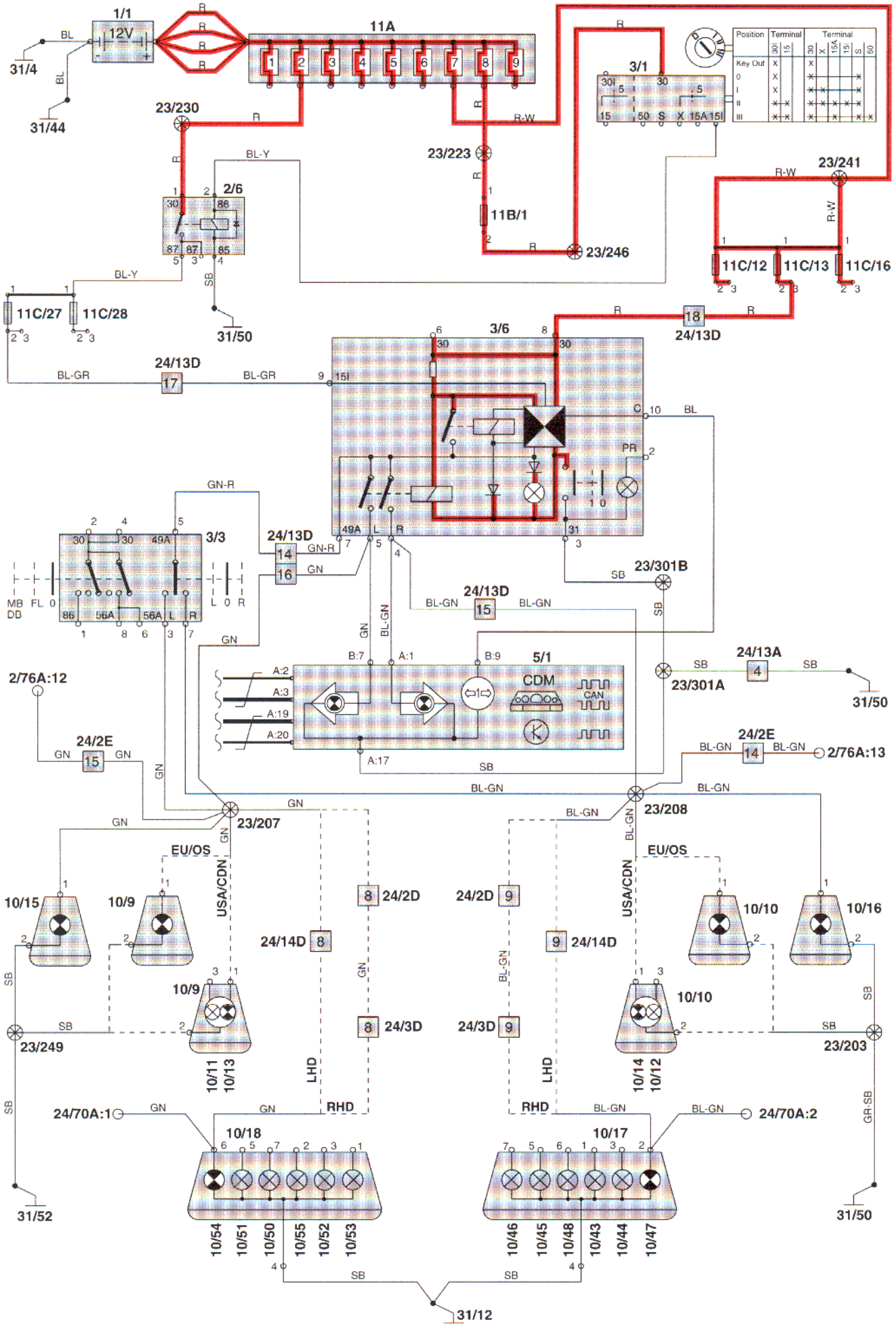

Turn signal lamps and hazard warning signal flashers S70

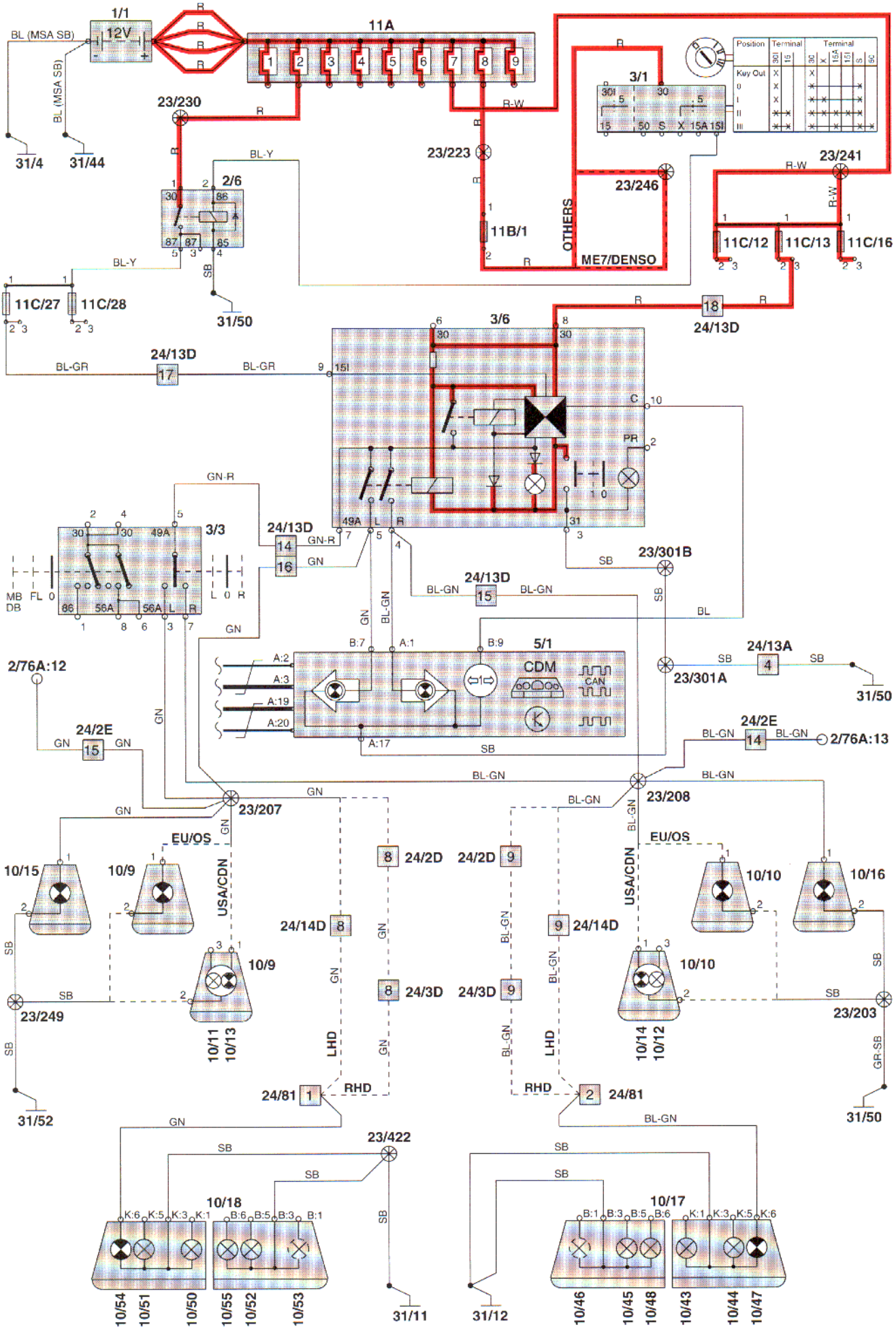

Turn signal lamps and hazard warning signal flashers
V70

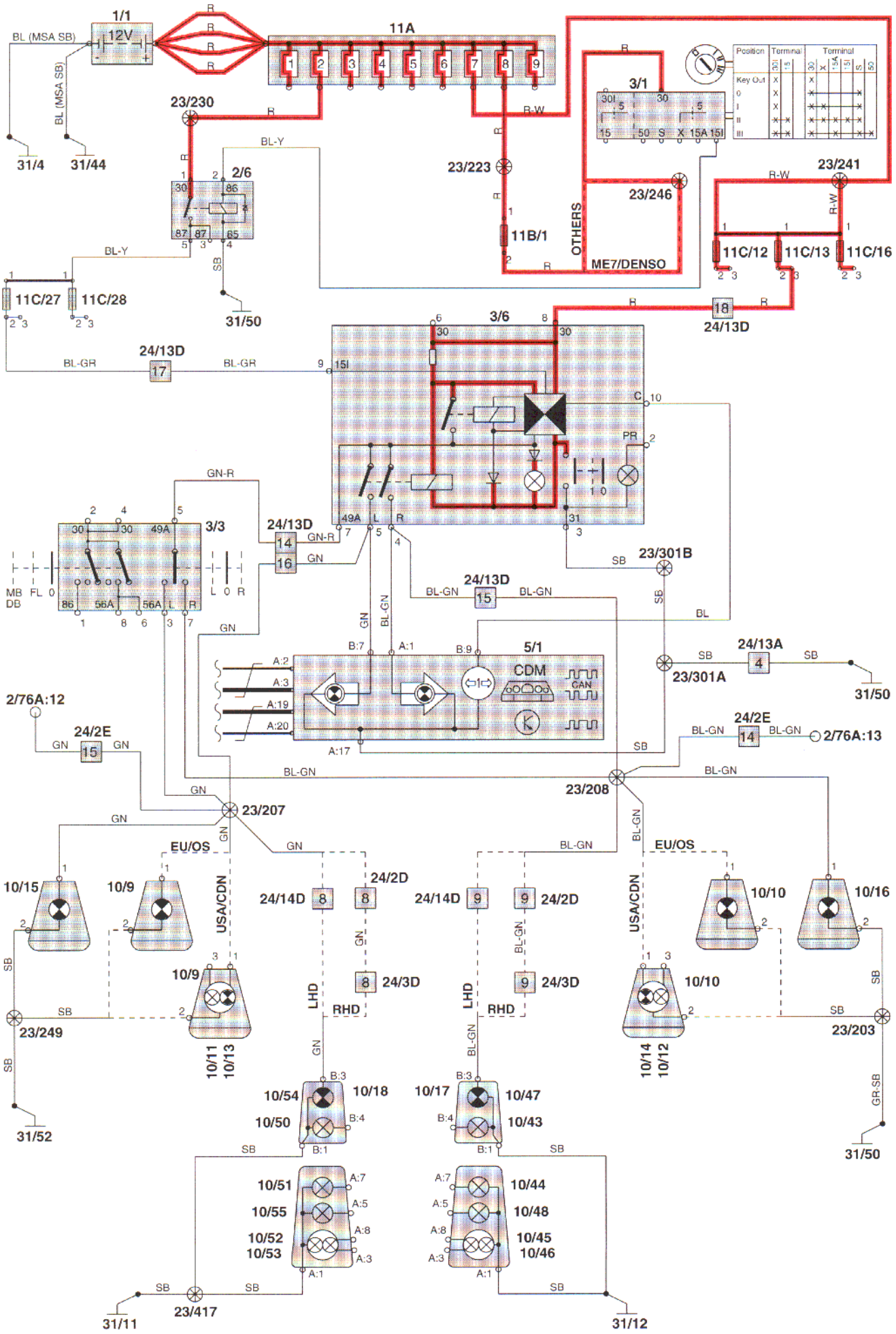

Signal horn

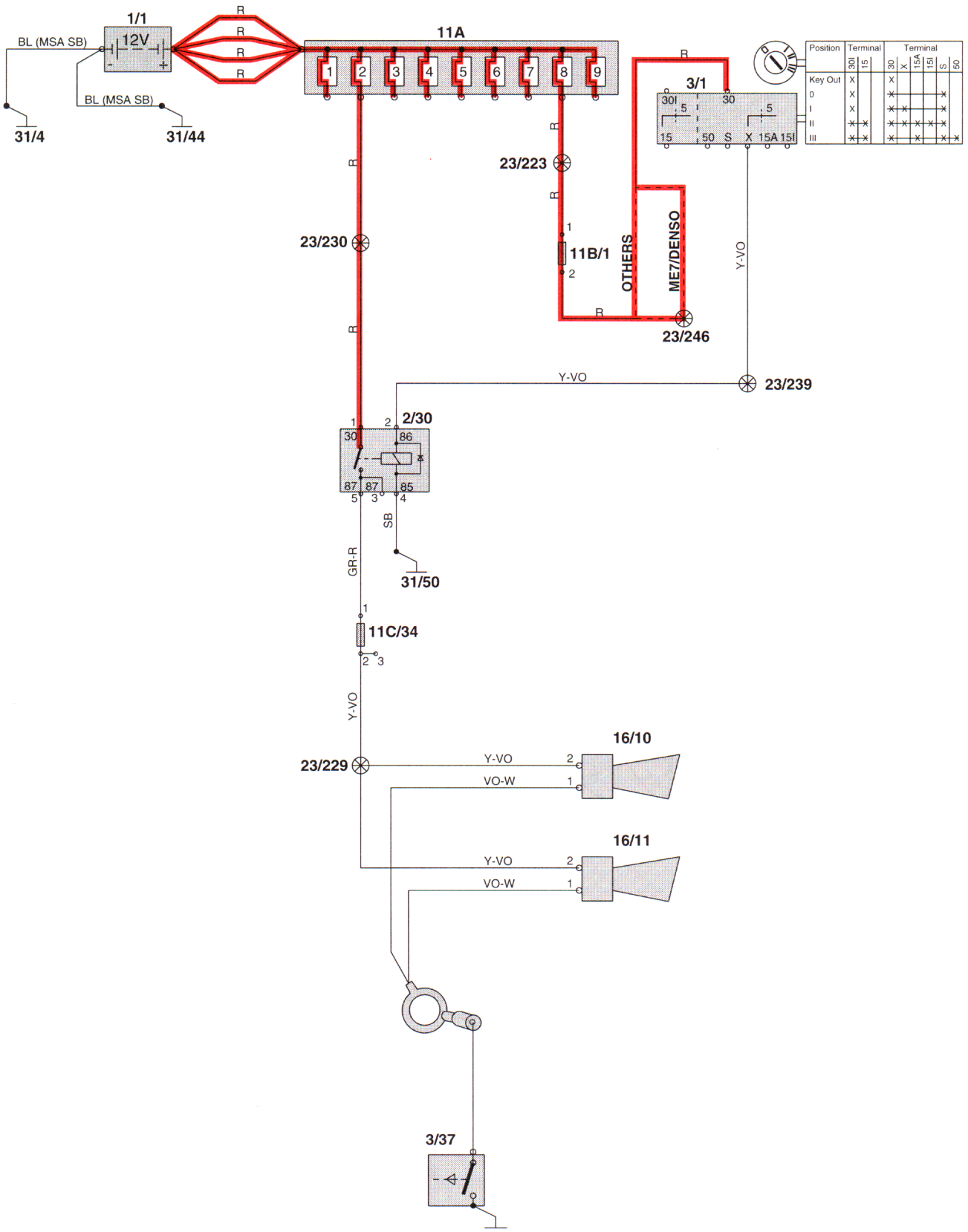
1/1
12V
BL (MSA SB)
BL (MSA SB)
31/4
31/44
R
R
R
R
11A
1
2
3
4
5
6
7
8
9
3/1
30I
30
5
5
15
50
S
X
15A
15I
Position
Terminal
Terminal
30I
15
30
X
15A
15I
S
50
Key Out
0
I
II
III
23/223
23/230
11B/1
OTHERS
ME7/DENSO
Y-VO
23/246
Y-VO
23/239
2/30
30
86
87
87
85
SB
31/50
GR-R
11C/34
Y-VO
23/229
Y-VO
VO-W
16/10
Y-VO
VO-W
16/11
3/37

Washers
windshield and headlamp

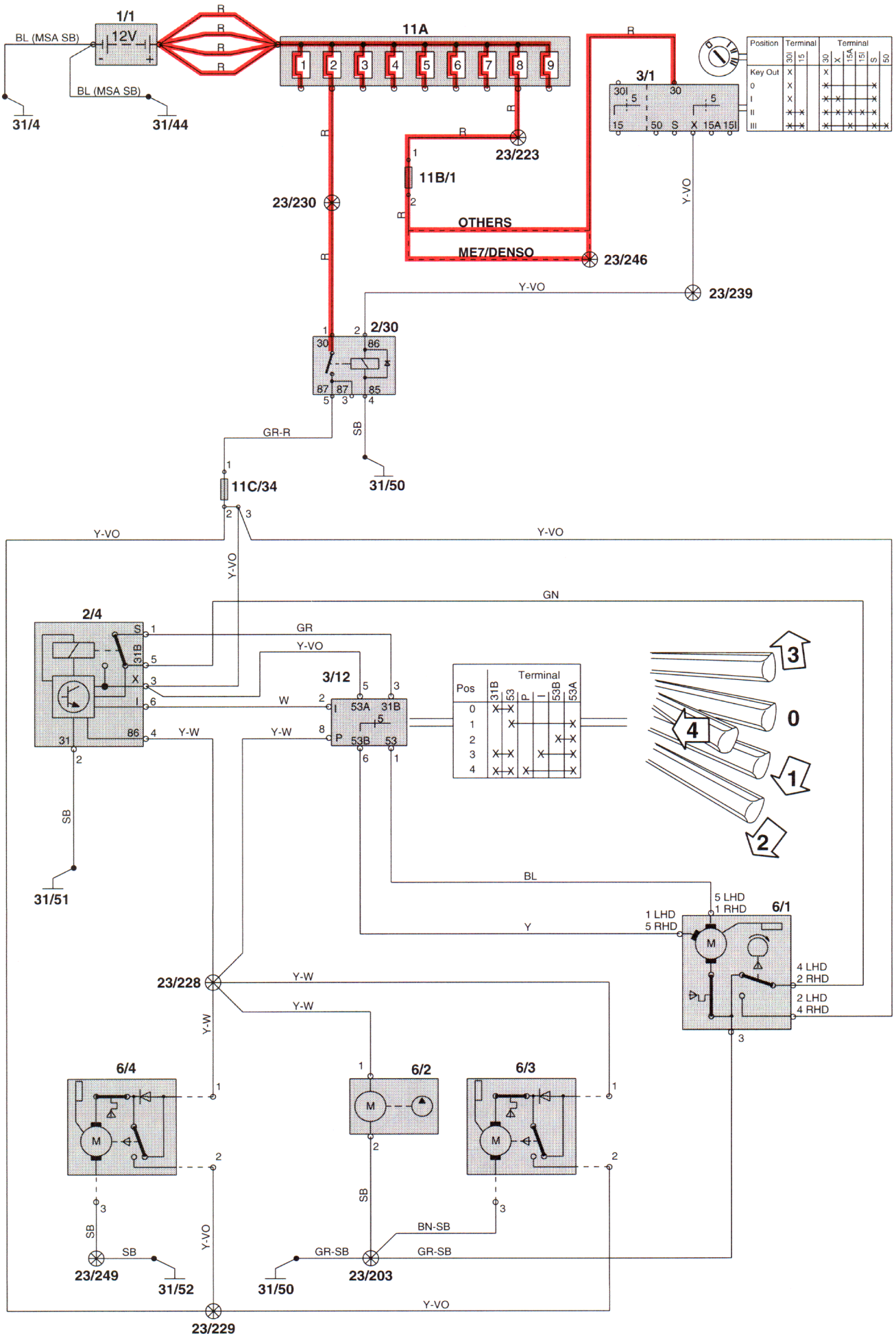

Washers
rear windshield

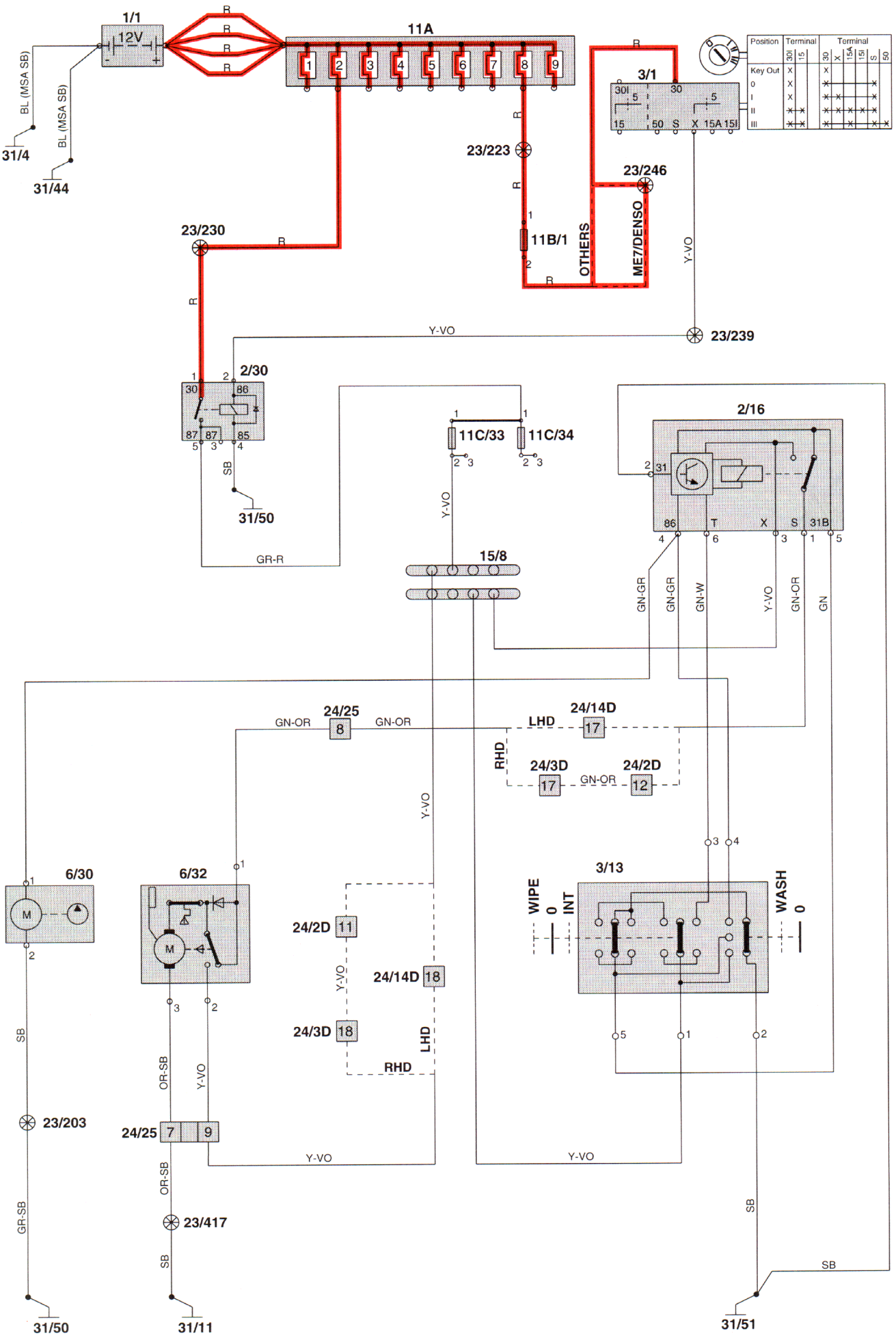

Cigarette lighter/12V outlet

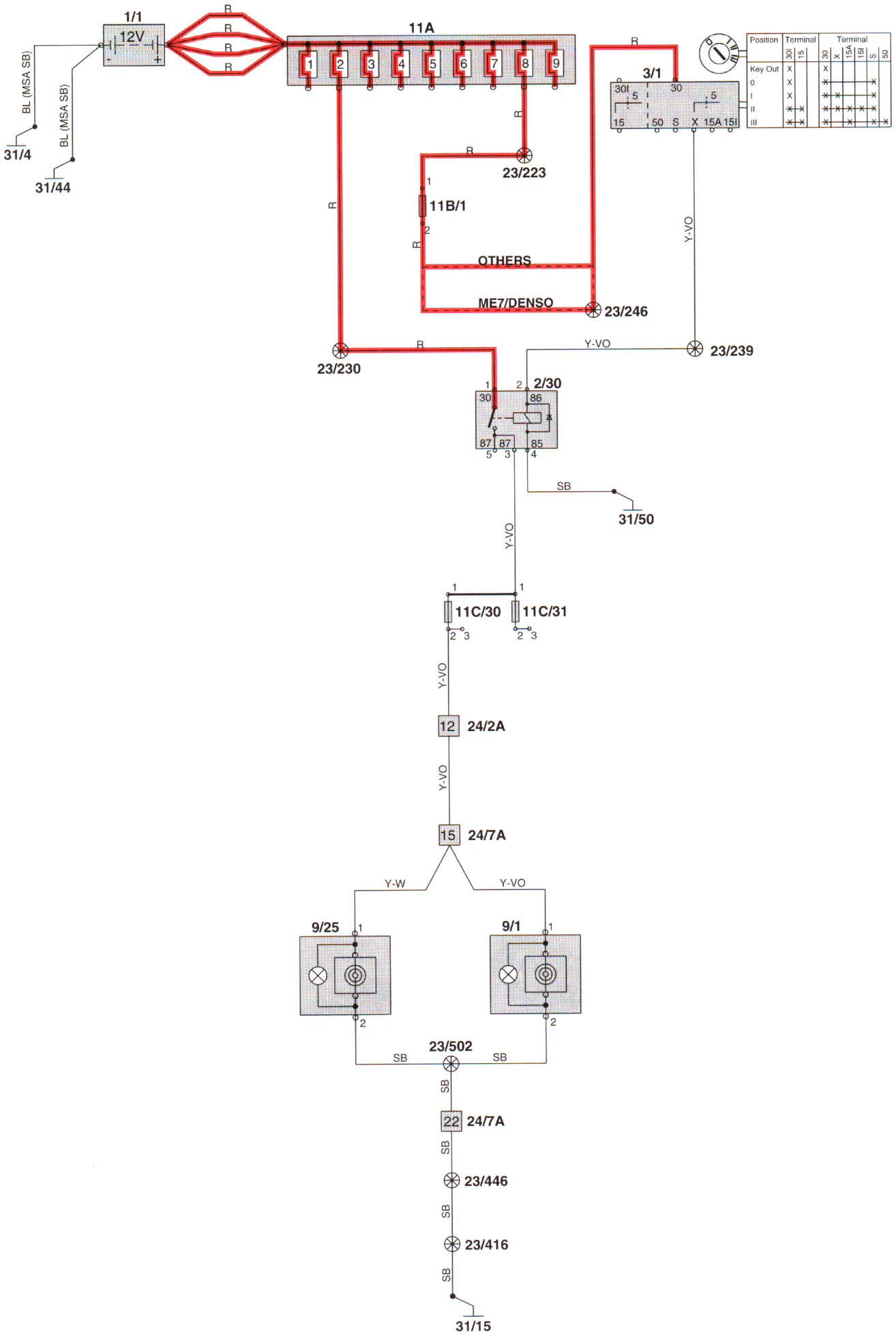

Anti-theft alarm
C70 Convertible

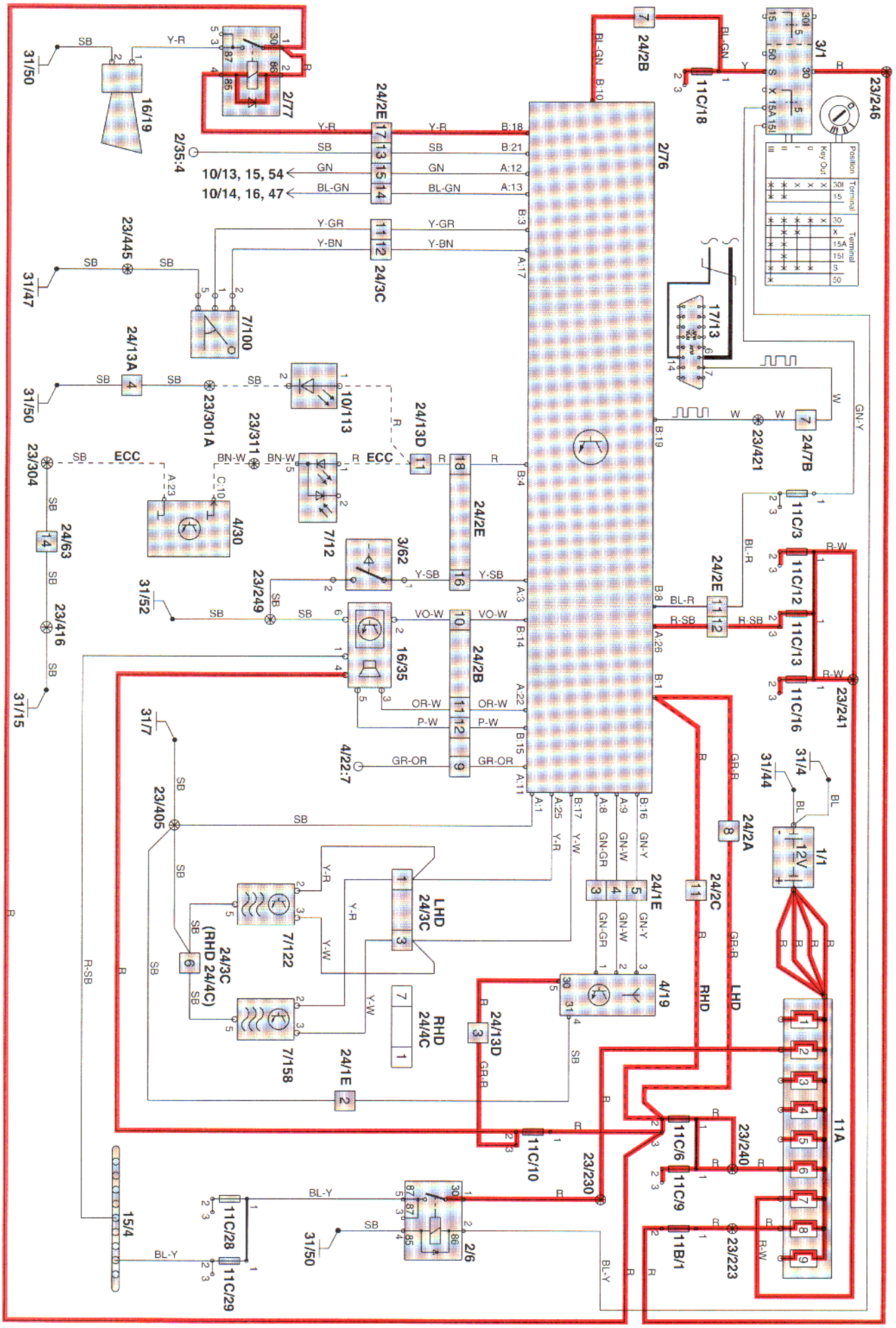

Anti-theft alarm
C70 coupé

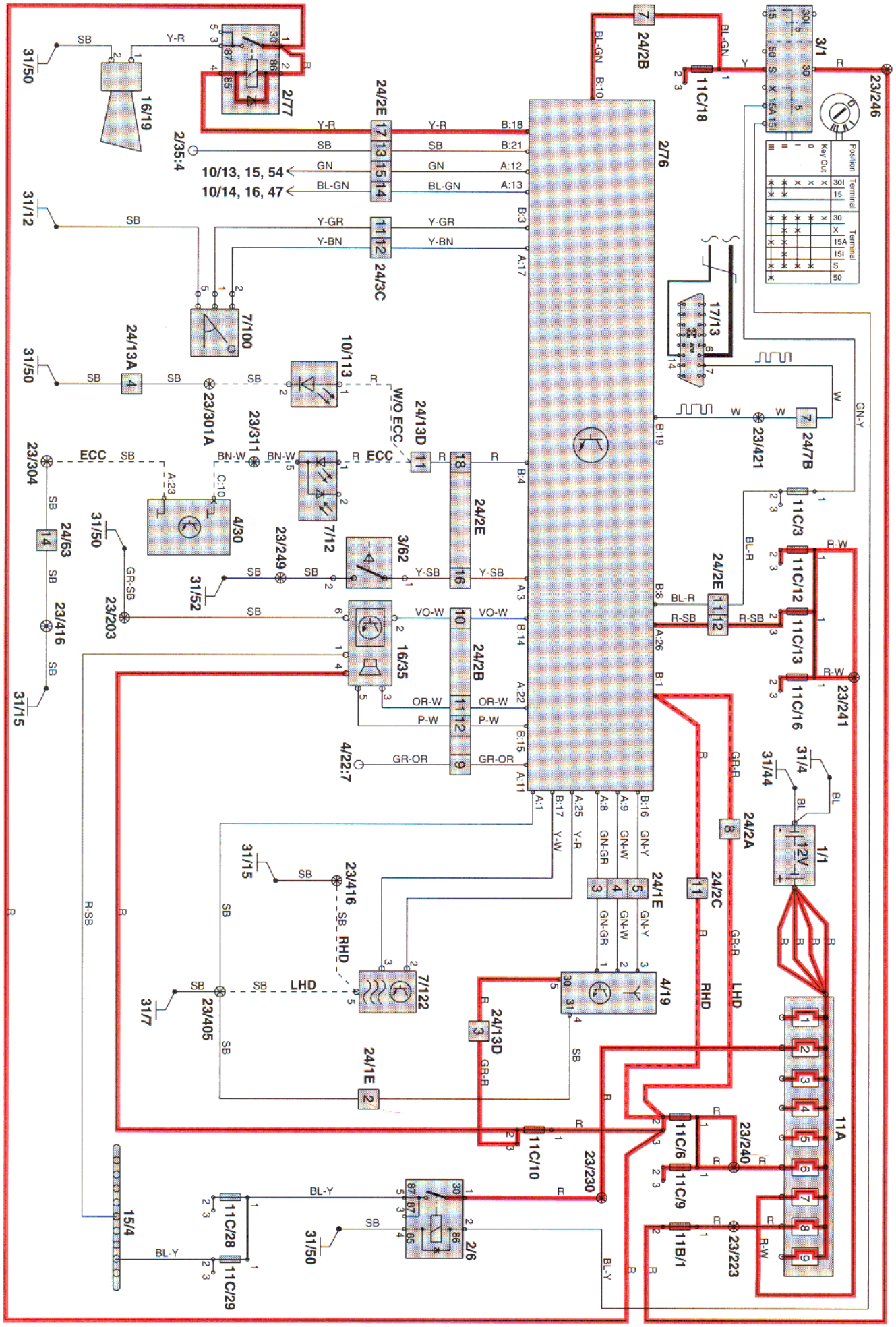

Anti-theft alarm
S70, V70

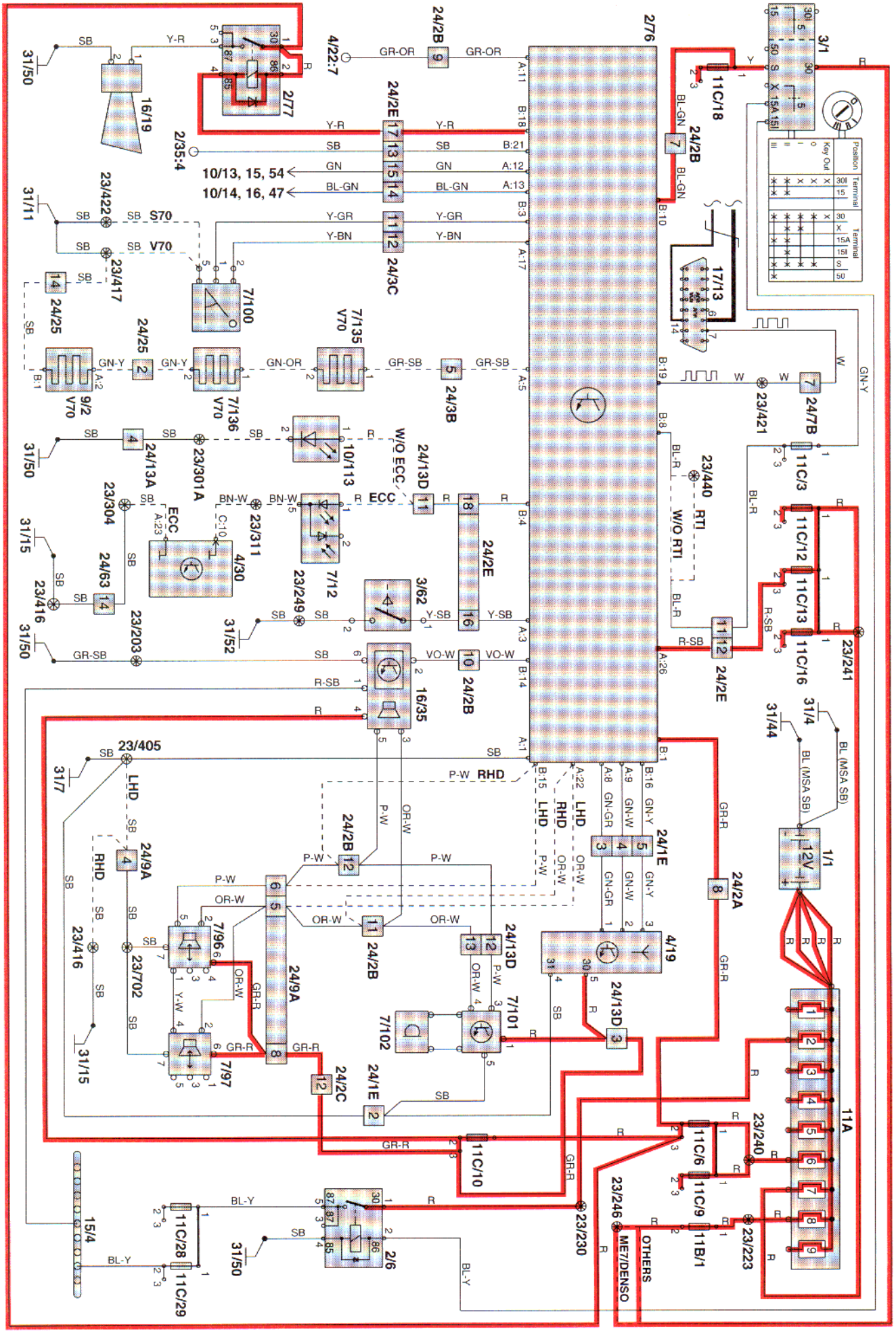

Immobilizer
Fenix 5.2, Denso, ME7

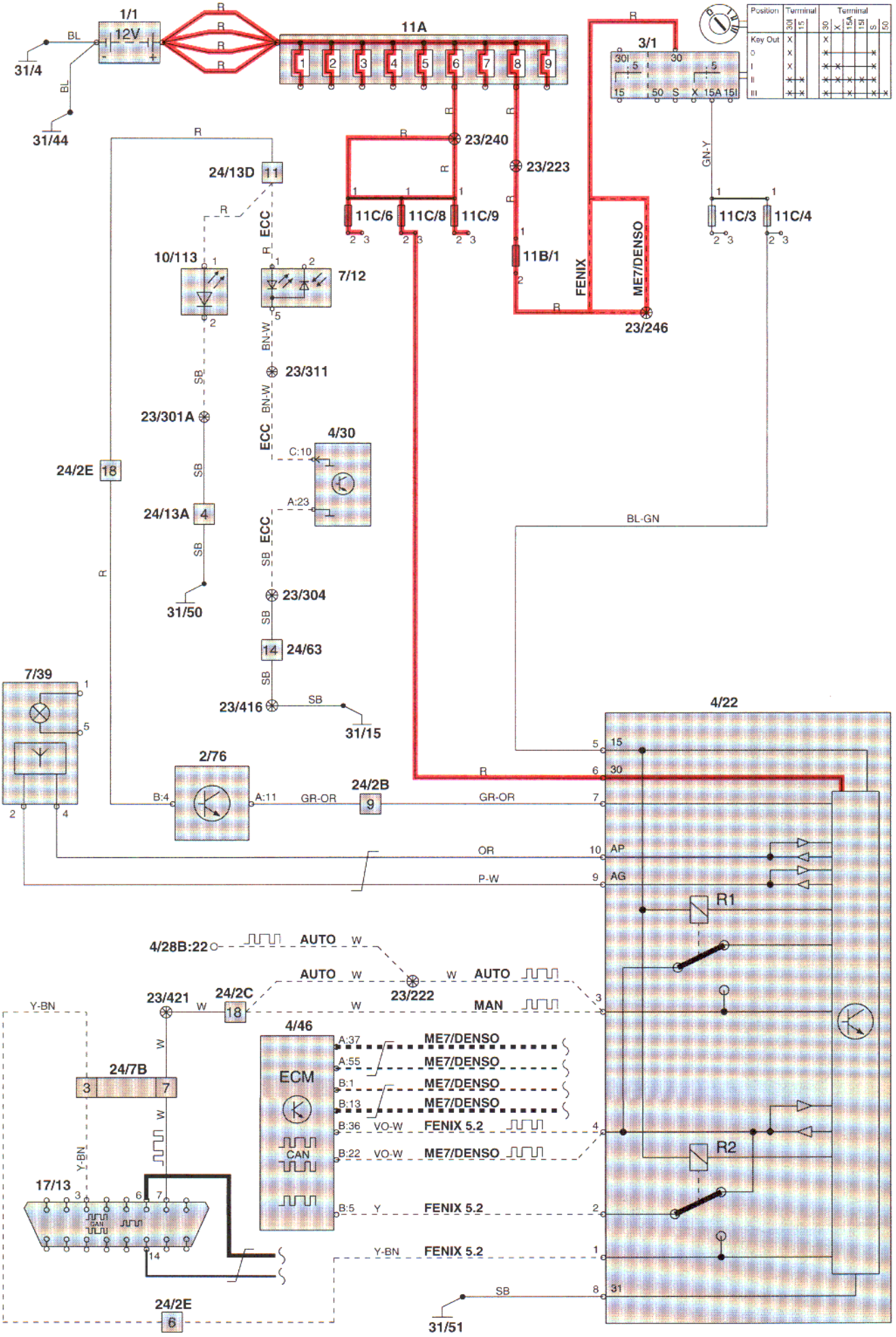

Immobilizer
MSA 15.7

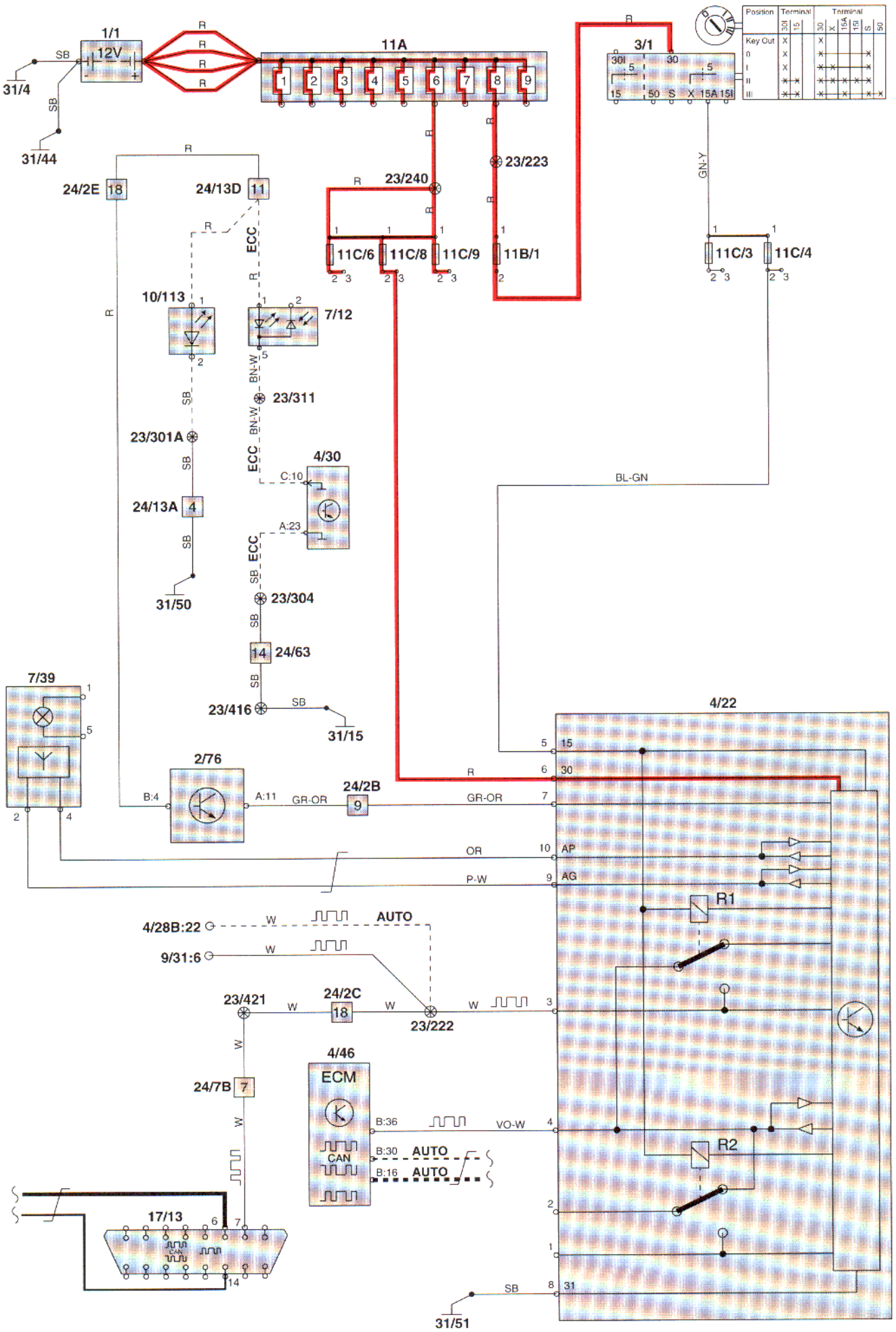

Diagnostics
Fenix 5.2, Denso, ME7

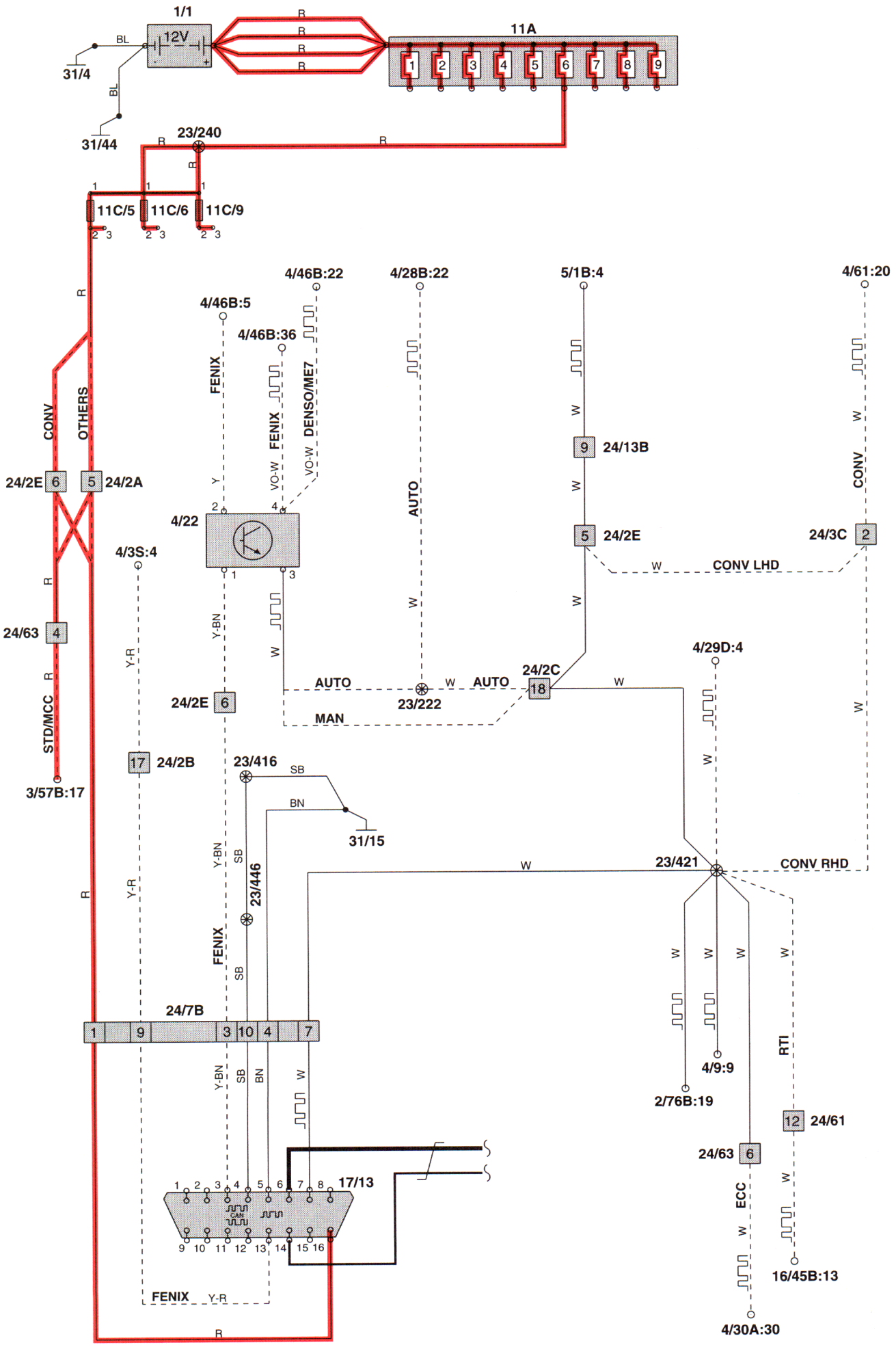

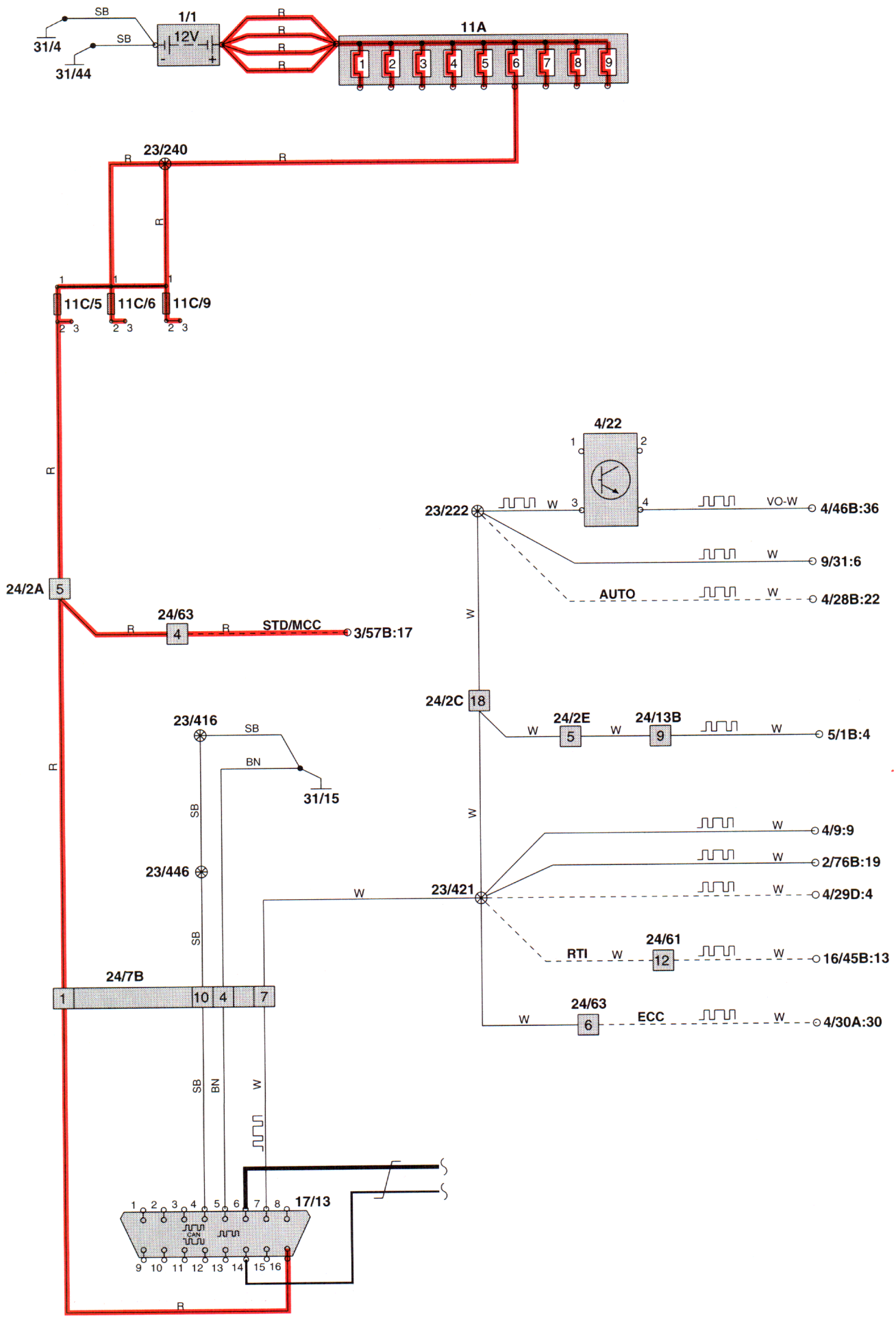
SB
31/4
SB
31/44
1/1
12V
R
R
R
R
11A
1
2
3
4
5
6
7
8
9
23/240
R
R
R
11C/5
11C/6
11C/9
R
24/2A
5
24/63
4
R
R
STD/MCC
3/57B:17
4/22
23/222
W
VO-W
4/46B:36
W
9/31:6
AUTO
W
4/28B:22
W
24/2C
18
24/2E
5
24/13B
9
W
W
W
5/1B:4
23/416
SB
BN
31/15
SB
23/446
SB
W
23/421
W
4/9:9
W
2/76B:19
W
4/29D:4
RTI
W
24/61
12
W
16/45B:13
24/7B
1
10
4
7
W
24/63
6
ECC
W
4/30A:30
SB
BN
W
17/13
CAN
R

Tow hitch wiring
COUP

24/70A

1 Left turn signal lamp
2 Right turn signal lamp
3 Brake (stop) lamps
4 Parking lights
5 Parking lights
6 Ground terminal

24/70B

1 30-supply
2 15I-supply
3 Reversing lamp
4 Fog tail lamp
5 Fog tail lamp, bridging
6 Ground terminal

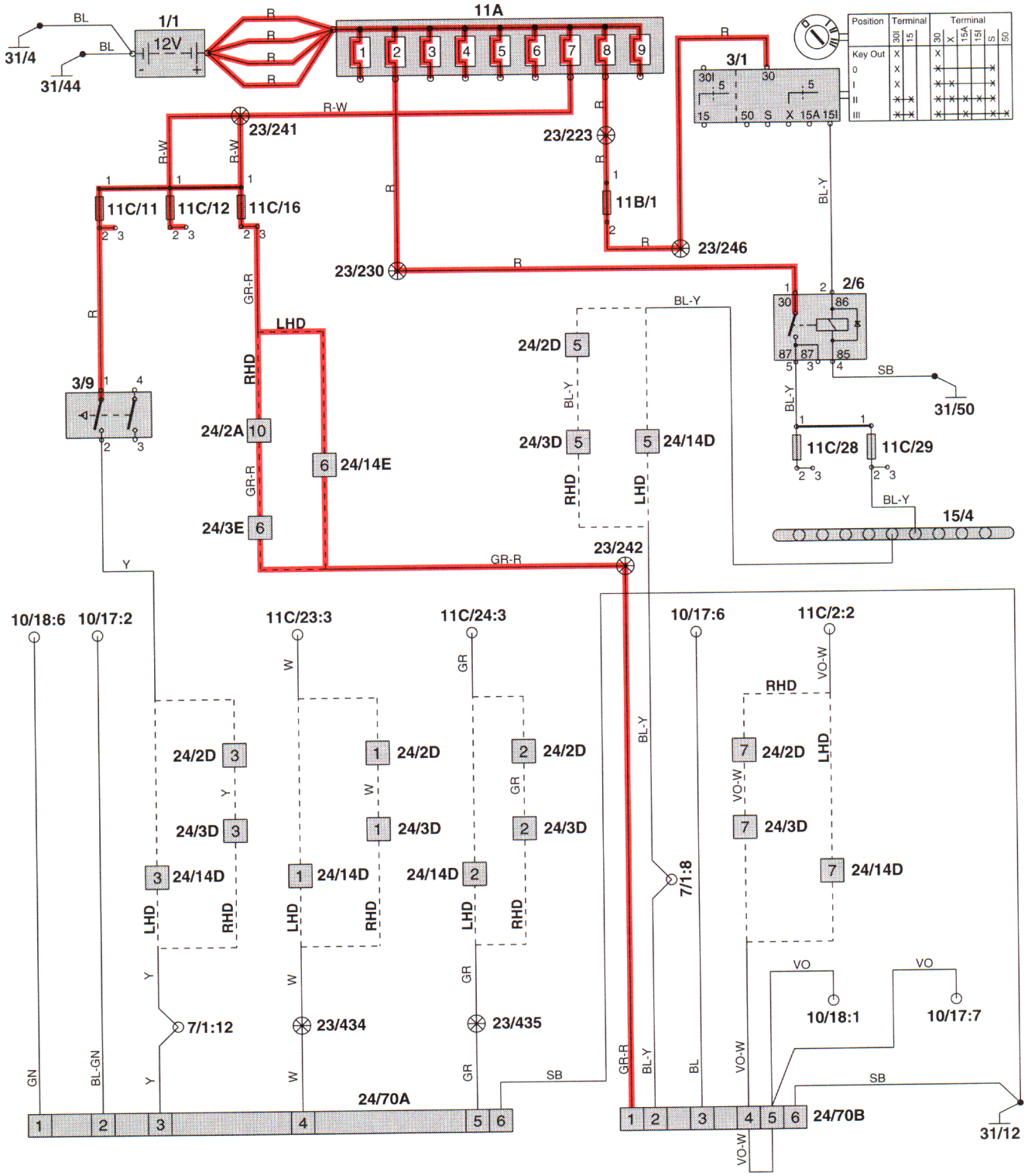

Accessories wiring

24/35

1 30-supply
2 X Supply
3 High beam
6 Rheostat, variable supply
8 Ground terminal

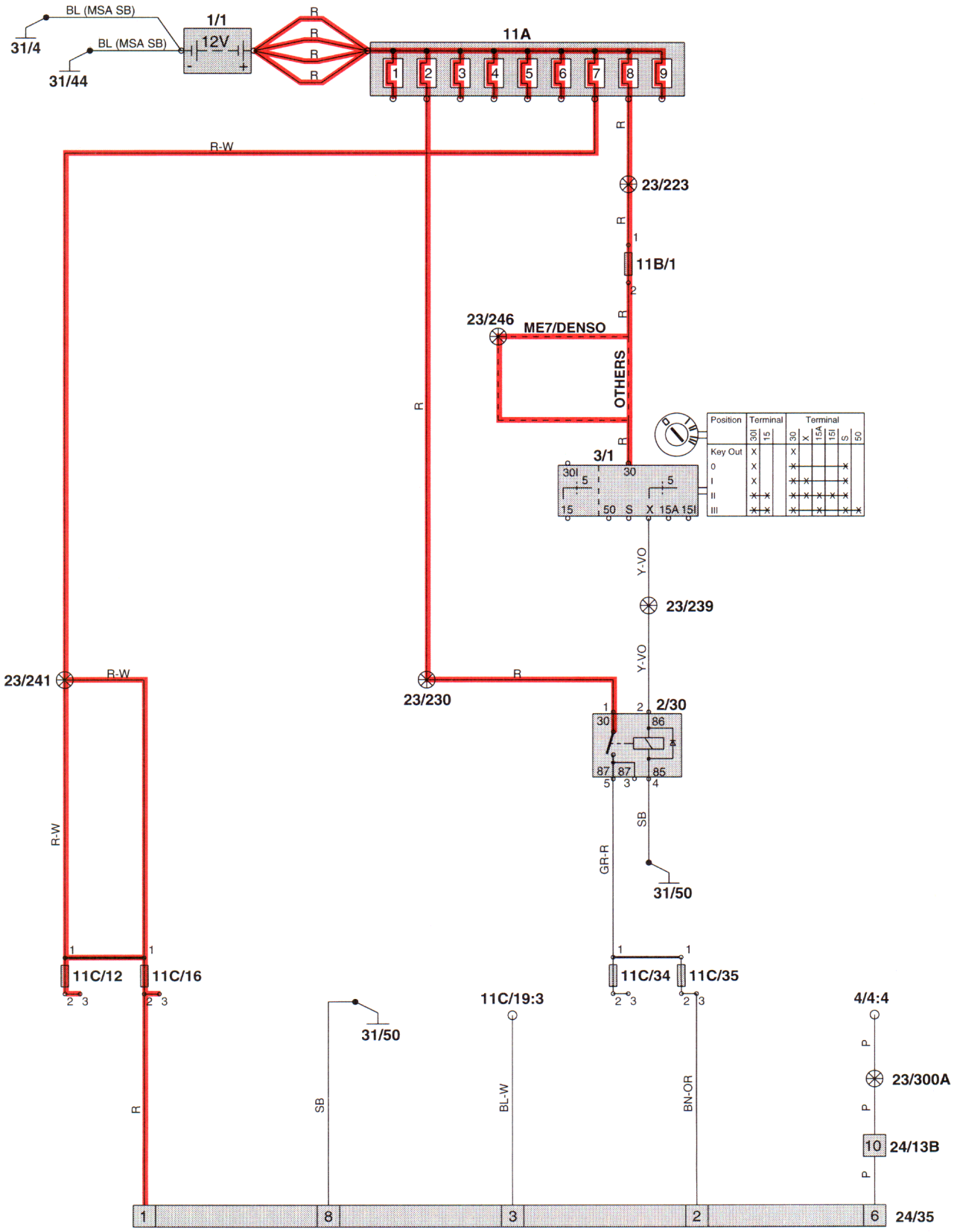

Coolbox wiring

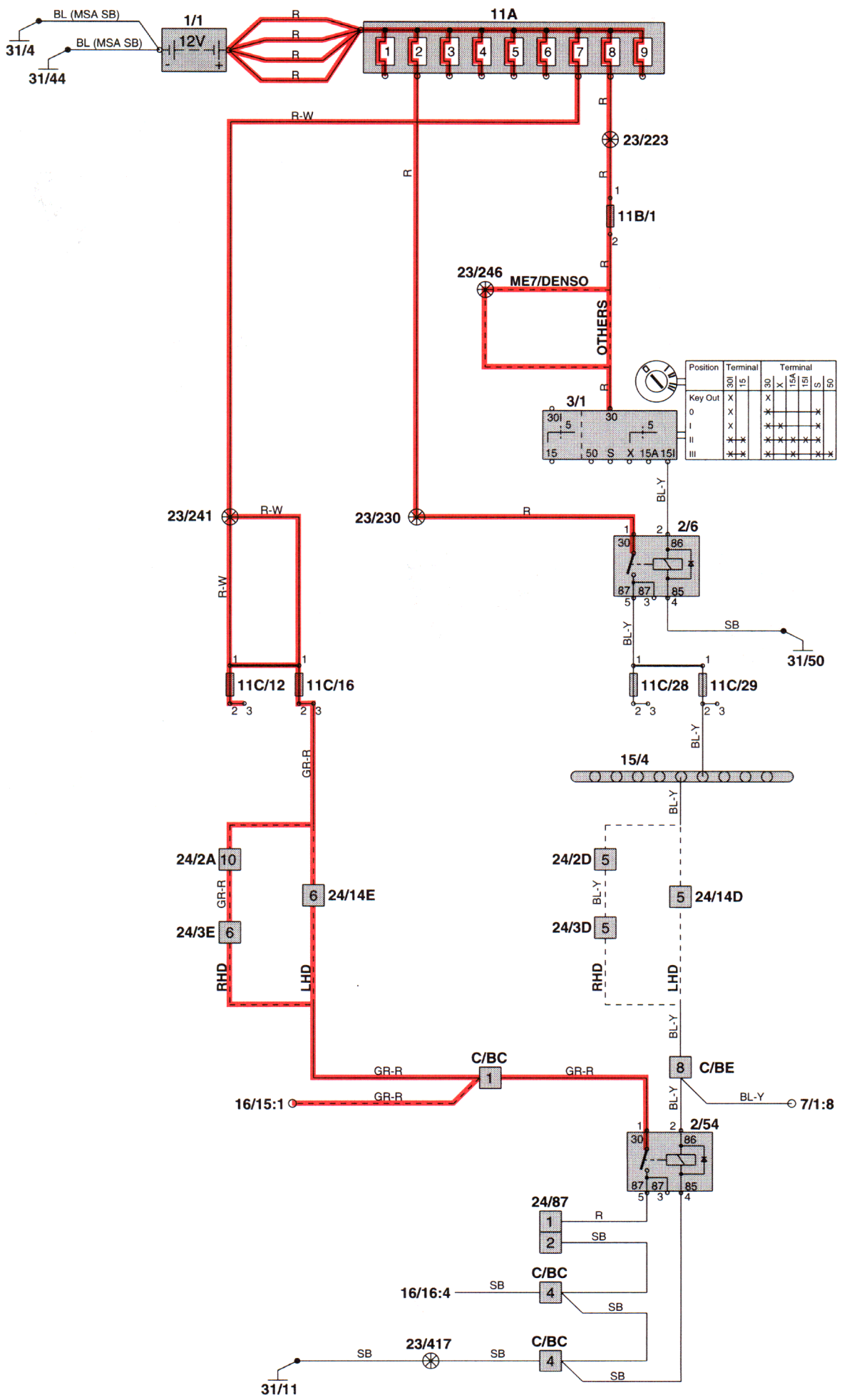

Seat belt reminder

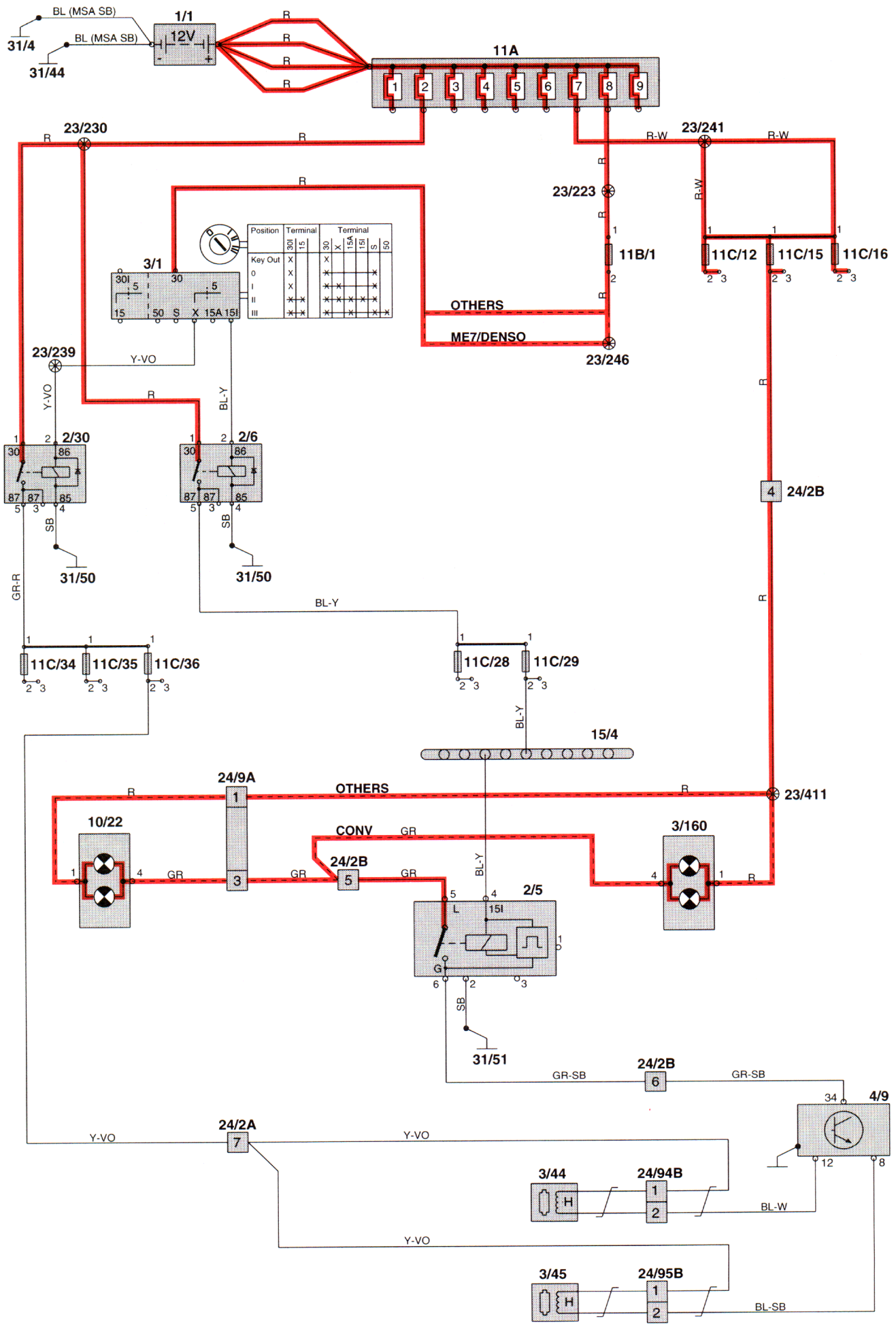

Seat belt and key reminder
USA, Canada, Korea and Australia

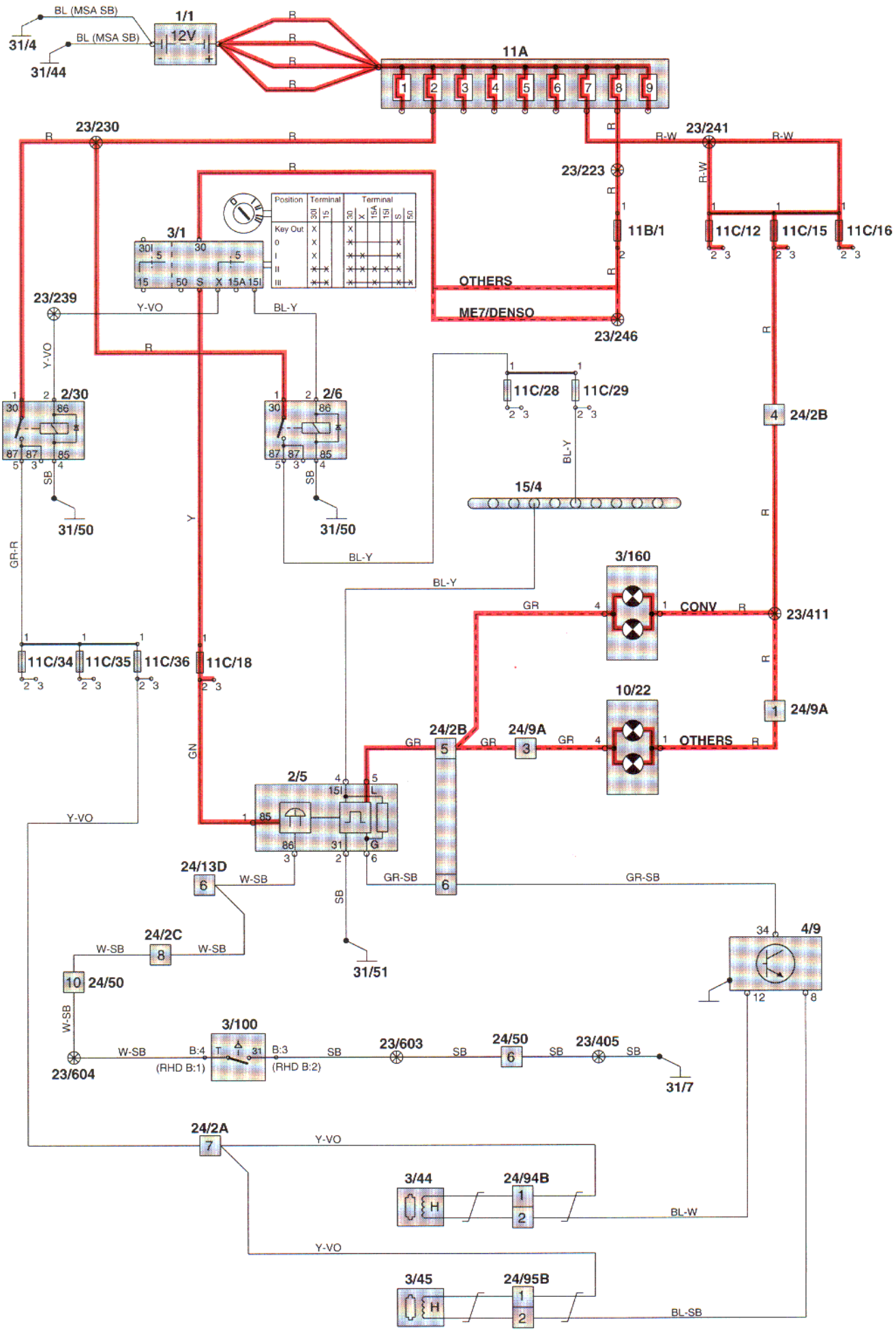

Combined instrument panel

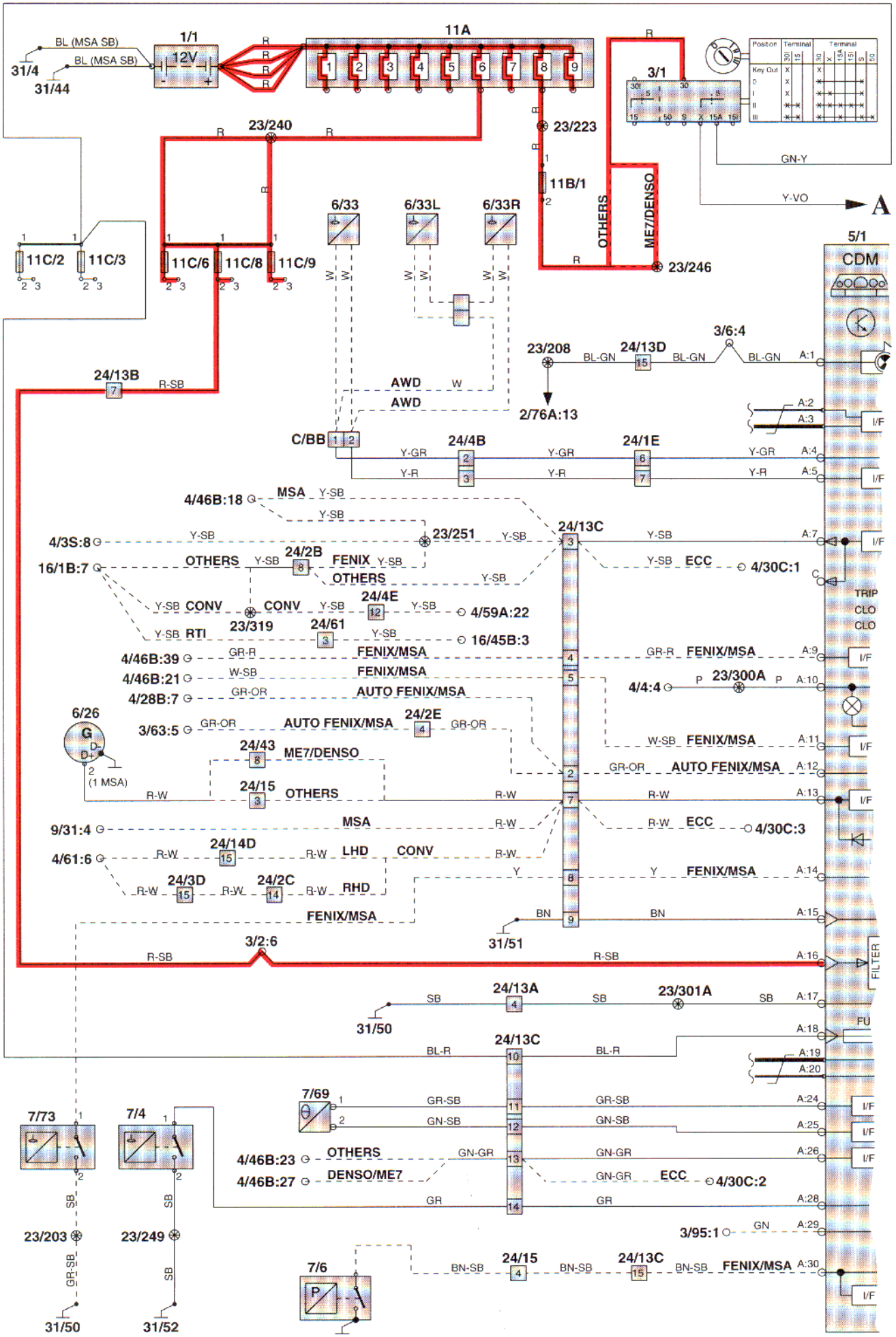

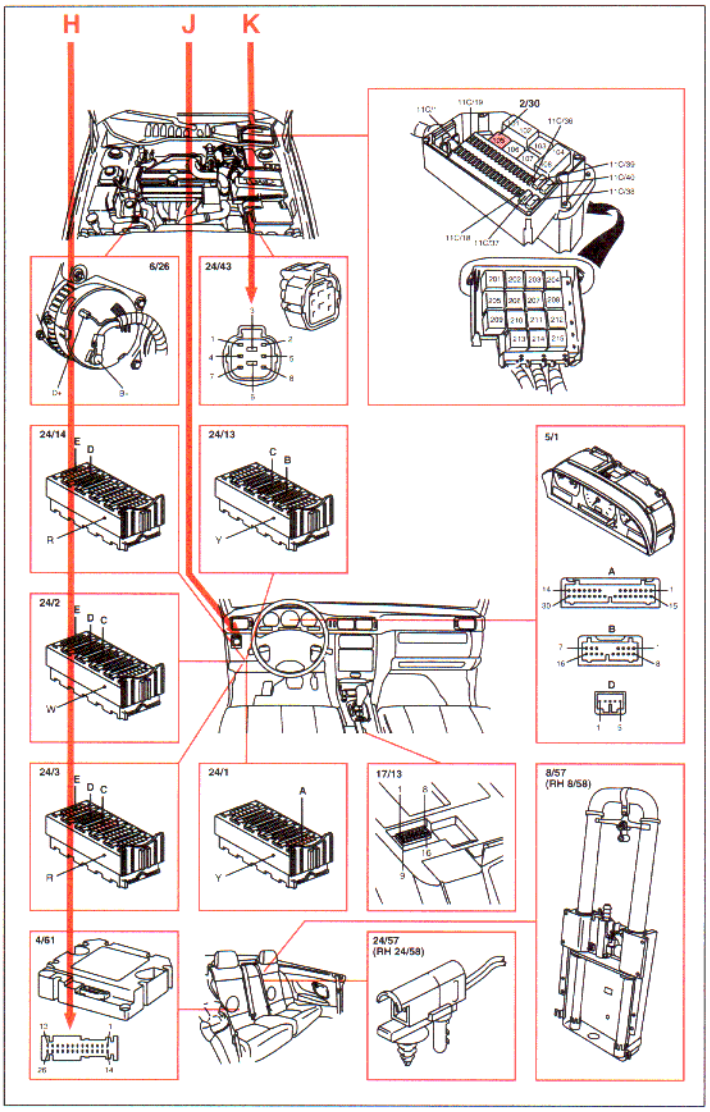

Explanation of symbols , continued

= Symbols for CAN-communication

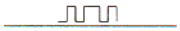

= Serial communication

= DIN cables, coaxial cables etc.

Table

Certain multi-path switches are described in the book according to a table. see the example below. The table is used to read off when the terminals are electrically connected to each other.

Example. In position III, terminal 30 is connected to terminal 15A, S, and 50.

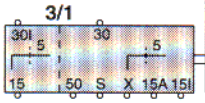

Position	Terminal		Terminal					
	30I	15	30	X	15A	15I	S	50
Key Out	X		X					
0	X		X				X	
I	X		X	X			X	
II	X	X	X	X	X	X	X	
III	X	X	X		X		X	X

D. Junction points

The junction points are numbered. There is a list of the different junction points in the manual. It shows which other components the junctions points are joined to. The locations are shown in the section "Routing of cable harnesses in the car".

E. Electrical distribution

Supply to the fuse is displayed in its entirety in the section "Electrical distribution".

F. Abbreviations

There are a number of abbreviations used in the book. These are explained in the section "Abbreviations".

Example. R-W = Red-white

G. CAN-communication

Cables which are drawn as broken lines are displayed in their entirety in the section "Data communication".

H. Components

This shows which different positions the different cables are connected to on the relevant component.

J. Location of components

It shows where the function components are placed.

K. Connector

Connectors which are an interface between two cable harnesses are described in the section "Connectors".

Fuses, 1A/1-9, in the relay / fuse box in the engine compartment

No.	Fuse function	A
11A/1	Engine cooling fan (FC)	60
11A/2	Fuses 11C/25-29 via overload relay 15I, Fuses 11C/30-37 (CONV 11C/30-36) via overload relay X	50
11A/3	Starter motor (Not MSA), Heater plugs coolant (MSA)	50
11A/4	ABS control module	50
11A/5	Main lamp relay with bulb failure warning sensor	50
11A/6	Fuses 11C/5-10, Starter motor (MSA)	60
11A/7	Fuses 11C/11-17, 11C/39-40 and 11C/41-42 (CONV)	50
11A/8	Fuse 11B/1, Fuses 11B/2-5 via main relay fuel injection system	60
11A/9	Glow plugs 1-5 via Glow plug relay (diesels) (MSA), Fuse 11C/37 via relay window lift mechanisms right-hand side (CONV), Fuse 11C/38 via relay window lift mechanisms left-hand side (CONV)	60

Fuses, 11B/1-5, in relay / fusebox in engine compartment

No.	Fuse function	A
11B/1	Ignition lock, Engine management system (Not MSA), Emissions control (DENSO/ME7), Engine cooling fan (FC) (DENSO/ME7), Electronically controlled automatic transmission AW 50-42, Cruise control (DENSO/ME7), Electronic climate control ECC (DENSO/ME7)	10 (15 S70/V70 DENSO/ME7)
11B/2	Engine management system, Engine cooling fan (FC) (DENSO/ME7), Cruise control (DENSO/ME7), Electronically controlled automatic transmission AW 50-42 (DENSO/ME7), Manual climate control MCC (DENSO/ME7), Electronic climate control ECC (DENSO/ME7)	15 (10 FENIX/ MSA)
11B/3	Engine management system	15 (20 FENIX)
11B/4	Electronically controlled automatic transmission AW 50-42 (FENIX/MSA), Engine management system (DENSO/ME7)	15 (10 FENIX/ MSA)
11B/5	Engine management system(DENSO/ME7), Engine cooling fan (FC) (FENIX/MSA), Manual climate control MCC (FENIX/MSA), Electronic climate control ECC (FENIX/MSA), Emissions control	20 (10 FENIX/ MSA)

Fuses, 11C/1-24, in the central electrical unit

No.	Fuse function	A
11C/1	Central locking (C70), Soft-top operation	10
11C/2	Fog lamp, Tow hitch wiring, Combined instrument panel	10 (15 CONV)
11C/3	RTI Road Traffic Information, Anti-theft alarm, Interior lighting, Central locking , Electronically controlled automatic transmission AW 50-42 (FENIX/MSA)	10 (15 CONV)
11C/4	Engine management system (DENSO/ME7), Immobilizer, Shift-lock automatic transmission, ABS brake system	10
11C/5	Engine cooling fan (FC), Diagnostics, Standard heater, Manual climate control MCC, Electronic climate control ECC	15
11C/6	Anti-theft alarm, Interior lighting, Central locking	20
11C/7	Radio, Radio with 4x50 W extra amplifier (S70/V70)	15 (20 S70/V70 DENSO/ME7)
11C/8	Light switch, Instrument and control panel lighting, Immobilizer, Combined instrument panel	15
11C/9	Radio (C70), Heated rear seat	20 (30 C70)
11C/10	Anti-theft alarm, Central locking	10
11C/11	Stop (brake) lamp, Cruise control (FENIX/MSA), Electronically controlled automatic transmission AW 50-42 (FENIX/MSA), ABS Brake system, Tow hitch wiring	10 (15 S70/V70 DENSO/ME7)
11C/12	Radio (C70), Additional heater	30
11C/13	High and low beam, Anti-theft alarm, Turn signal lamp and hazard warning signal flashers, Central locking, Interior lighting (S70/V70)	20 (15 C70)
11C/14	Electrical retracting door mirrors, Rear demist and electrically heated door mirrors	30 (40 COUP)
11C/15	Interior lighting, Seat belt reminder, Seat belt reminder and key warning, Road Traffic Information RTI, Power windows(CONV)	10
11C/16	Radio, Towing hitch cable harness, Accessory wiring, Cool box wiring, Radio with 4x50 W extra amplifier (S70/V70)	30
11C/17	Fog lamp	20
11C/18	Seat belt reminder and key reminder, High and low beam	10
11C/19	High beam, Accessory wiring	15
11C/20	High beam, Combined instrument panel	15
11C/21	Low beam	15
11C/22	Low beam	15
11C/23	Fog lamp (EU/OS), Parking lamps, Tail lamp and license plate lighting, Tow hitch wiring	10
11C/24	Parking lamps, Tail lamp and license plate lighting	10

Fuses, 11C/25-42, in the central electrical unit

No.	Fuse function	A
11C/25	-	10
11C/26	Light switch, Instrument and control panel lighting	15
11C/27	Back-up (reversing) lamp, Turn signal lamp and hazard warning signal flasher, RTI Road Traffic Information, Electronically controlled automatic transmission AW 50-42, Rear view mirror with automatic dimming	15
11C/28	Heated seats, Heated rear seat	25
11C/29	*15-rail (15/4):* Cruise control (FENIX/MSA), Parking lamps, Tail lamp and license plate lighting, Stop (brake) lamp, Anti-theft alarm, Cool box wiring, Seat belt reminder, Seat belt reminder and key warning, Rear demist and door mirrors, Electrically retractable door mirrors, Additional heater, Tow-hitch wiring, Soft top operation	10
11C/30	Cigarette lighter/12V-outlet	15 (20 S70/V70 DENSO/ME7)
11C/31	Standard heater STD, Manual climate control MCC, Electronic climate control ECC	25
11C/32	Instrument- and control panel lighting, Radio, Radio with 4x50 W extra amplifier (S70/V70), Power sun roof, Electrical retracting door mirrors, Electronic climate control ECC, Central locking (CONV), Soft-top operation	10
11C/33	*X-rail (15/8):* Headlamp range adjustment, Rear windshield washer	15
11C/34	Horn, Windshield and headlamp washer	25
11C/35	Interior lighting, Accessory wiring, Road Traffic Information RTI, Power seat without memory, Cargo compartment fans, Remote controlled garage door opener, Power windows (CONV), Soft-top operation, Rear view mirror with automatic dimming, Rear demist and electrically heated door mirrors (CONV), Power door mirrors (CONV), Electrical retracting door mirrors (CONV)	10
11C/36	Seat belt reminder, Seat belt reminder and key reminder, Supplemental Restraint System SRS	15 (10 S70/V70 DENSO/ME7)

Automatic fuses

11C/37	Power windows, Power sun roof, Power door mirrors (Not CONV), Power retracting door mirrors (Not CONV), Rear demist and electrically heated door mirrors (Not CONV)
11C/38	Power windows (C70)
11C/39	Power seats (LH)
11C/40	Power seats (RH)
11C/41	Soft-top operation (CONV)
11C/42	Soft-top operation (CONV)

Relays

Relays in the relay / fusebox in the engine compartment

1	Main relay fuel injection system (2/32)
2	Glow plug relay (diesels) (2/14) (MSA)
3	Electronic throttle module (ETM) relay (2/134) (DENSO/ME7) Relay starter motor (2/35)
4	Relay A/C (2/22)

Relays in the central electrical unit

101-102	Control module, cruise control (4/3) (FENIX)
103	Relay fuel pump (FP) (2/23) (Not MSA)
104, 108	Headlamp relay with bulb failure warning sensor (2/1)
105	Overload relay X-supply (2/30)
106	Overload relay 15I-supply (2/6)
201	Fog lamp relay (2/2)
202	Relay alarm horn (2/77)
203	Intermittent wiper relay (2/4)
204	Intermittent relay tailgate wiper (2/16) (S70/V70) Audible signal soft-top (7/117) (CONV)
205	Relay rear hatch opening (2/67) (CONV)
206	Relay window lift mechanisms left-hand side (2/99) (CONV)
208	Relay heated rear windshield/door mirrors (2/44)
210	Relay window lift mechanisms right-hand side (2/100) (CONV)
212	Relay seat belt reminder/key warning (2/5)
214	Automatic fuses 11C/41-42 (CONV)

Other relays

2/11 Engine cooling fan relay

2/43 Relay heated rear seat (S70/V70)

2/54 Relay coolbox (V70)

2/74 Relay heating plugs coolant (MSA)

7/1 Bulb failure warning sensor, rear

Ground terminals

31/7
S70/V70

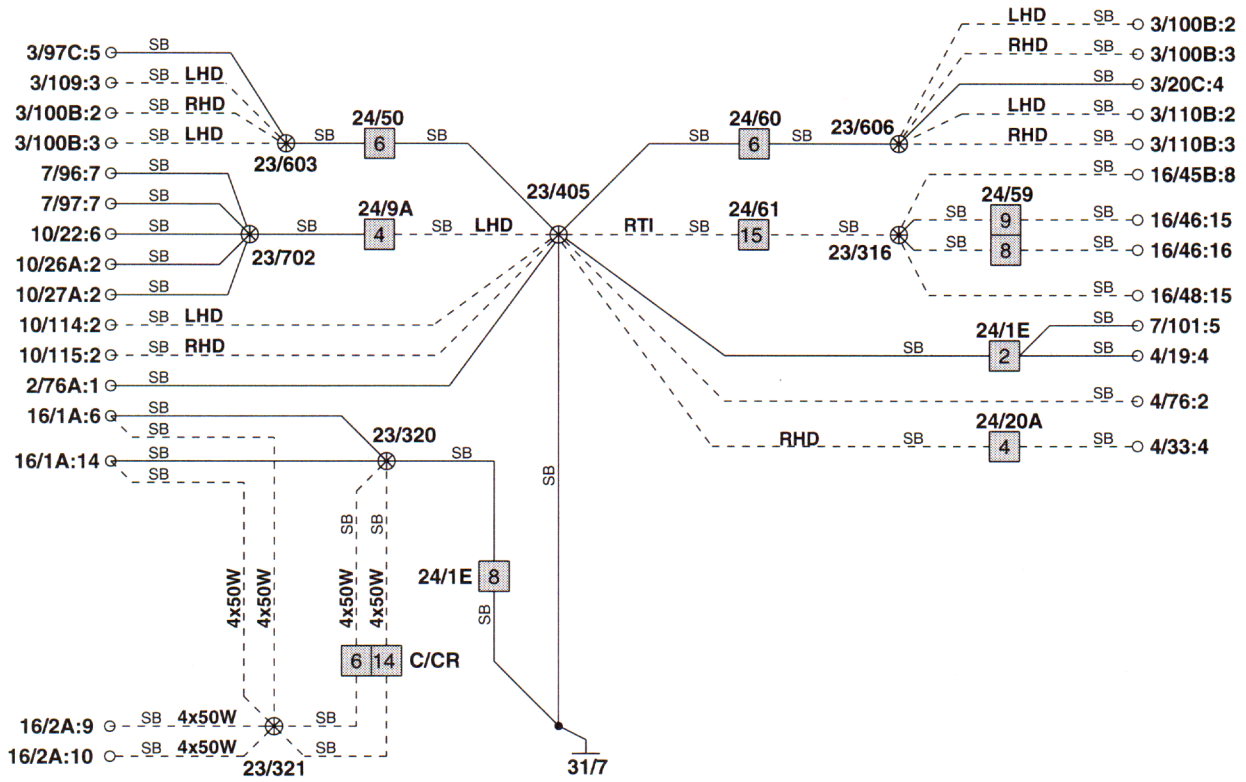

31/11
C70

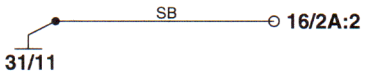

31/11
S70

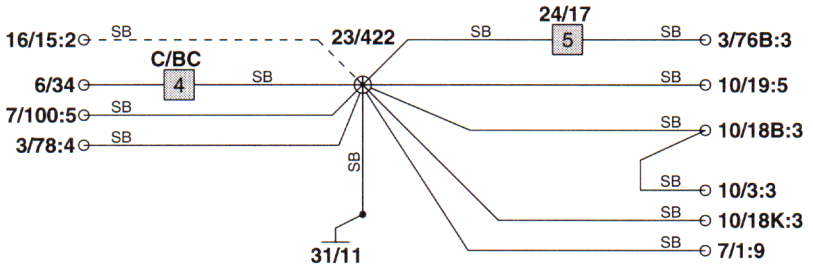

31/11
V70

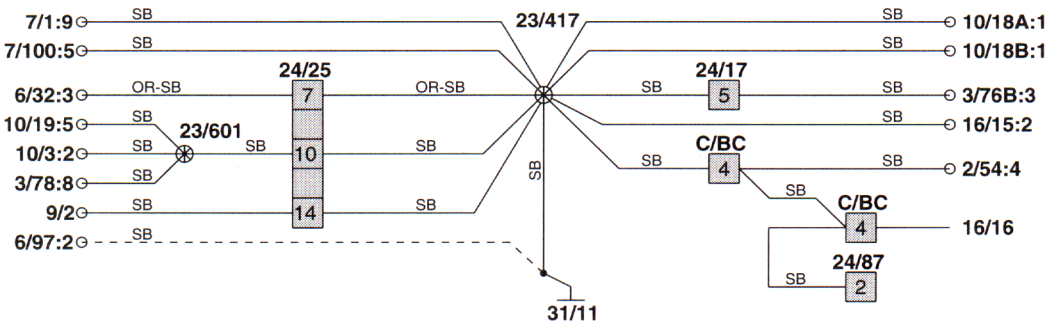

31/12 C70

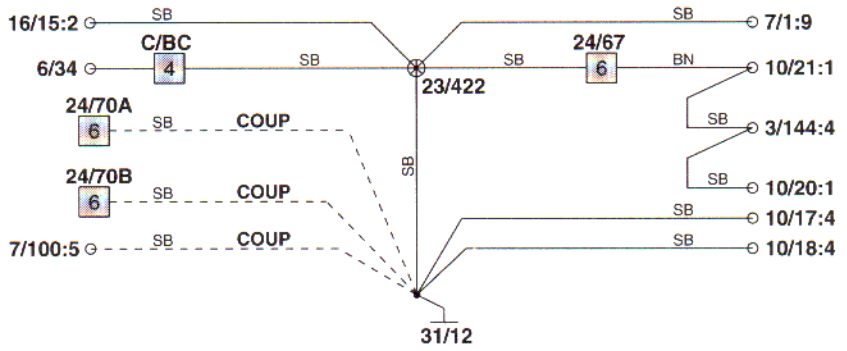

31/12 S70/V70

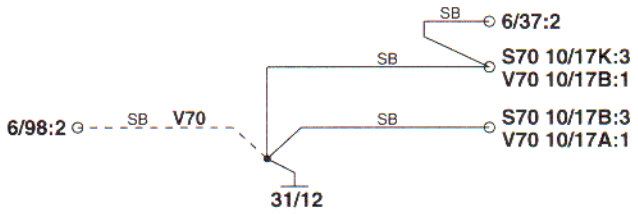

31/15 CONV

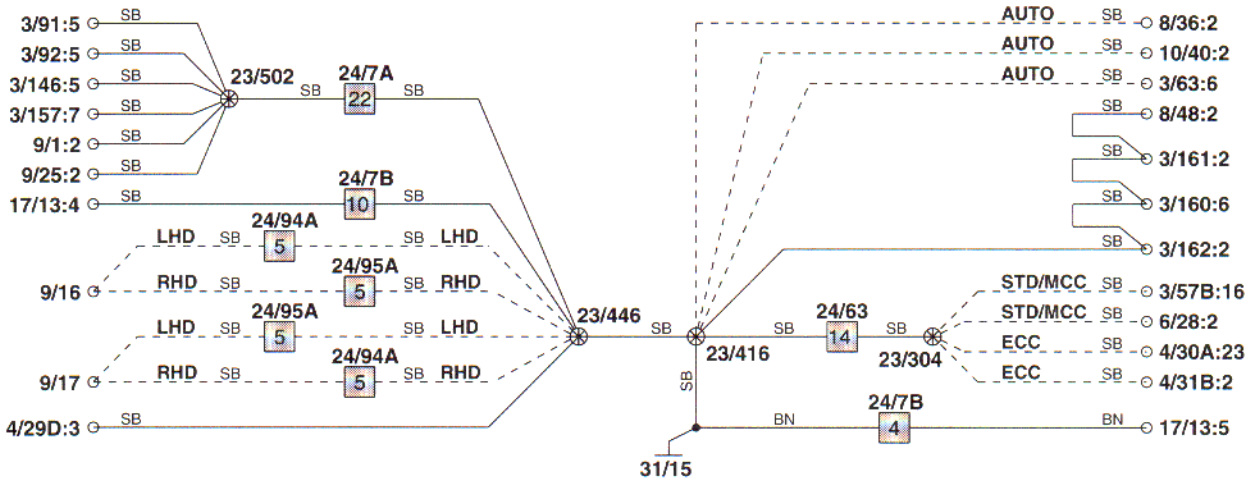

31/15 COUP

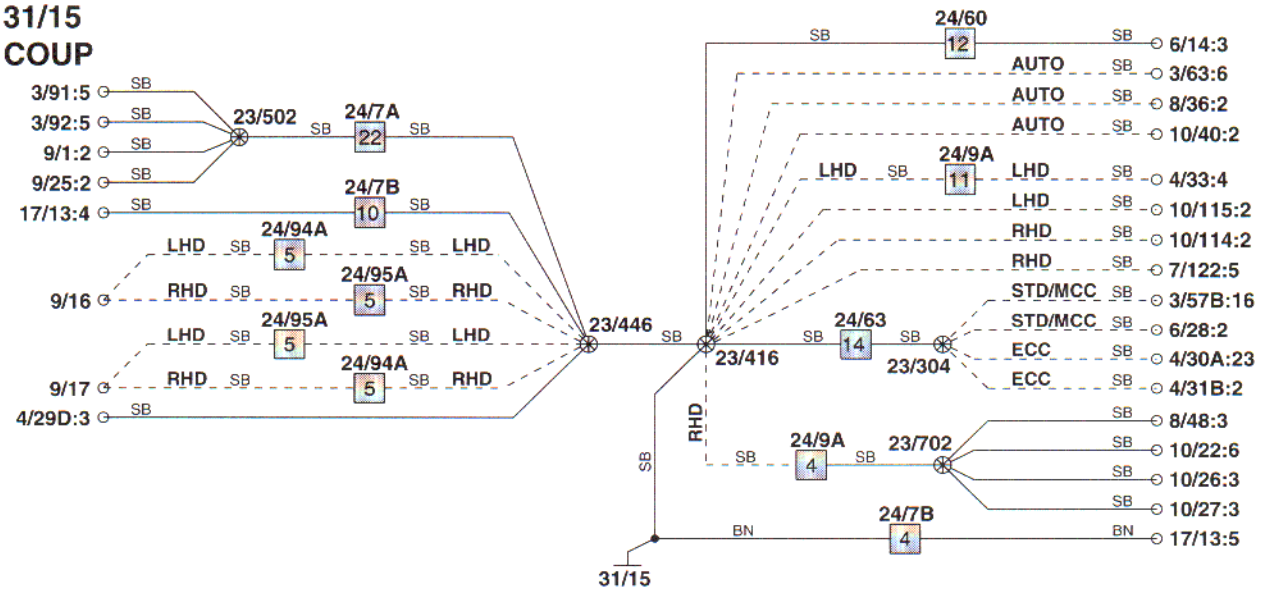

Ground terminals

31/15
S70/V70

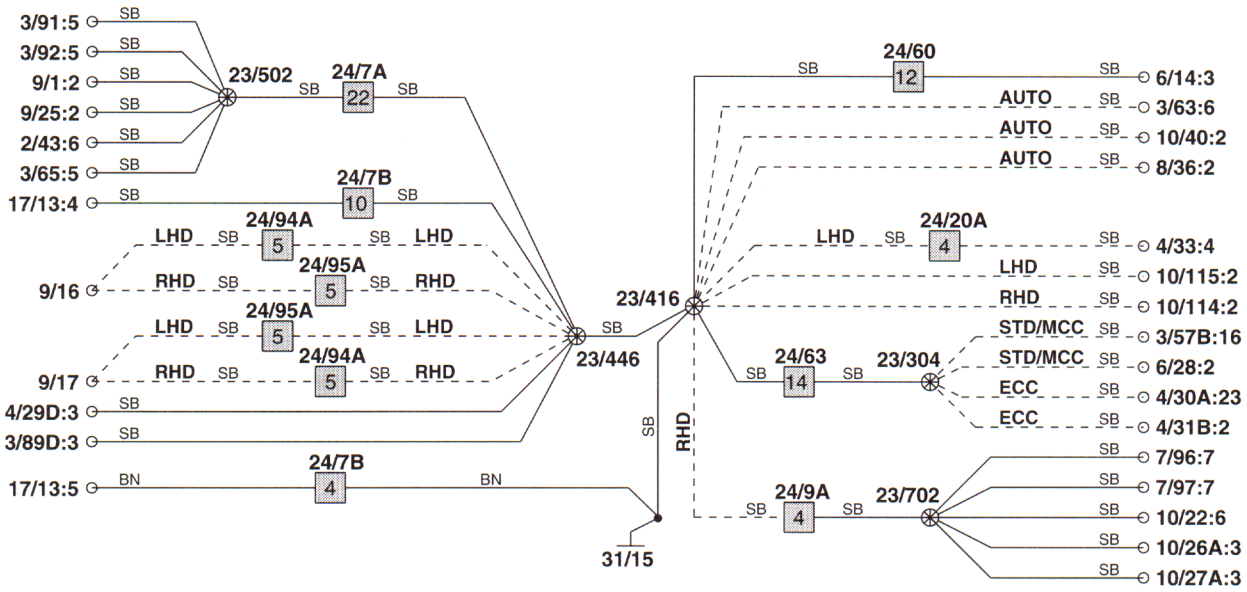

31/44

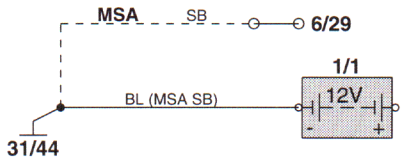

31/47
CONV

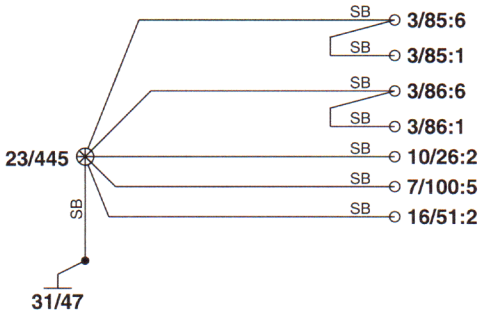

31/47
COUP

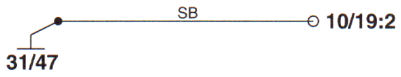

31/48
CONV

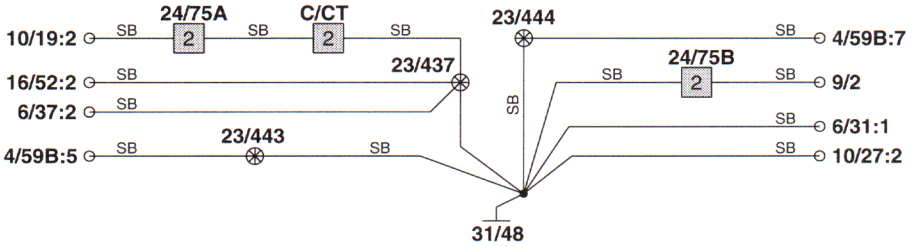

31/48
COUP

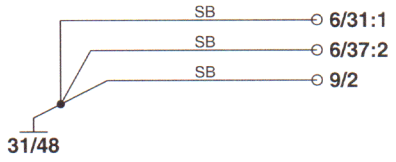

31/48
S70/V70

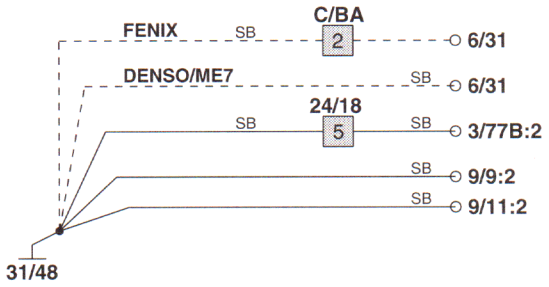

31/50

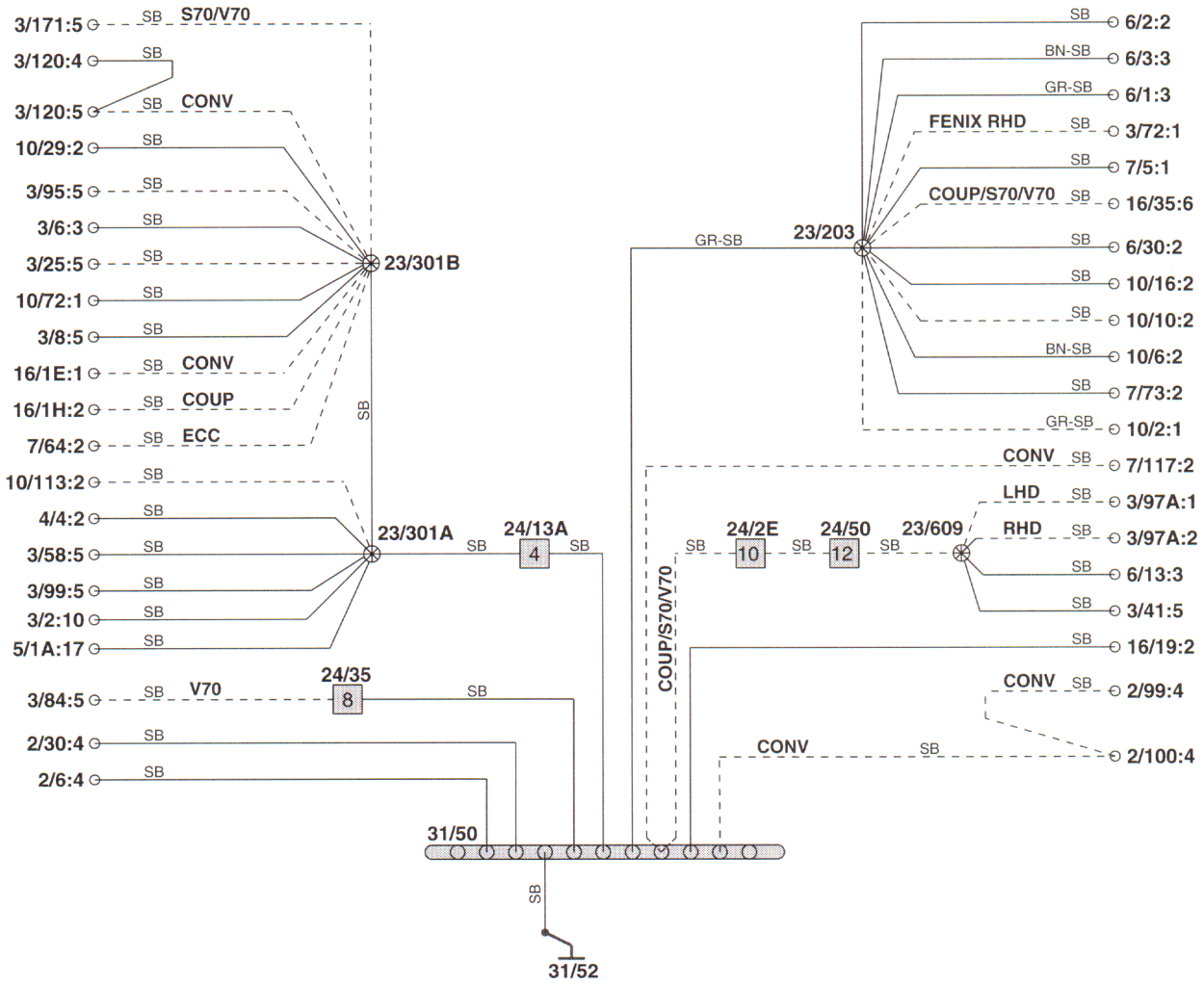

Ground terminals

31/51

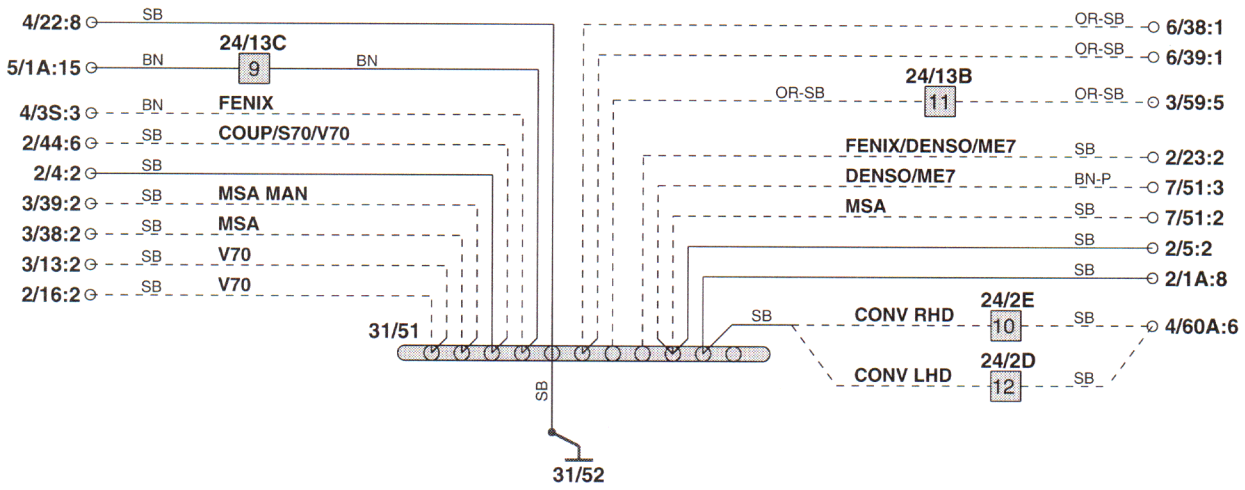

31/52

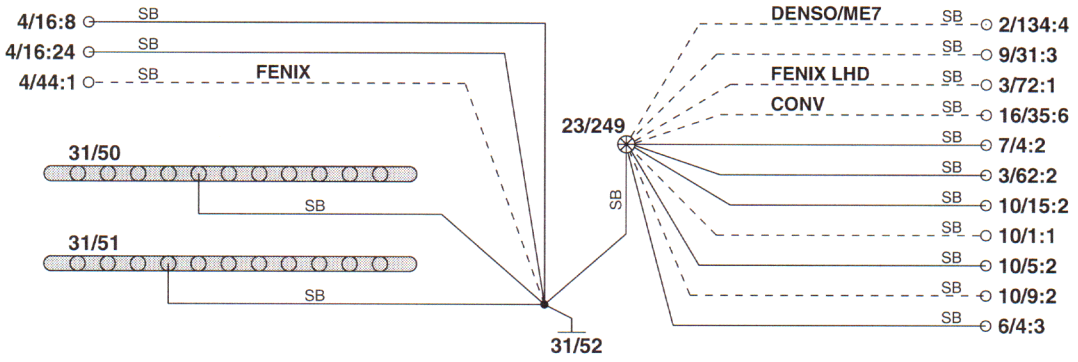

31/55

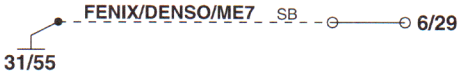

31/71 FENIX

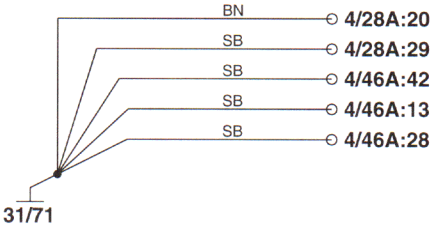

31/71 DENSO

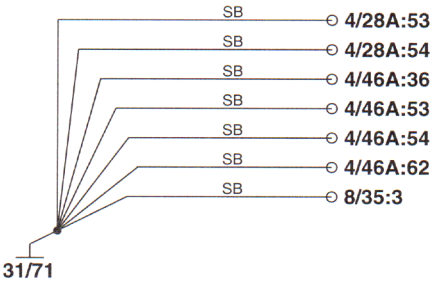

31/71
ME7

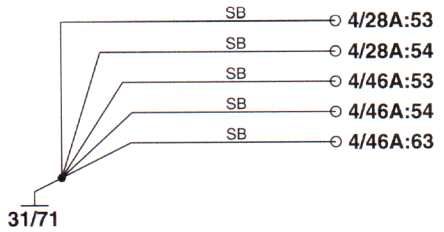

31/71
MSA

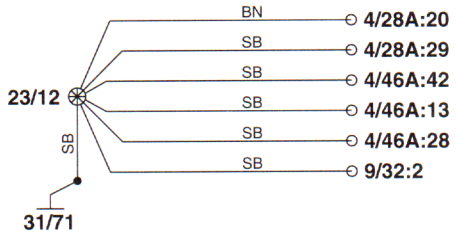

31/88

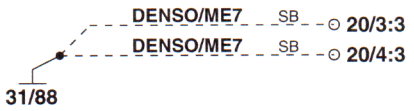

31/89

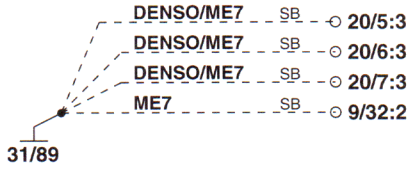

31/91

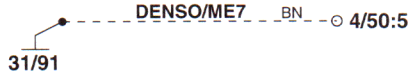

Ground points
C70 Convertible

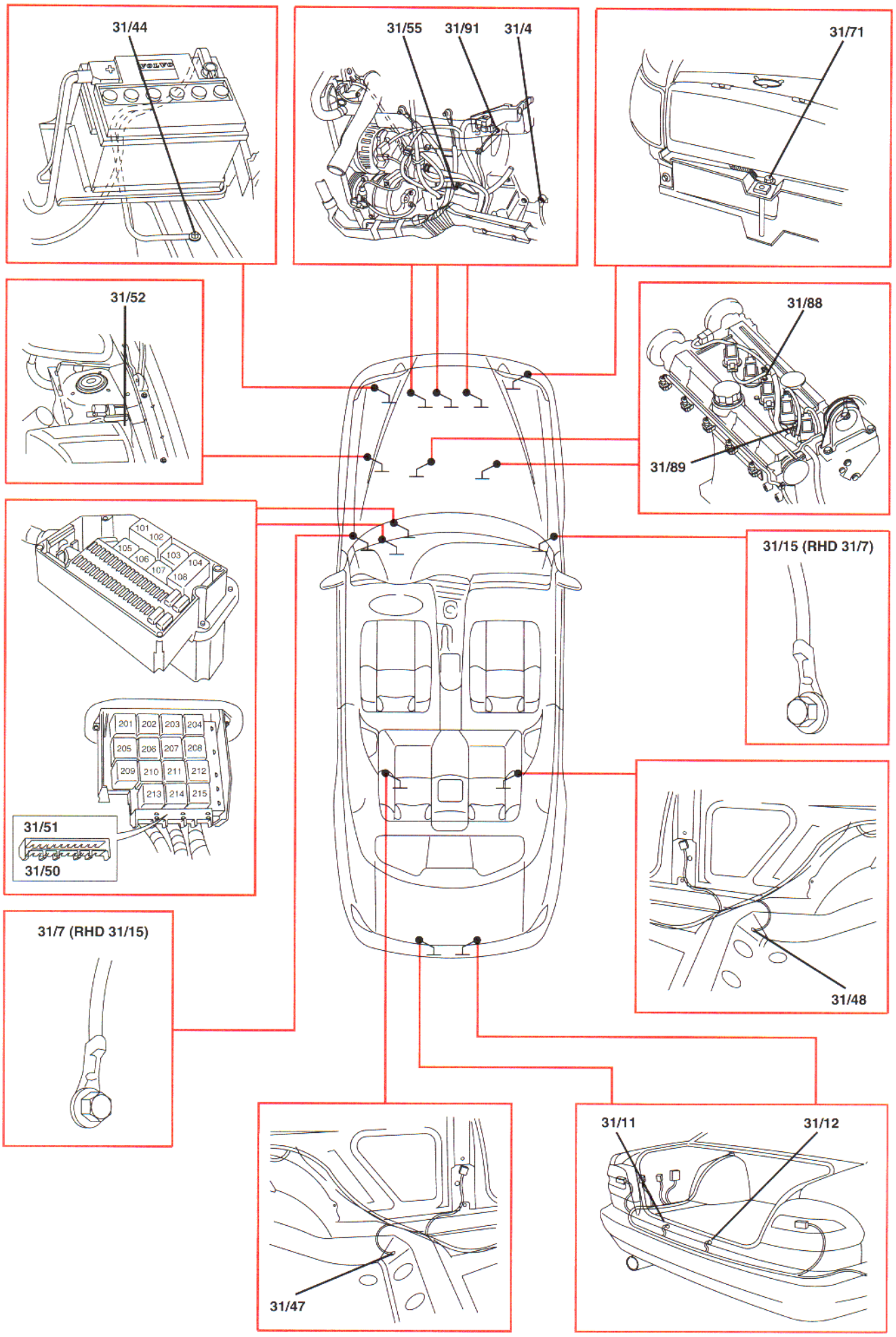

Ground points
C70 coupé

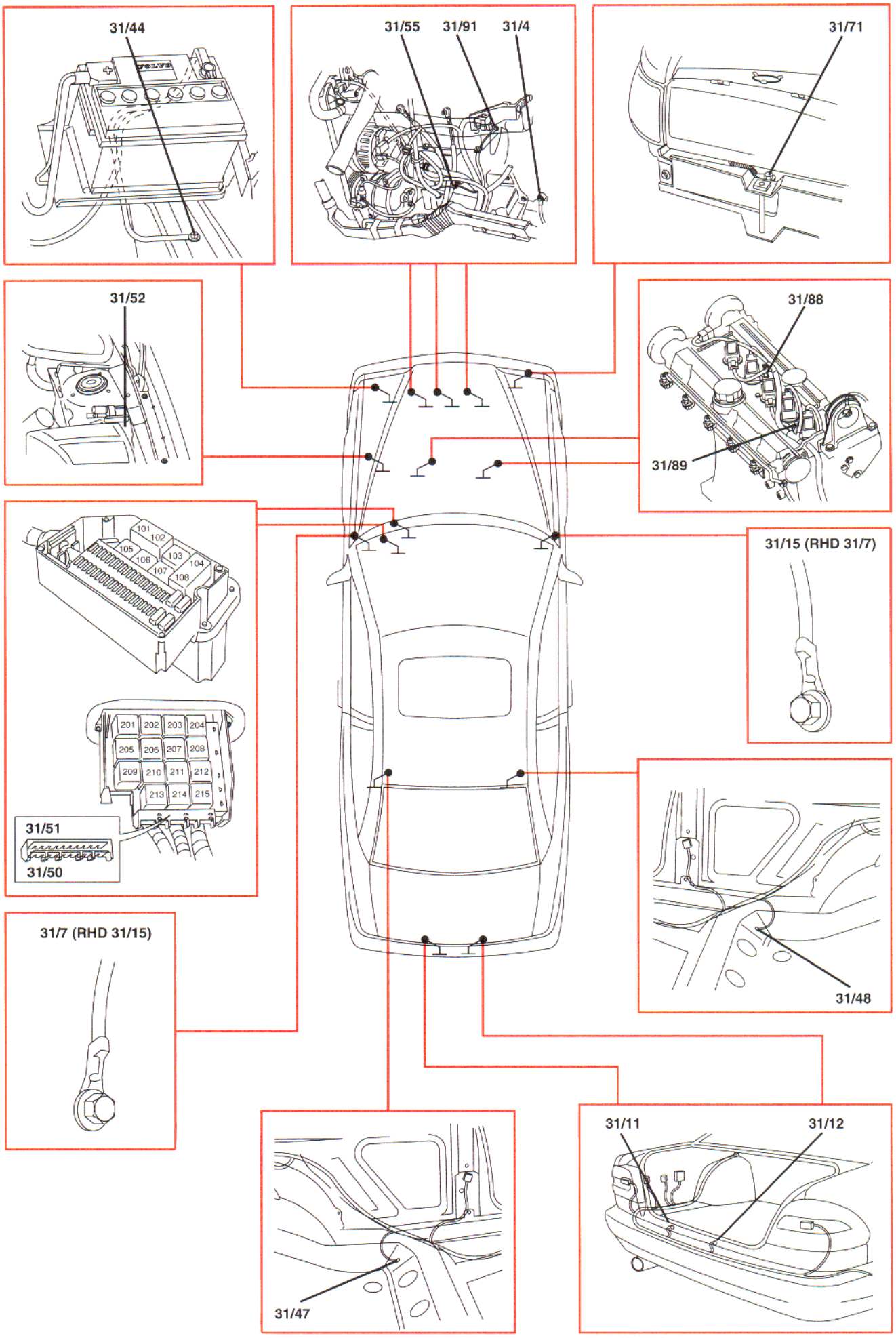

Ground points
S70

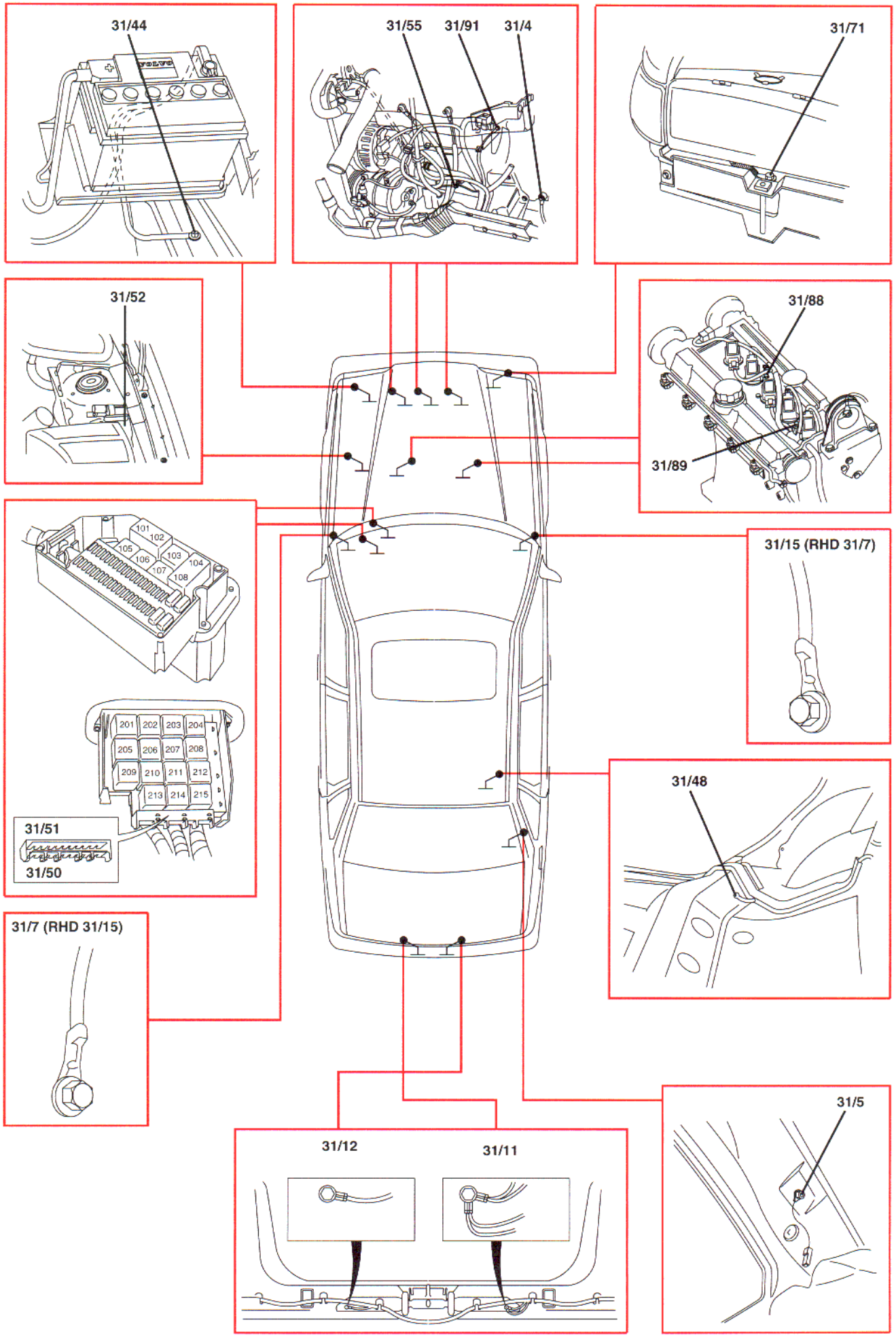

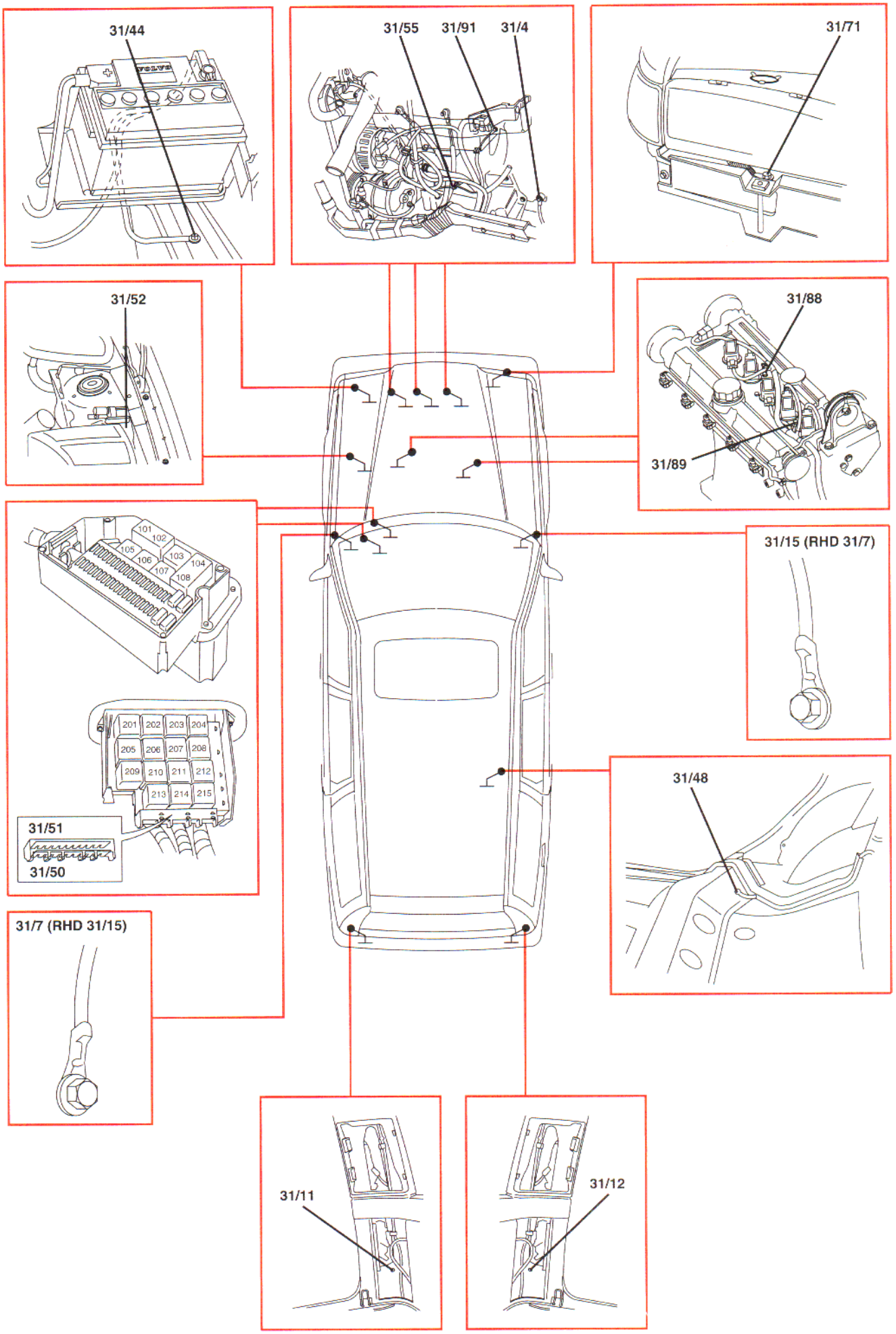
31/44
31/55
31/91
31/4
31/71
31/52
31/88
31/89
101
102
103
104
105
106
107
108
201
202
203
204
205
206
207
208
209
210
211
212
213
214
215
31/51
31/50
31/15 (RHD 31/7)
31/48
31/7 (RHD 31/15)
31/11
31/12

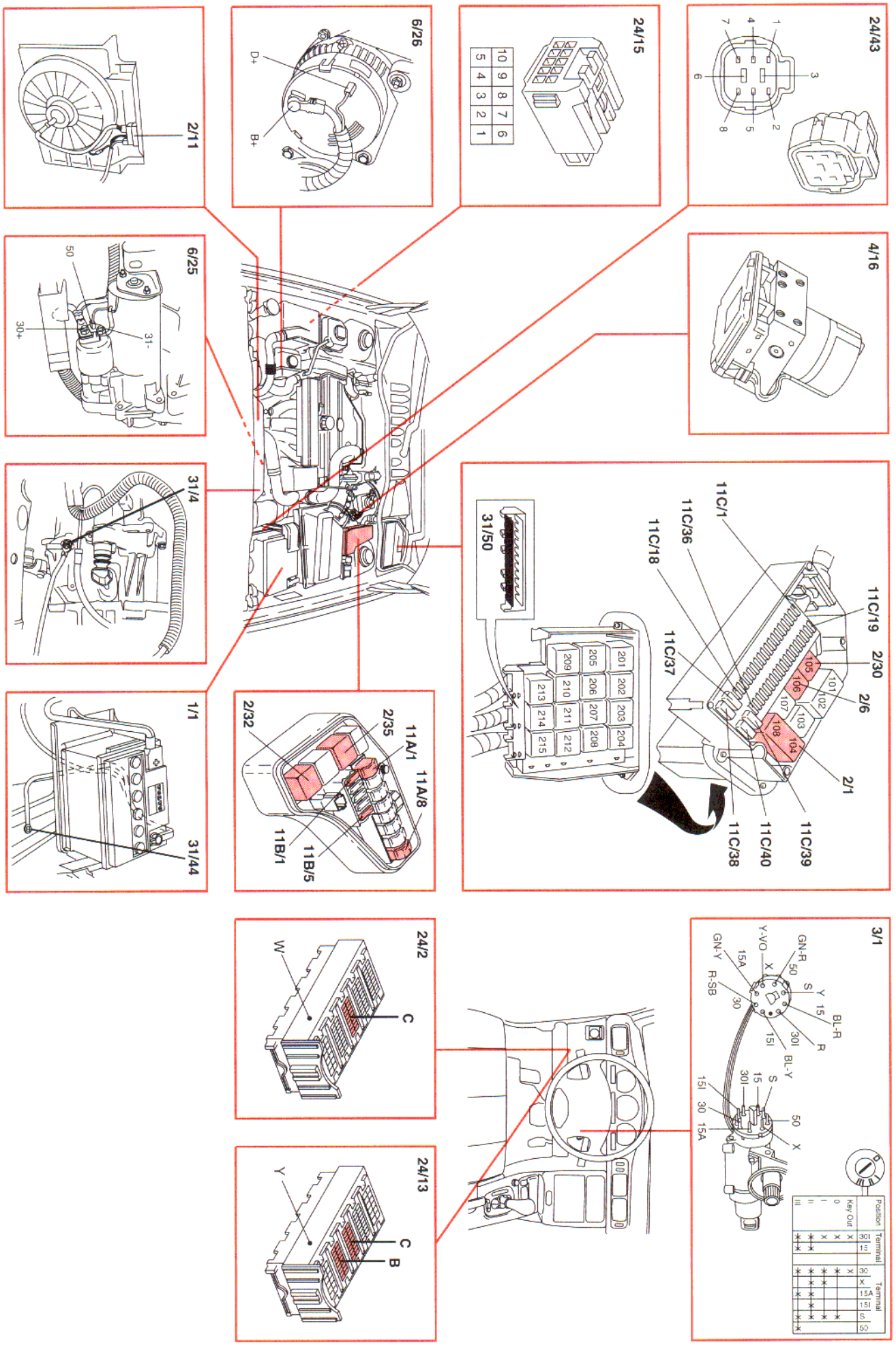
24/43
1
2
3
4
5
6
7
8
4/16
24/15
10 9 8 7 6
5 4 3 2 1
6/26
D+
B+
2/11
6/25
50
30+
31-
31/4
1/1
31/44
11C/19
2/30
2/6
2/1
11C/1
11C/36
11C/18
11C/37
11C/39
11C/40
11C/38
101 102 103 104 105 106 107 108
201 202 203 204 205 206 207 208 209 210 211 212 213 214 215
31/50
11A/1
11A/8
2/35
2/32
11B/1
11B/5
3/1
GN-R
50
S
Y
15
BL-R
R
30I
15I
BL-Y
S
15
30I
50
X
15I
30
15A
Y-VO
X
15A
GN-Y
R-SB
30
Position
Key Out
0
I
II
III
Terminal
30I
15I
30
X
15A
15I
S
50
24/2
W
C
24/13
Y
C
B

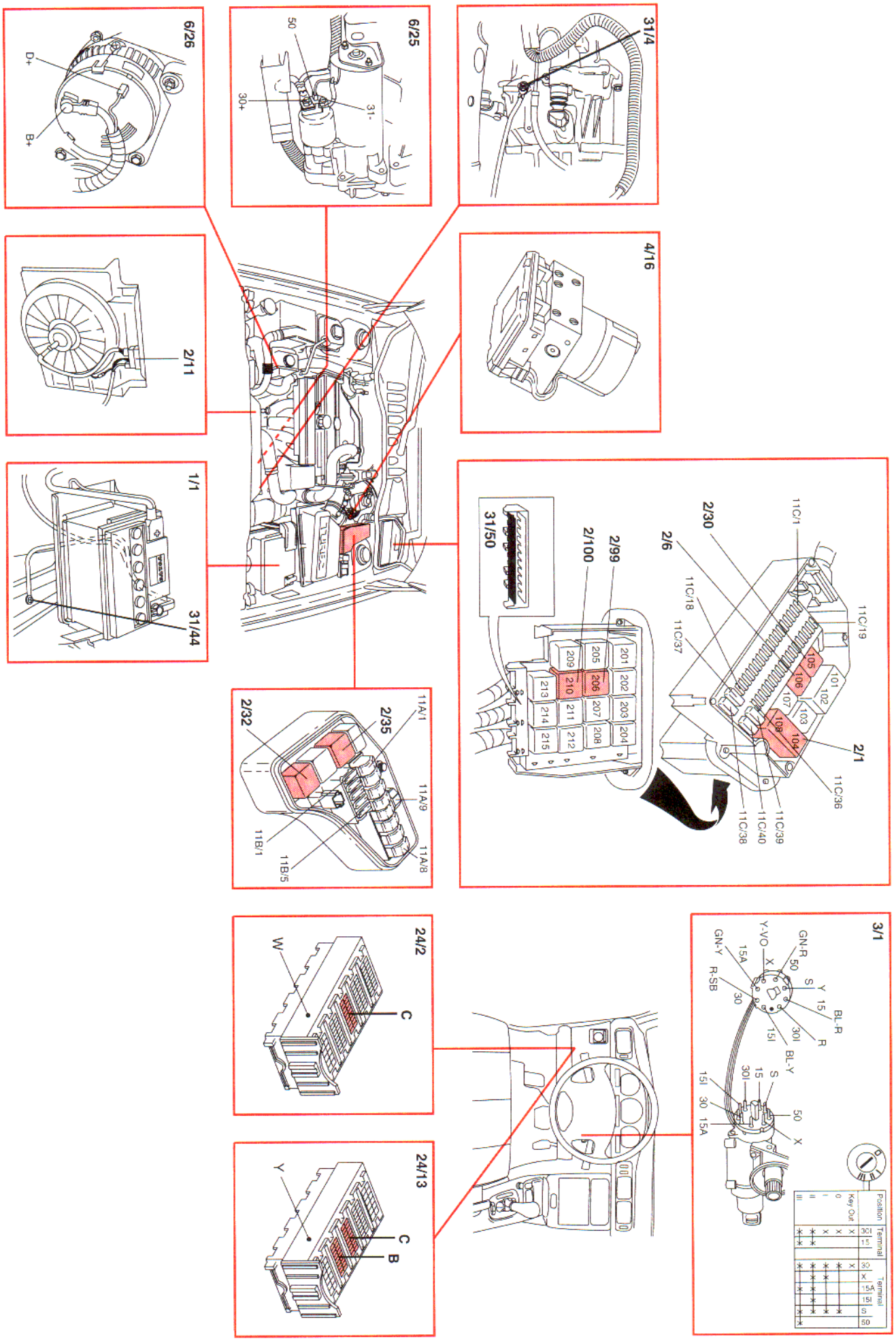
31/4
6/25
50
30+
31-
6/26
D+
B+
4/16
2/11
1/1
31/44
2/1
11C/19
11C/36
11C/39
11C/40
11C/38
11C/1
2/30
2/6
11C/18
11C/37
2/99
2/100
31/50
201
202
203
204
205
206
207
208
209
210
211
212
213
214
215
101
102
103
104
105
106
107
108
2/32
2/35
11A/1
11A/9
11A/8
11B/1
11B/5
24/2
W
C
24/13
Y
C
B
3/1
GN-R
50
S
Y
15
BL-R
R
30I
15I
BL-Y
S
15
30I
50
X
15I
30
15A
Y-VO
X
15A
GN-Y
R-SB
30
Position
Key Out
Terminal
30I
15
30
X
15A
15I
S
50

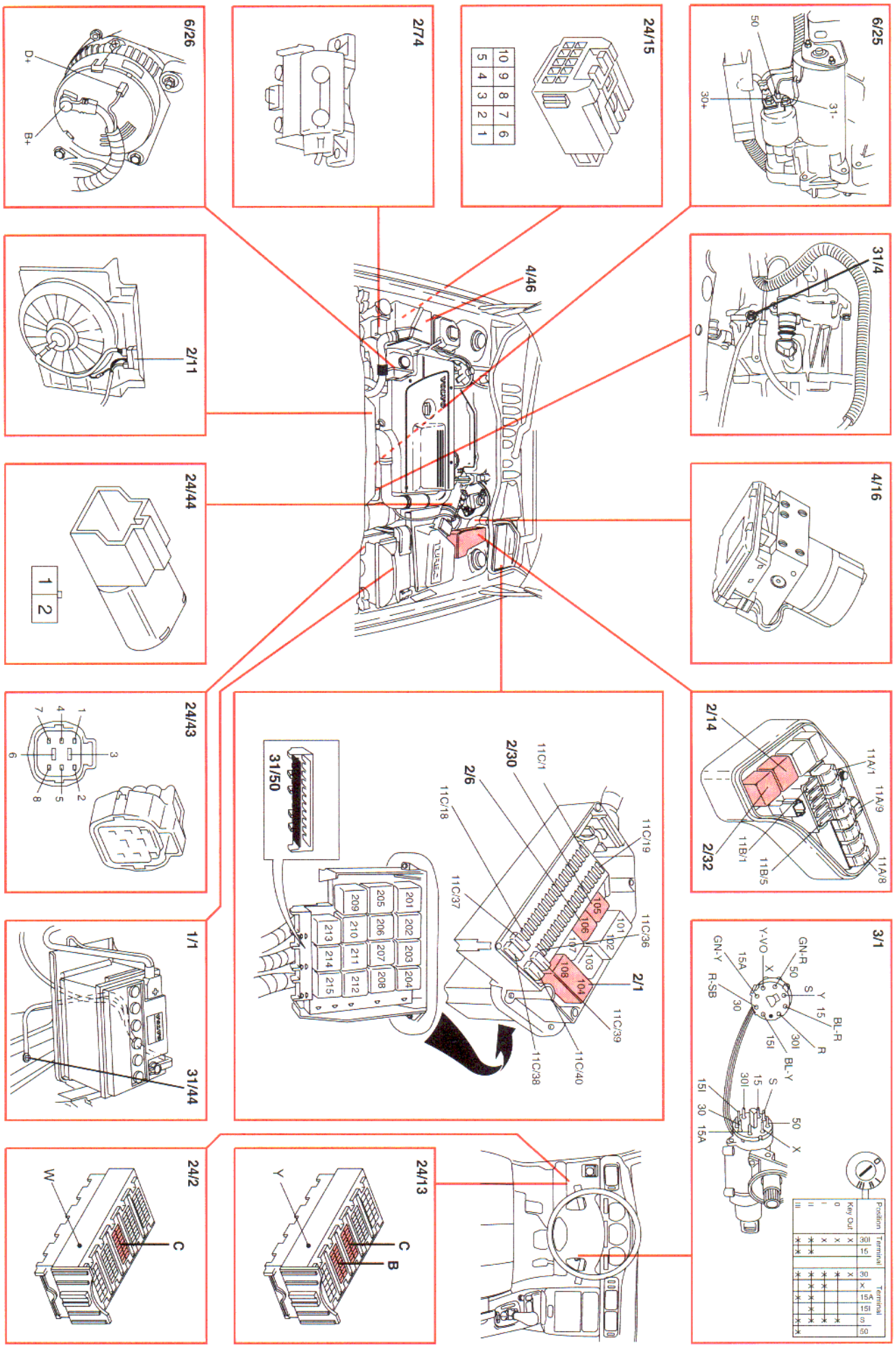
6/25
50
30+
31-
24/15
10 9 8 7 6
5 4 3 2 1
2/74
6/26
D+
B+
31/4
4/46
2/11
4/16
24/44
1 2
2/14
11A/1
11A/9
11A/8
2/32
11B/1
11B/5
24/43
1 4 7 3 6 2 5 8
11C/19
11C/36
2/1
11C/39
11C/40
11C/38
2/30
11C/1
2/6
11C/18
11C/37
101 102 103 104 105 106 107 108
31/50
201 202 203 204
205 206 207 208
209 210 211 212
213 214 215
1/1
31/44
3/1
GN-R
50
S
Y
15
BL-R
R
30I
BL-Y
15I
Y-VO
X
15A
GN-Y
R-SB
30
15I 30 15A
Position
Key Out
Terminal
III
II
I
0
30I
15
30
X
15A
15I
S
50
24/2
W
C
24/13
Y
C
B

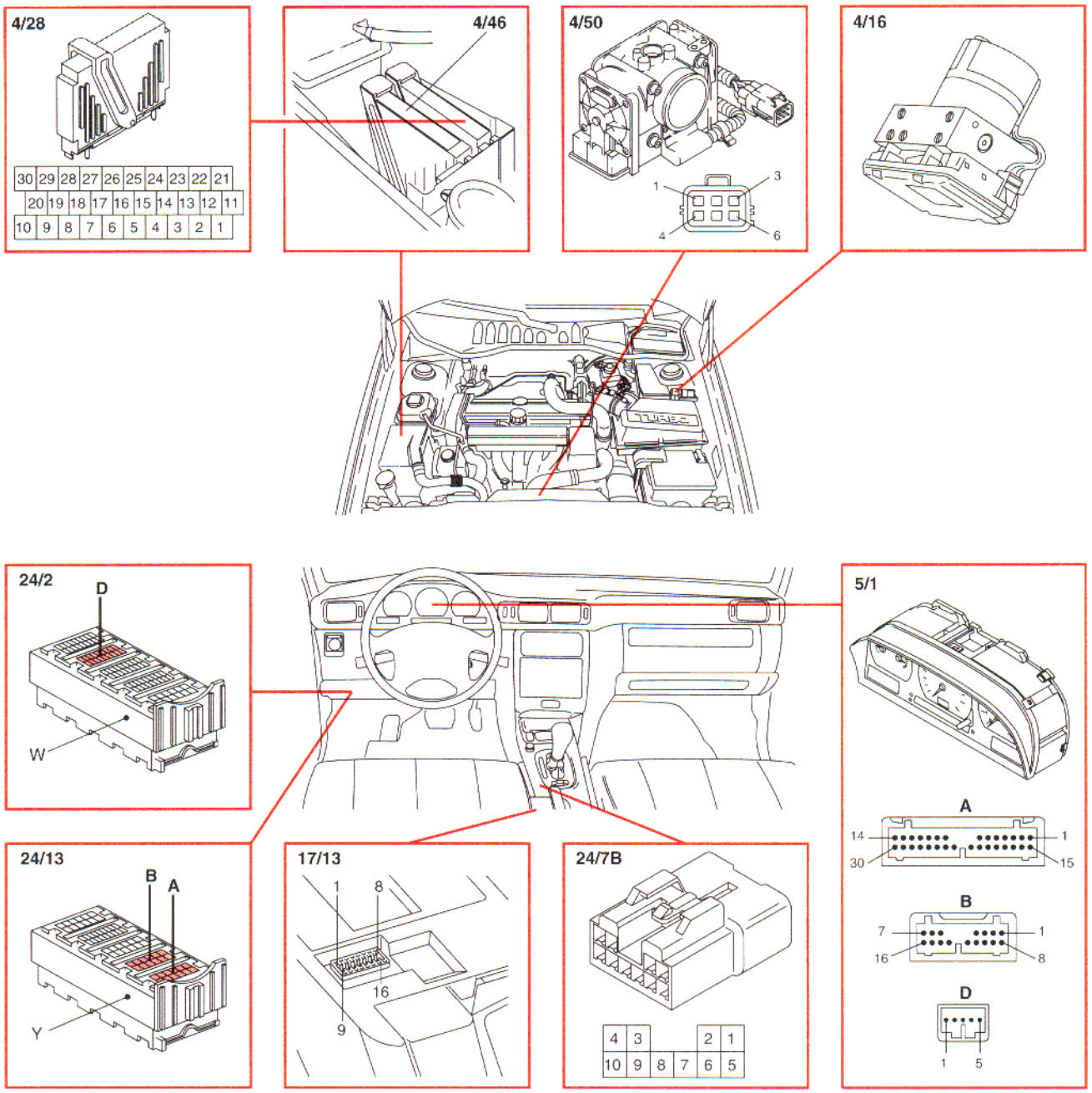
4/28
30 29 28 27 26 25 24 23 22 21
20 19 18 17 16 15 14 13 12 11
10 9 8 7 6 5 4 3 2 1
4/46
4/50
1
3
4
6
4/16
24/2
D
W
5/1
A
14
1
30
15
B
7
1
16
8
D
1
5
24/13
B
A
Y
17/13
1
8
16
9
24/7B
4 3 2 1
10 9 8 7 6 5

24/1E White 12-pin (male - female)
Firewall cable harness -Instrument panel cable harness

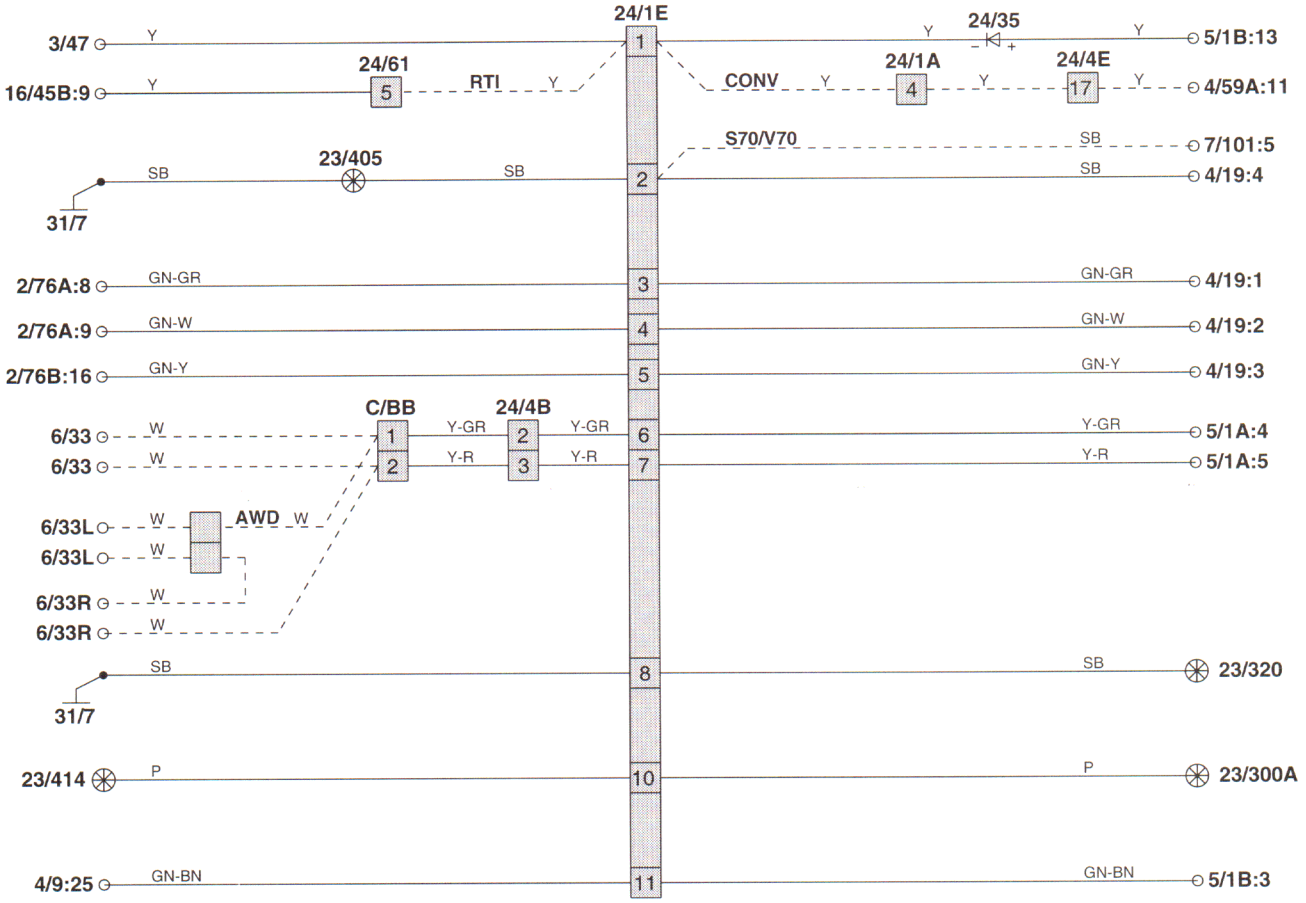

24/2A Green 12-pin (male - female)
Engine compartment cable harness - Firewall cable harness

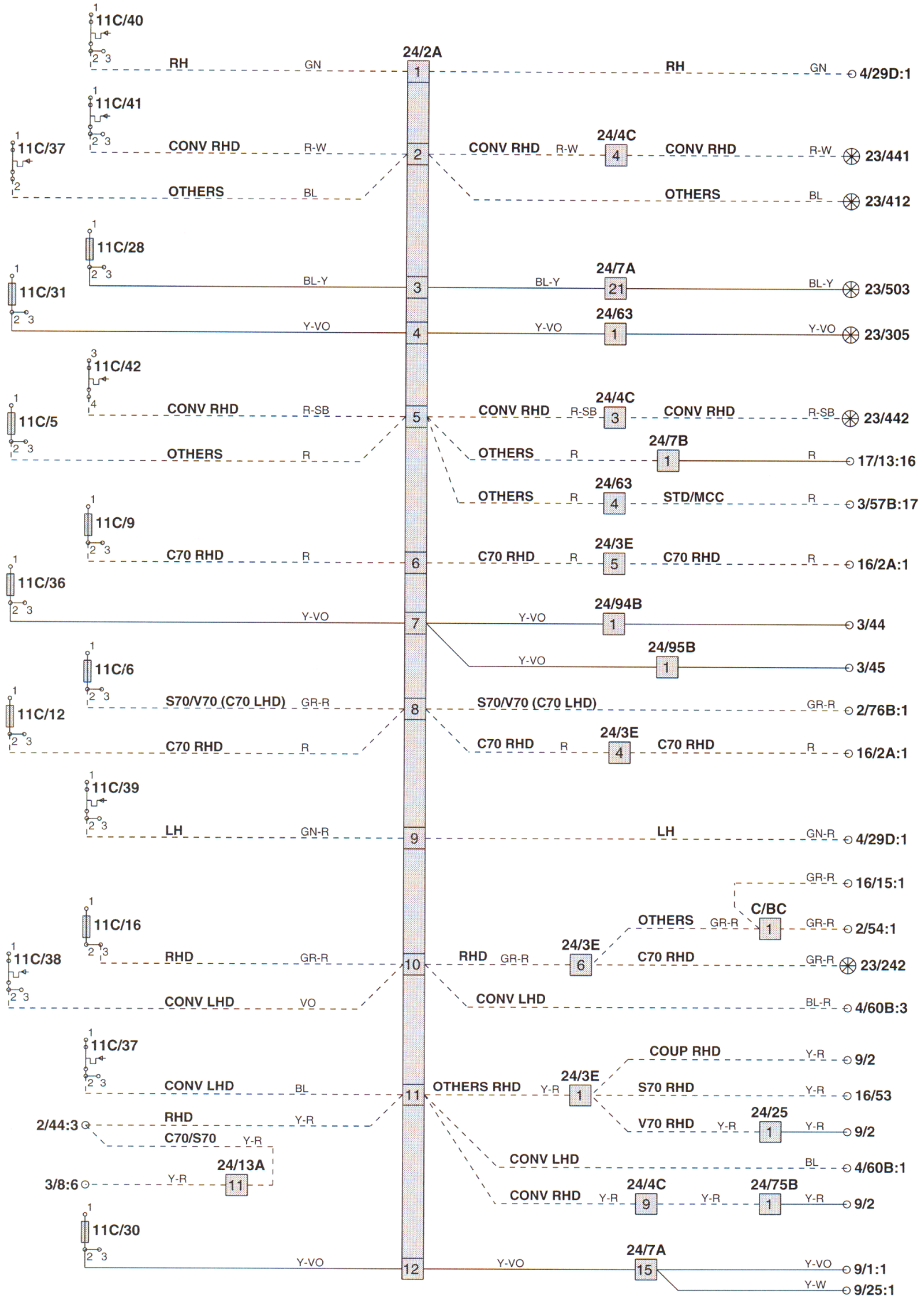

24/2B Light blue 18-pin (male - female)
Engine compartment cable harness - Firewall cable harness

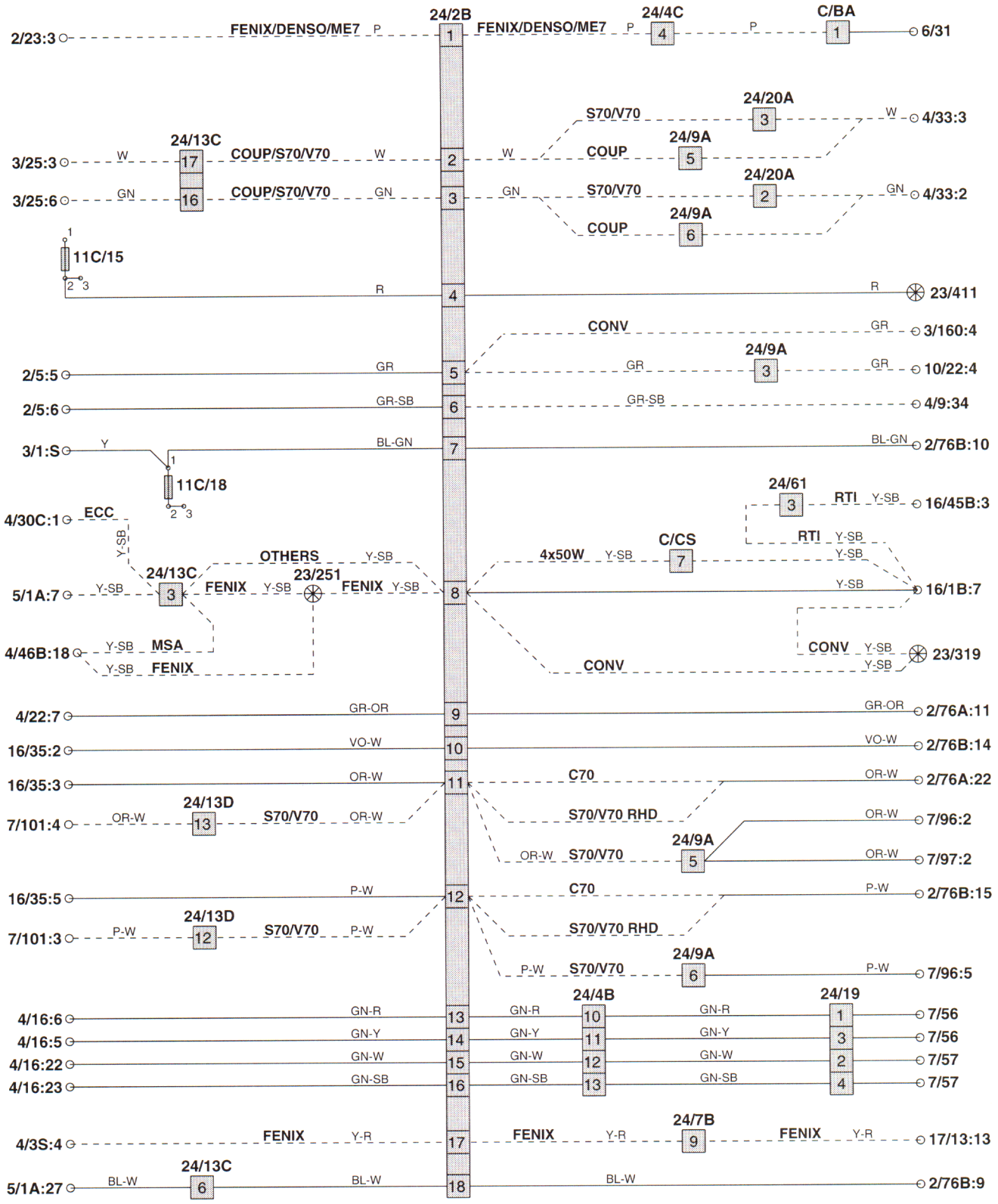

24/2C Yellow 18-pin (male - female)
Engine compartment cable harness - Firewall cable harness

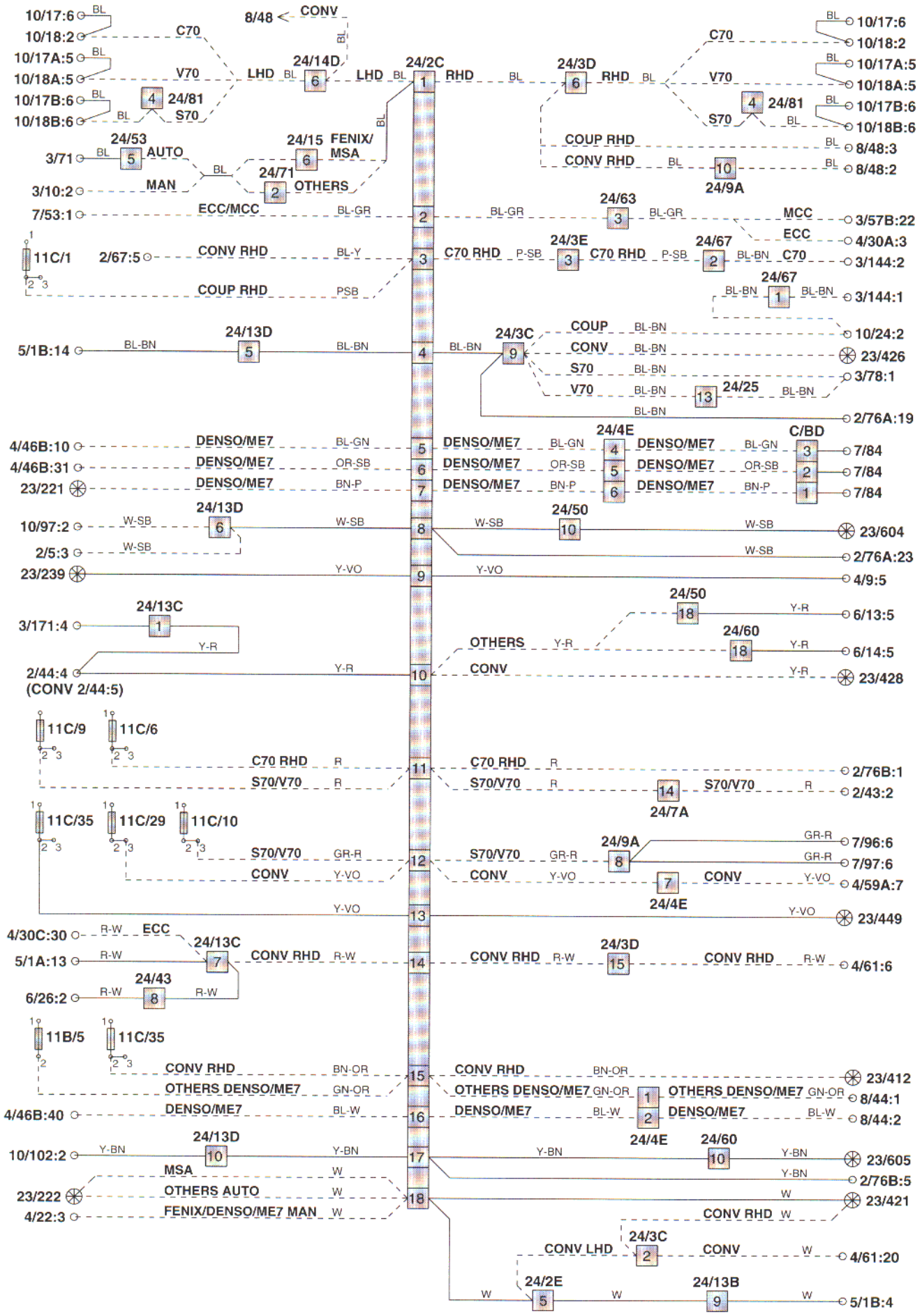

24/2D Red 18-pin (male - female)
Engine compartment cable harness - Firewall cable harness

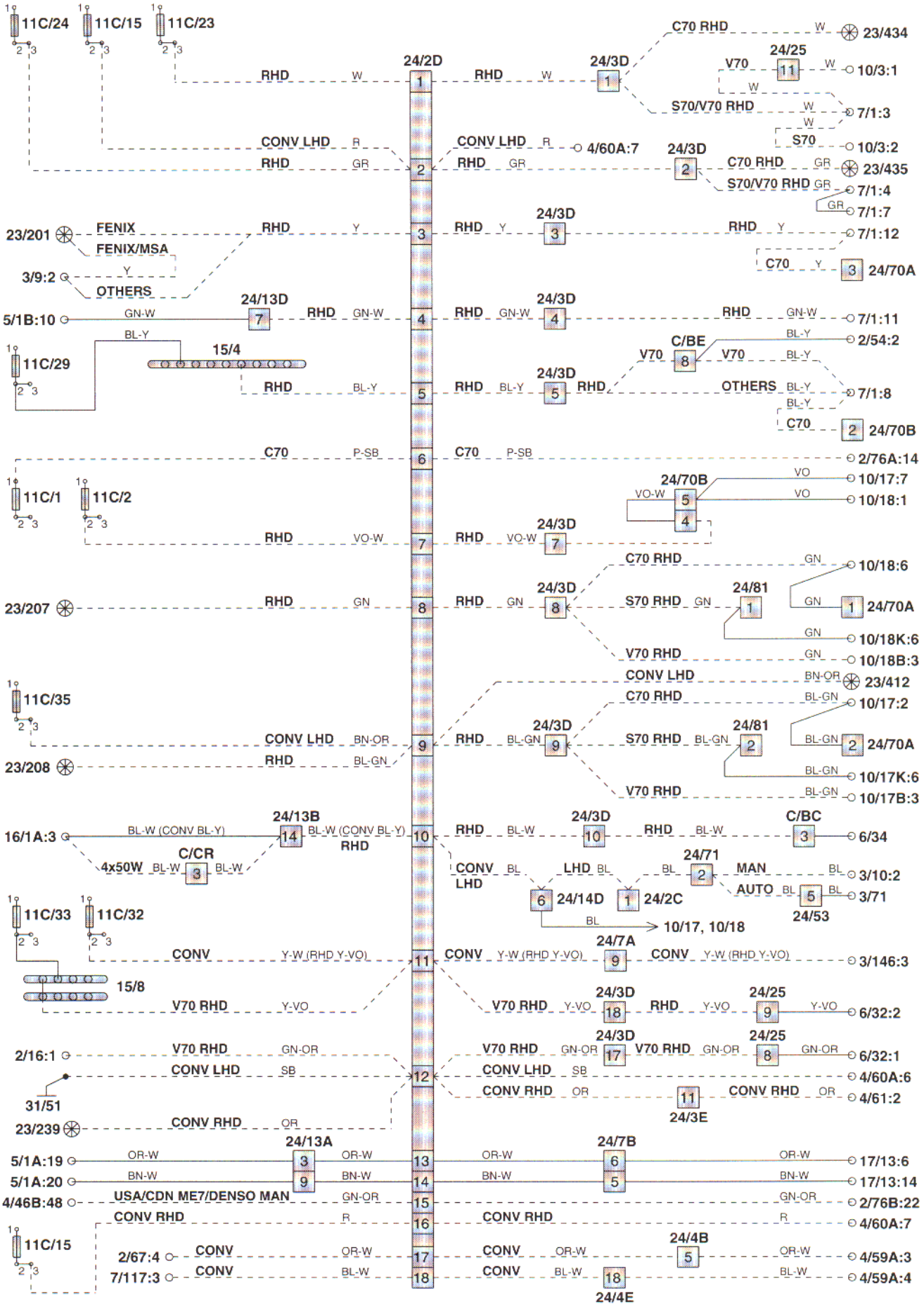

24/2E White 18-pin (male - female)
Engine compartment cable harness - Firewall cable harness

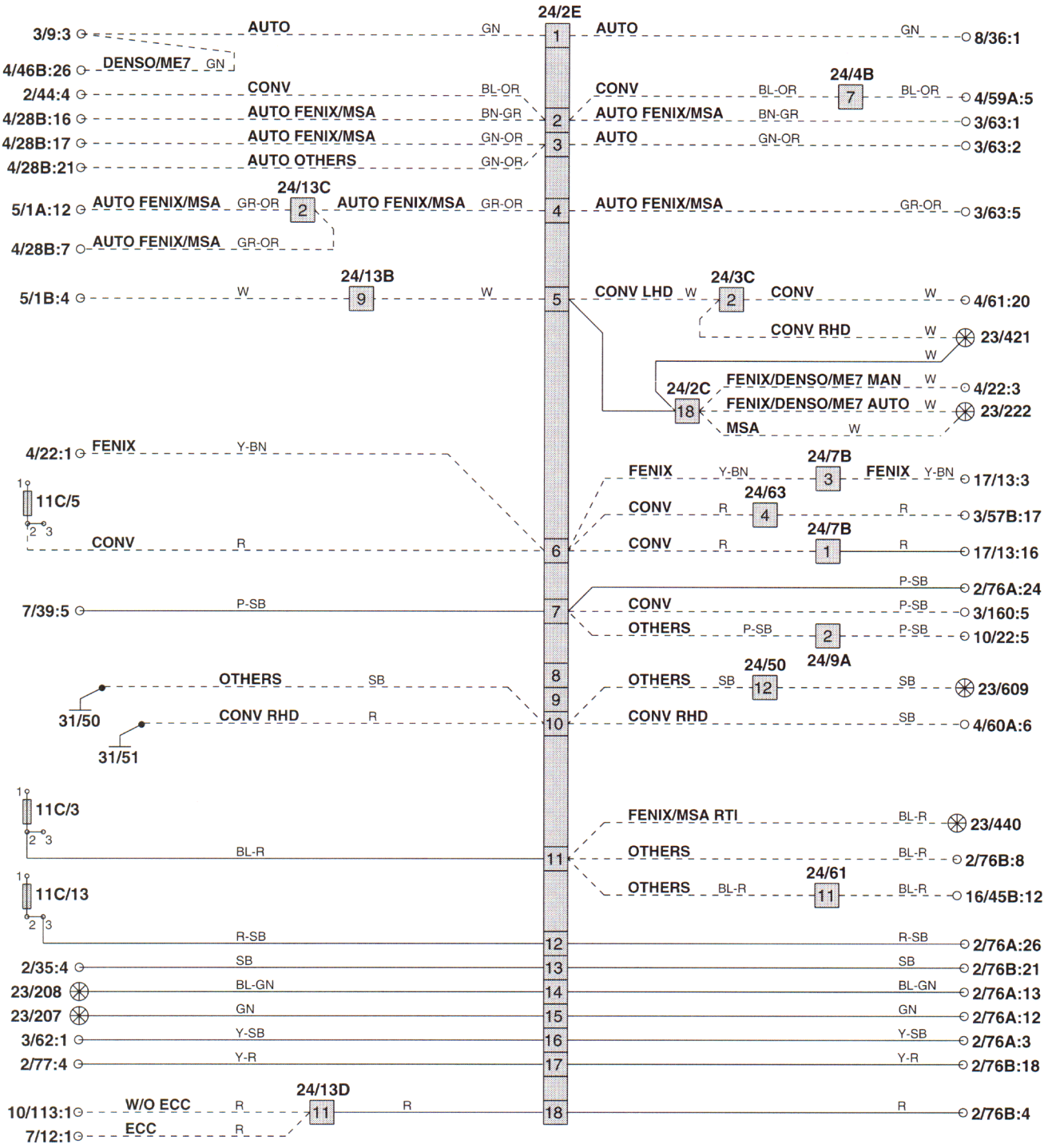

24/3B Light blue 12-pin (male - female)
Firewall cable harness - Left door sill cable harness

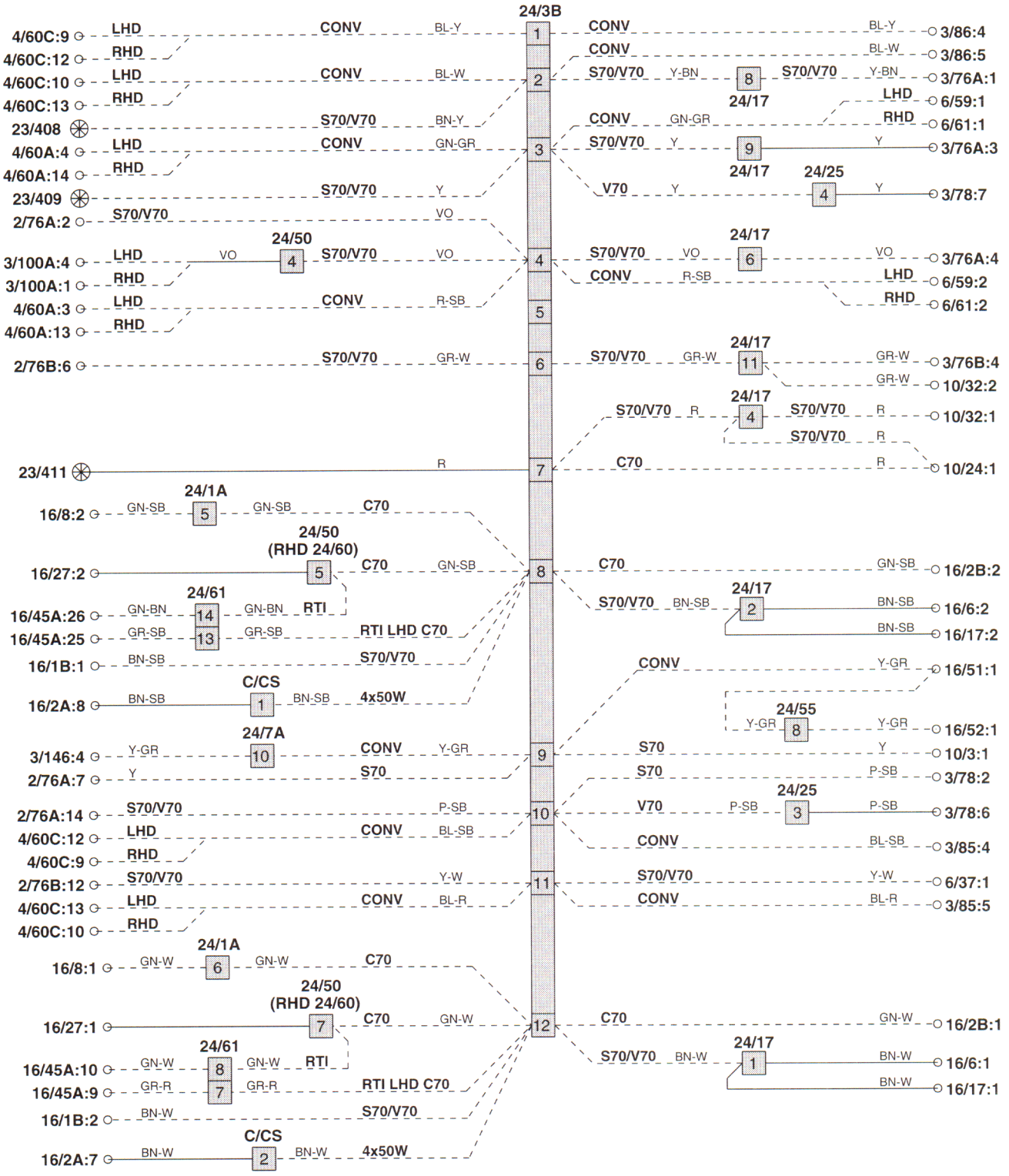

24/3C Yellow 12-pin (male - female)
Firewall cable harness - Left door sill cable harness

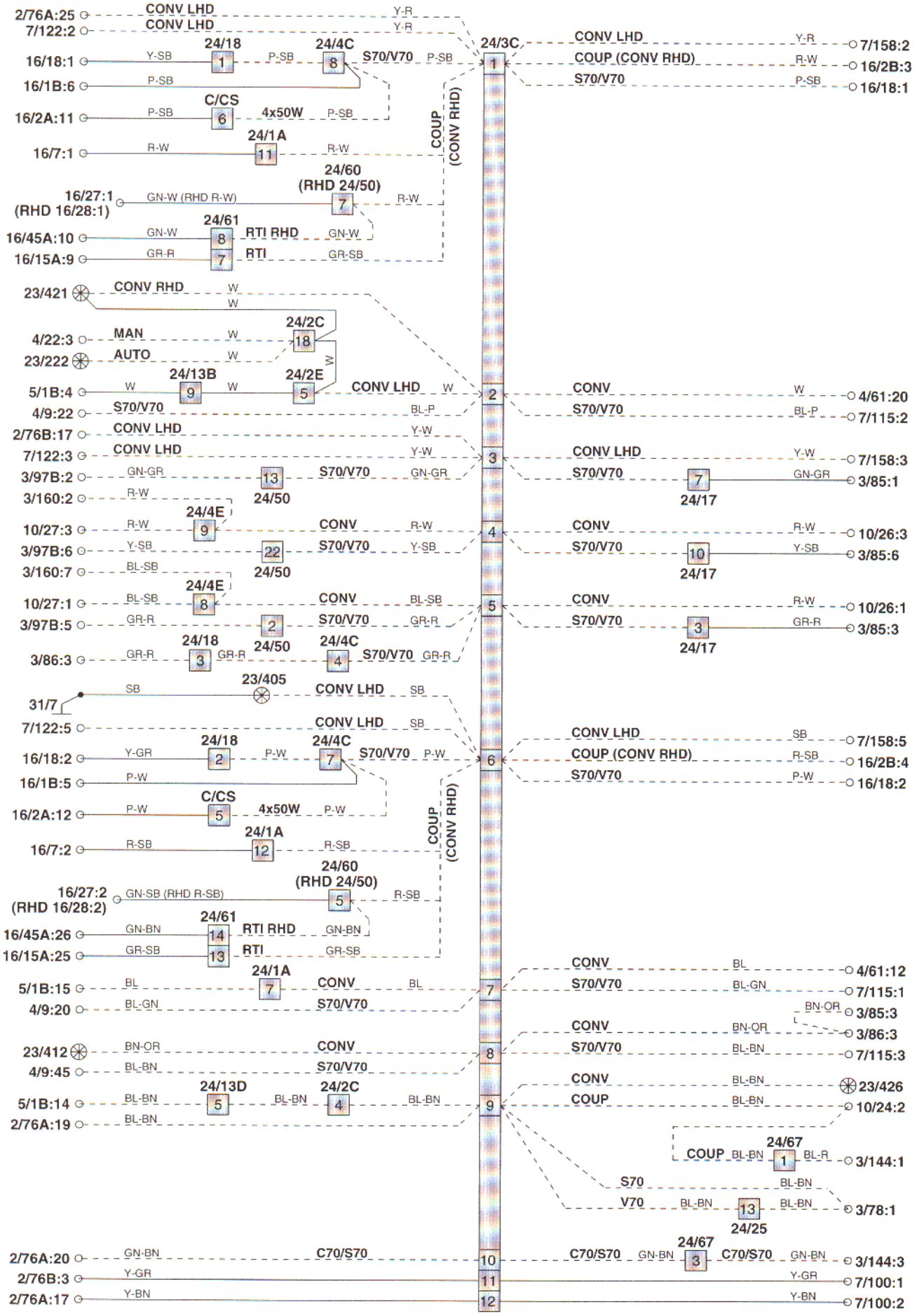

24/3D Red 18-pin (male - female)
Firewall cable harness - Left door sill cable harness

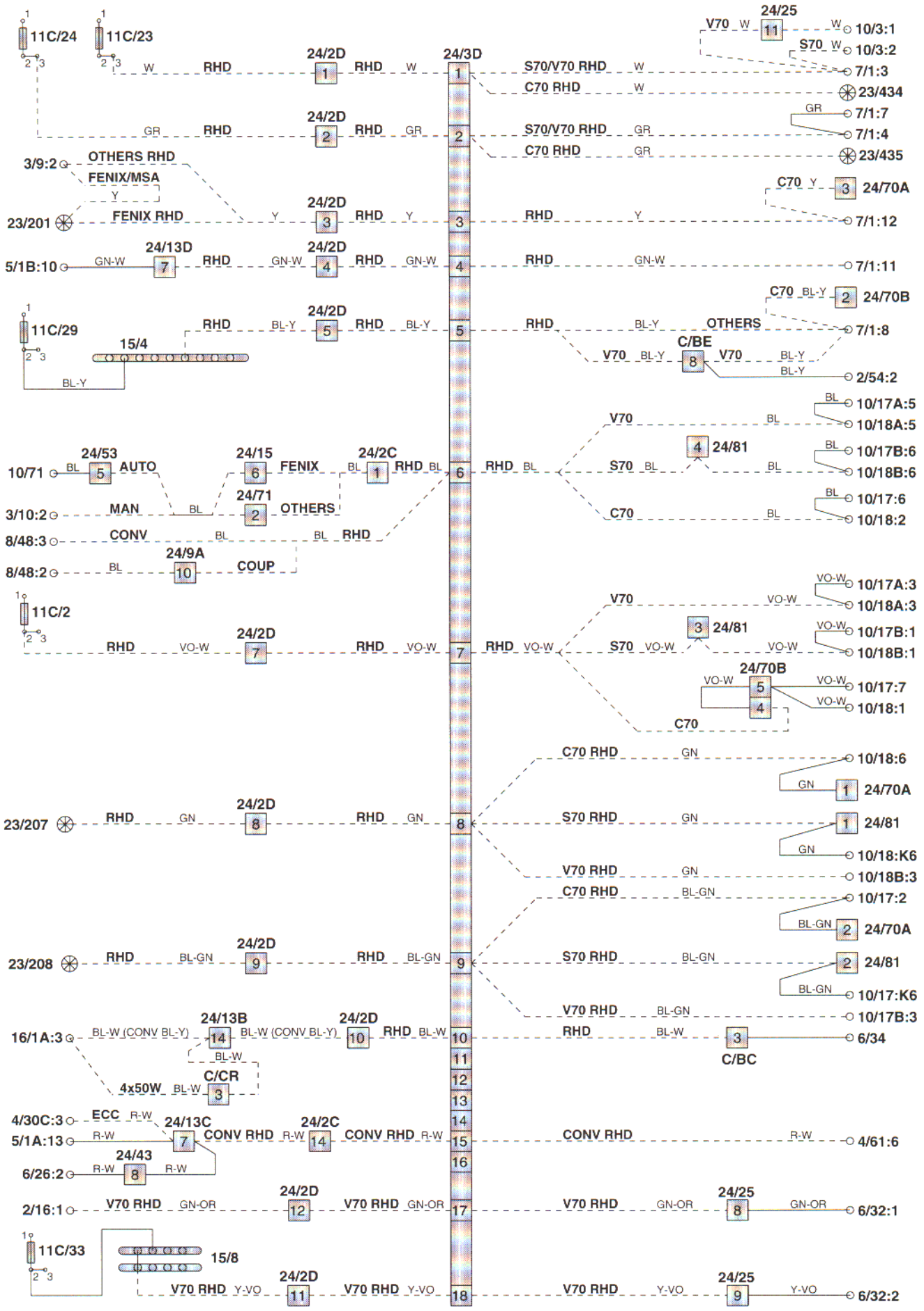

Connector 24/3

24/3E White 12-pin (male - female)
Firewall cable harness - Left door sill cable harness

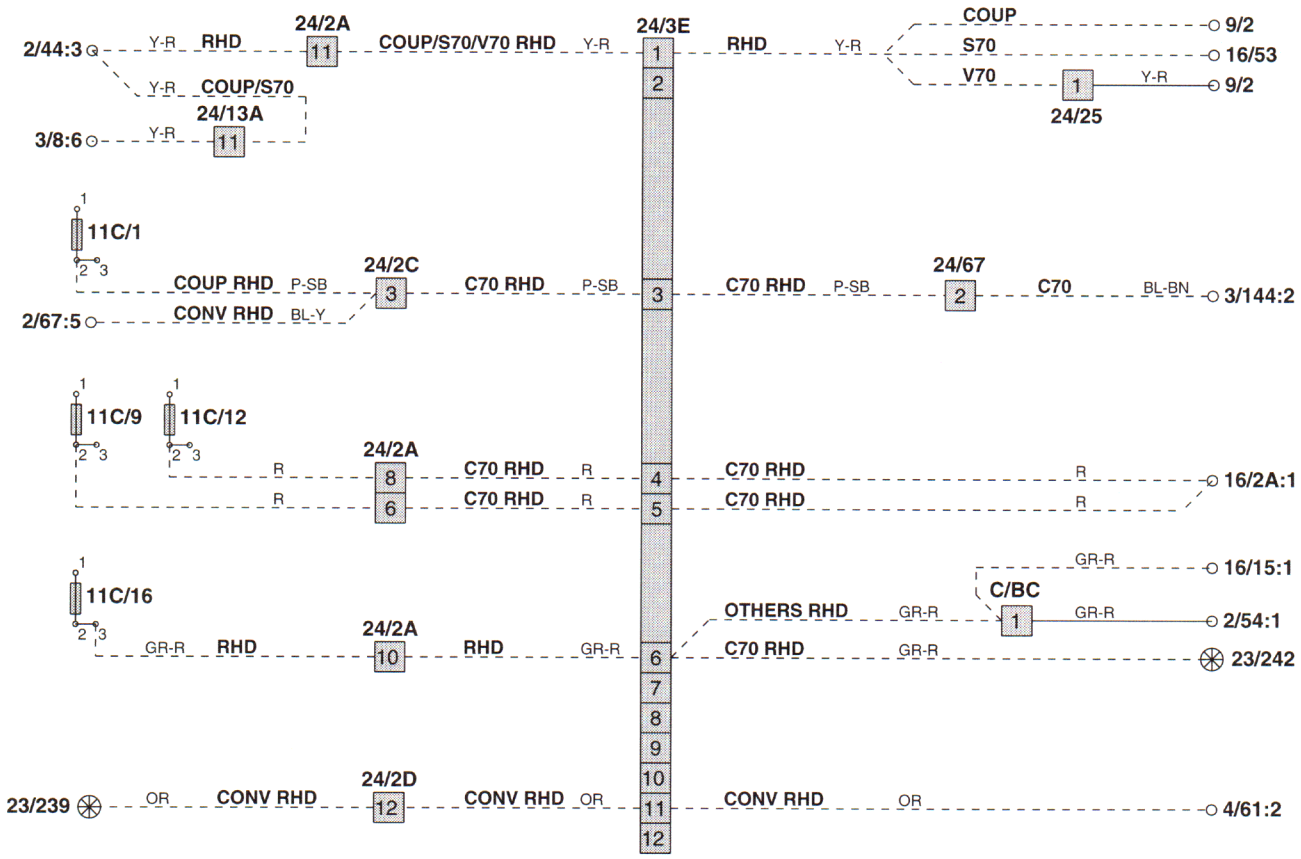

24/4B Light blue 18-pin (male - female)
Firewall cable harness - Right door sill cable harness

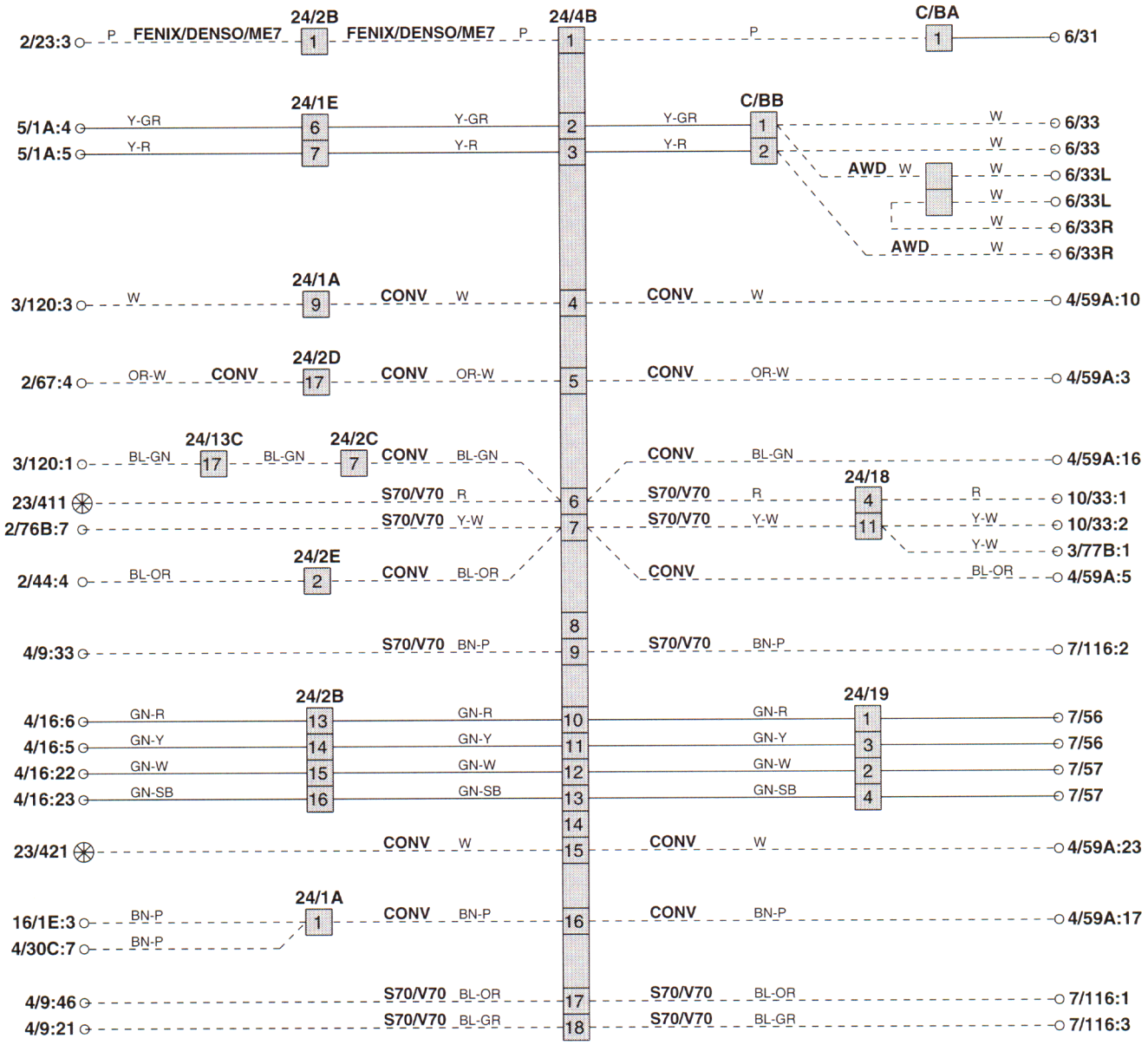

Connector 24/4

24/4C Yellow 12-pin (male - female)
Firewall cable harness - Right door sill cable harness

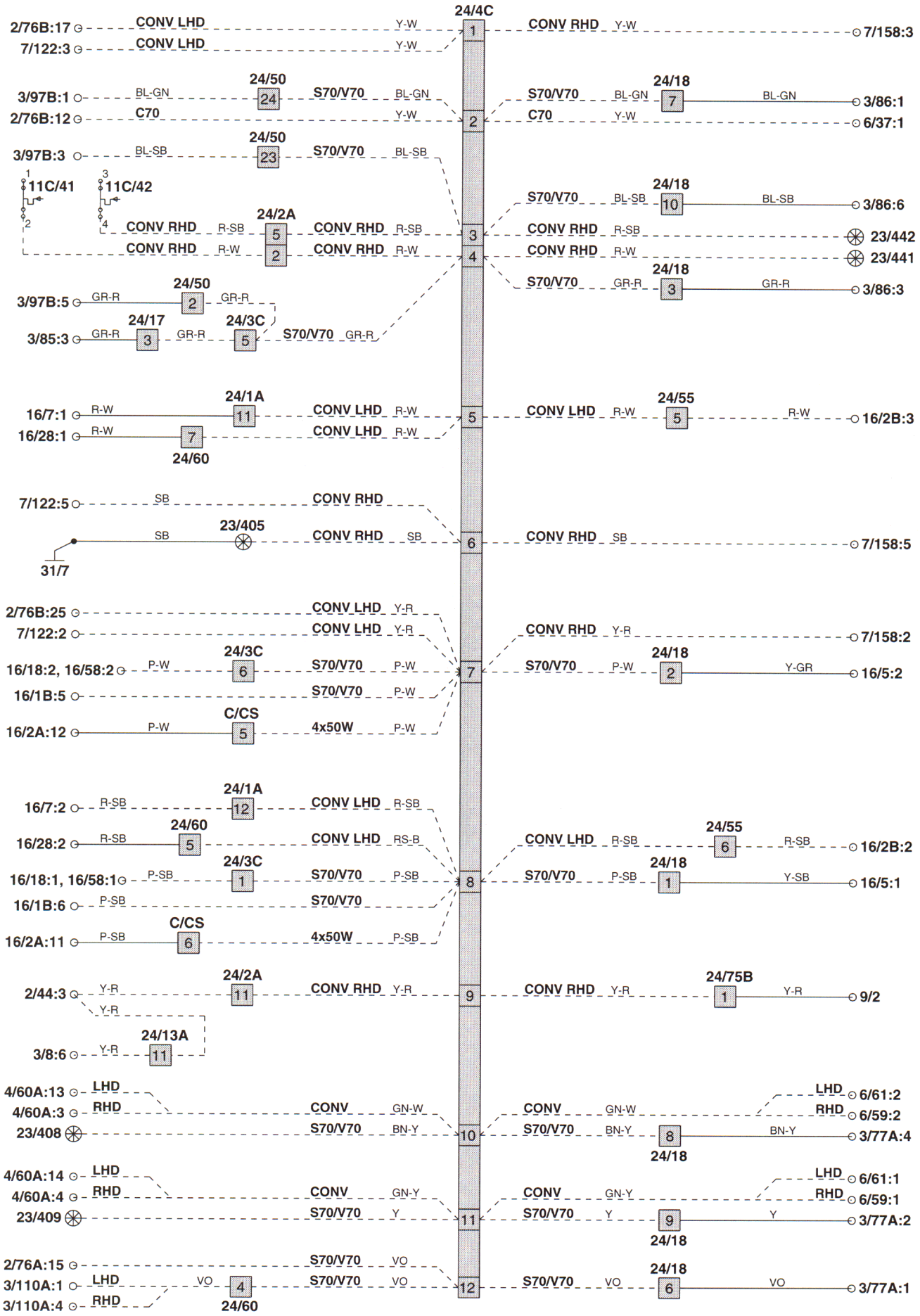

24/4E White 18-pin (female - male)
Right door sill cable harness - Firewall cable harness

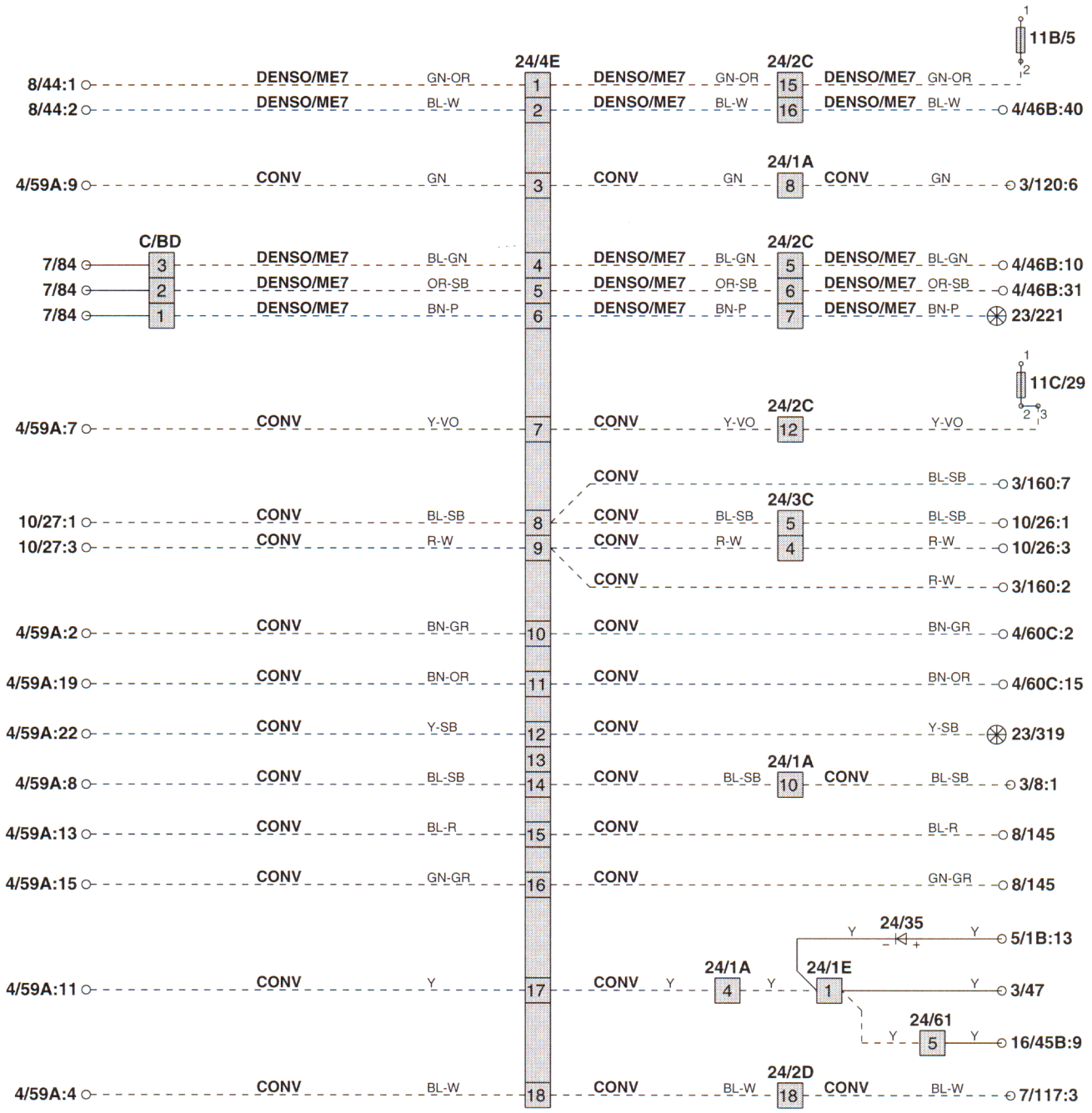

24/7A Green 24-pin (male - female)
Firewall cable harness - Tunnel cable harness

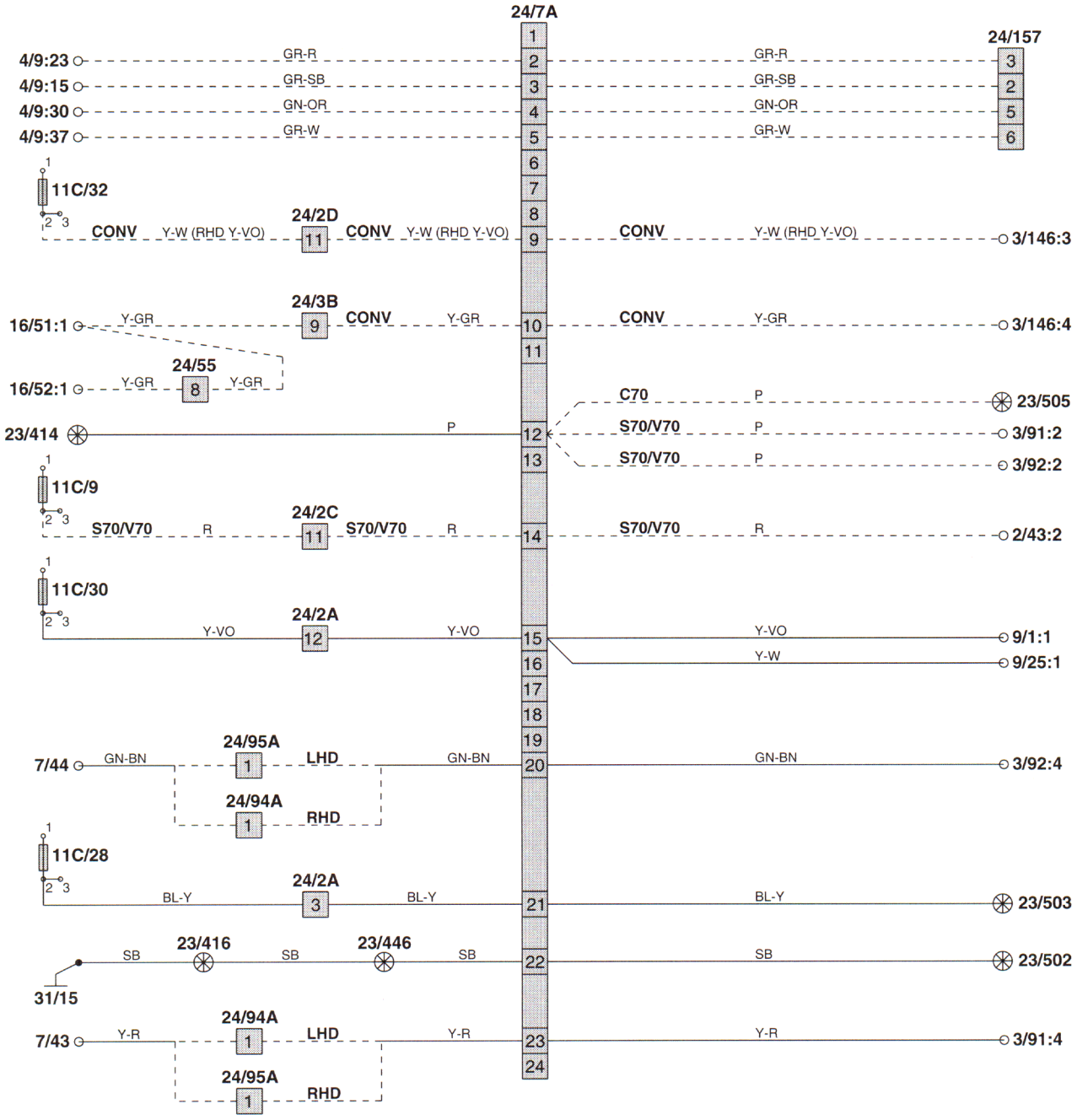

24/7B Natural 10-pin (male - female)
Firewall cable harness - Tunnel cable harness

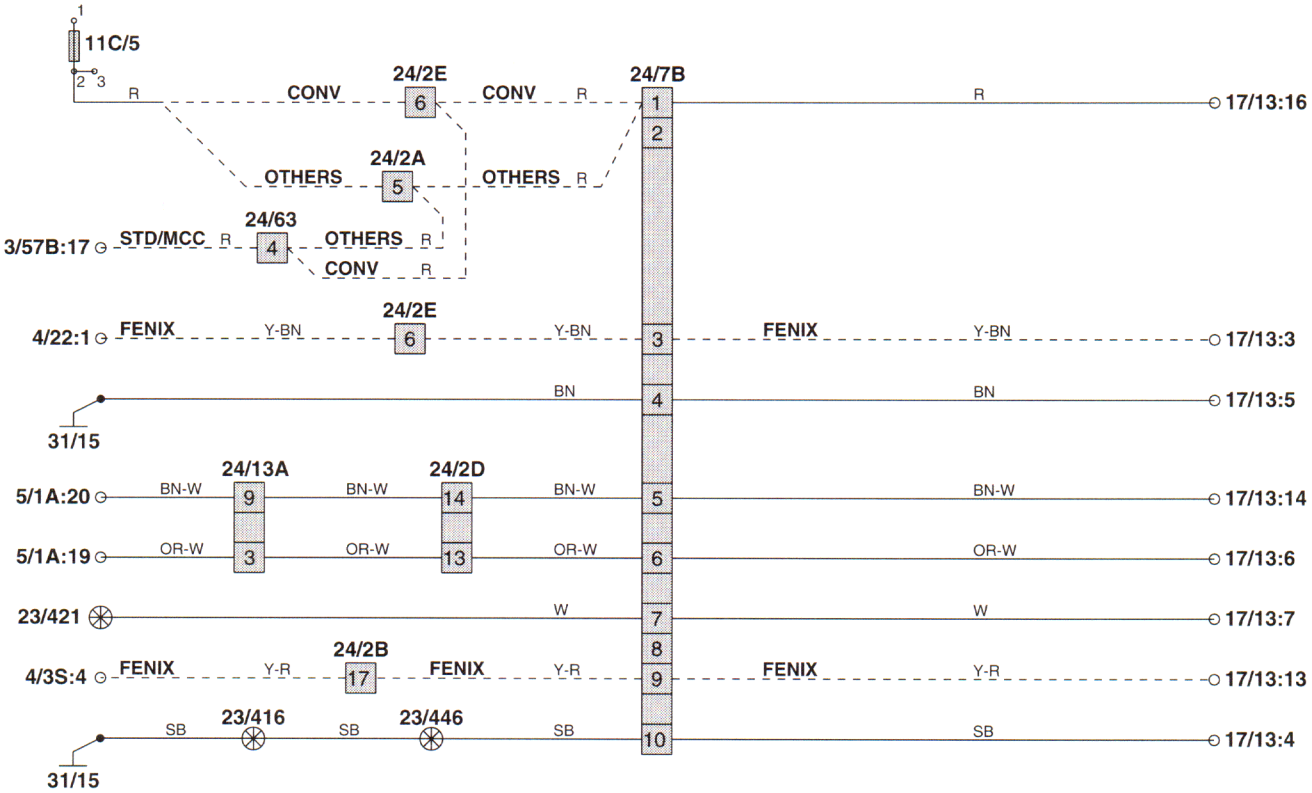

Connector 24/9

24/9A Green 12-pin (male - female) (COUP/S70/V70) Firewall cable harness - Roof cable harness

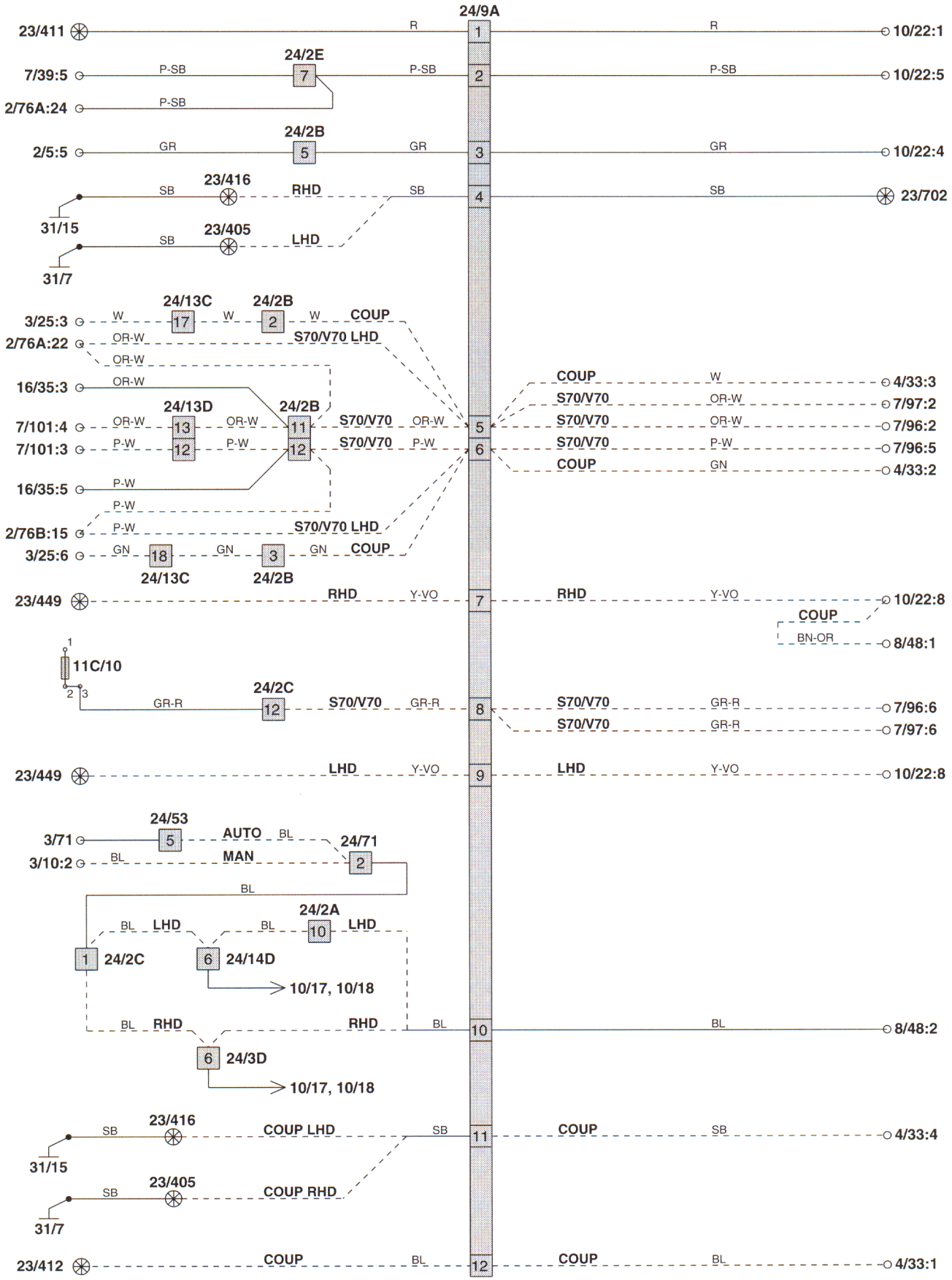

24/13A Green 12-pin (male - female)
Engine compartment cable harness - Instrument panel cable harness

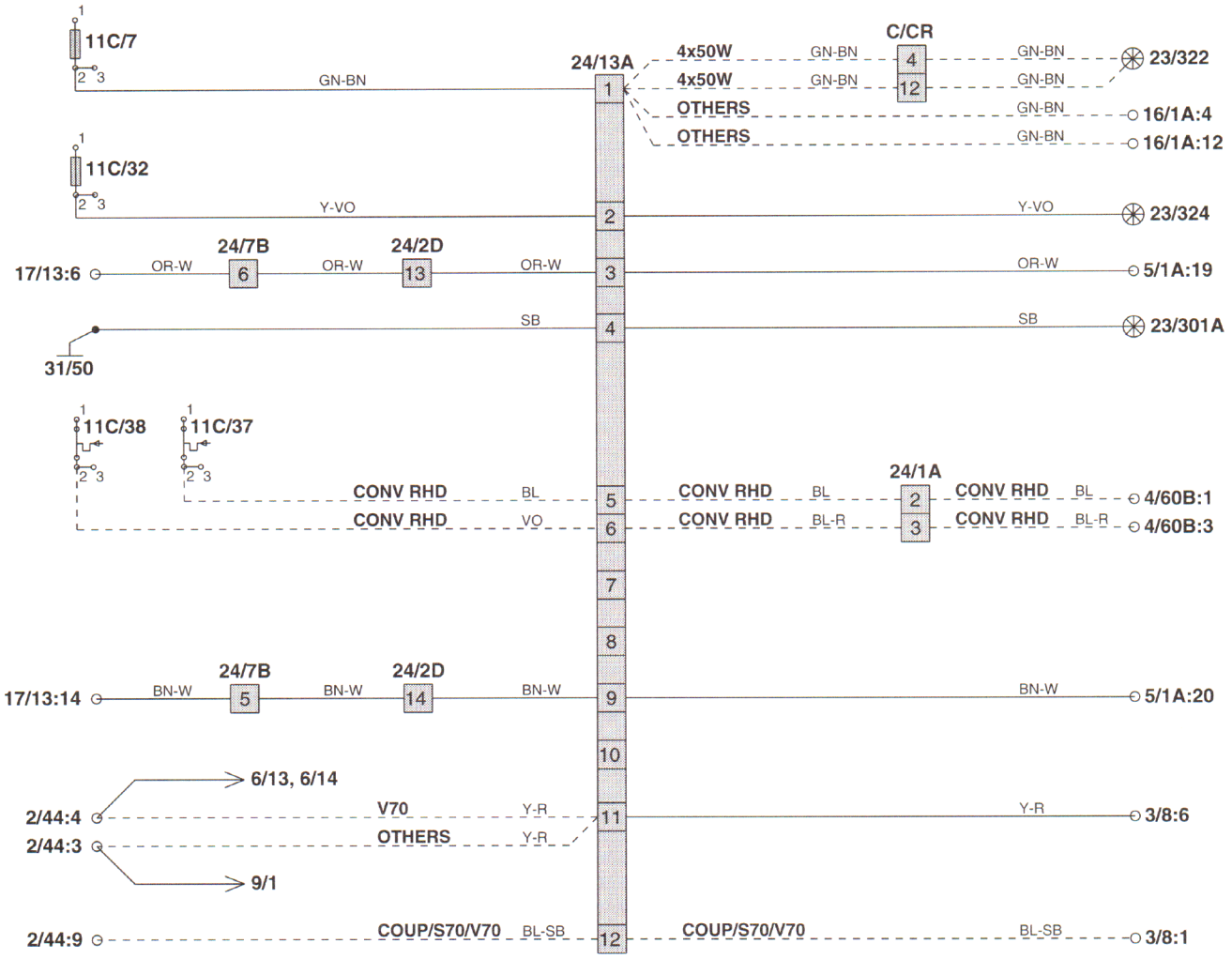

24/13B Light blue 18-pin (male - female)
Engine compartment cable harness - Instrument panel cable harness

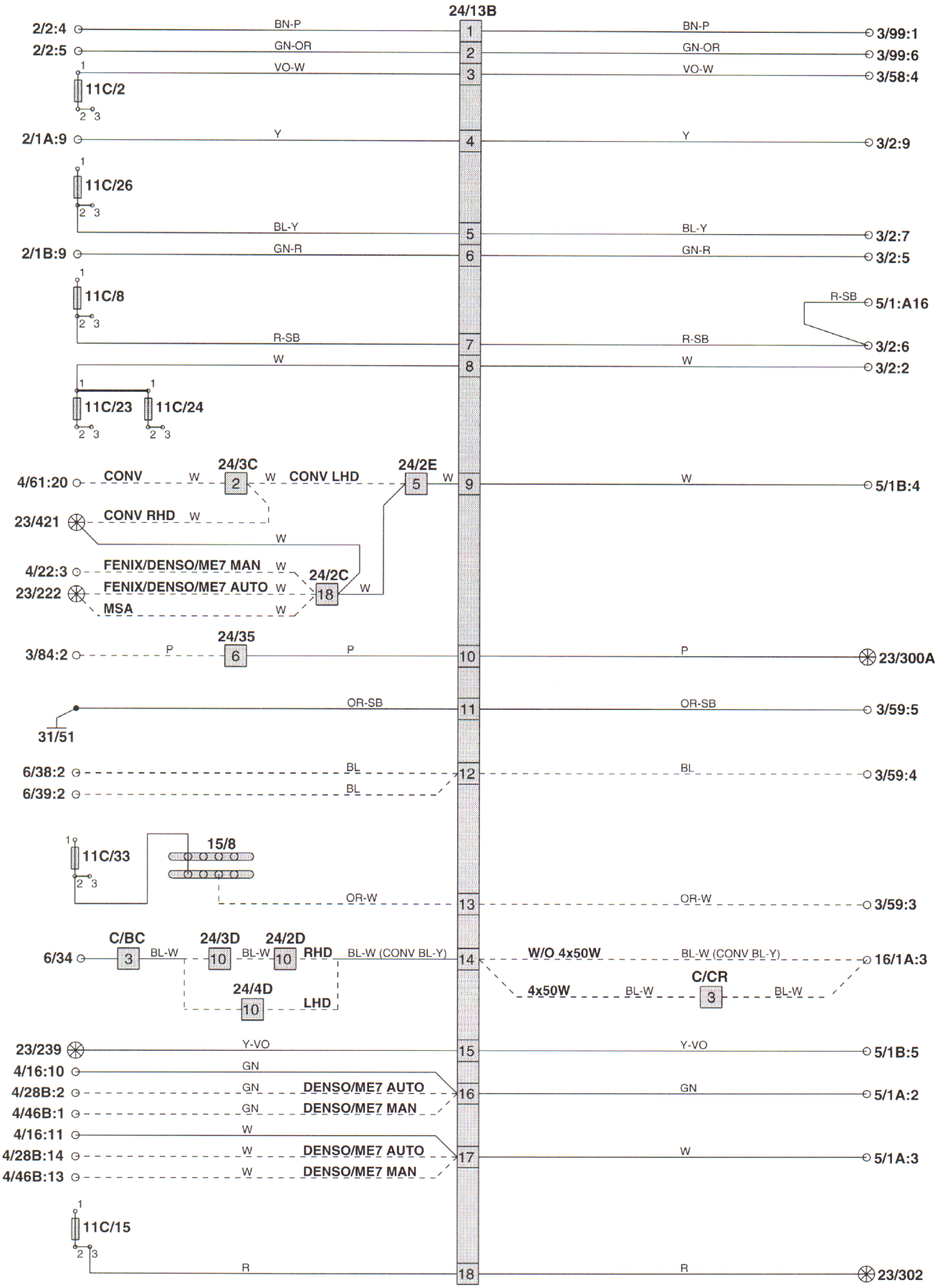

24/13C Yellow 18-pin (male - female)
Engine compartment cable harness - Instrument panel cable harness

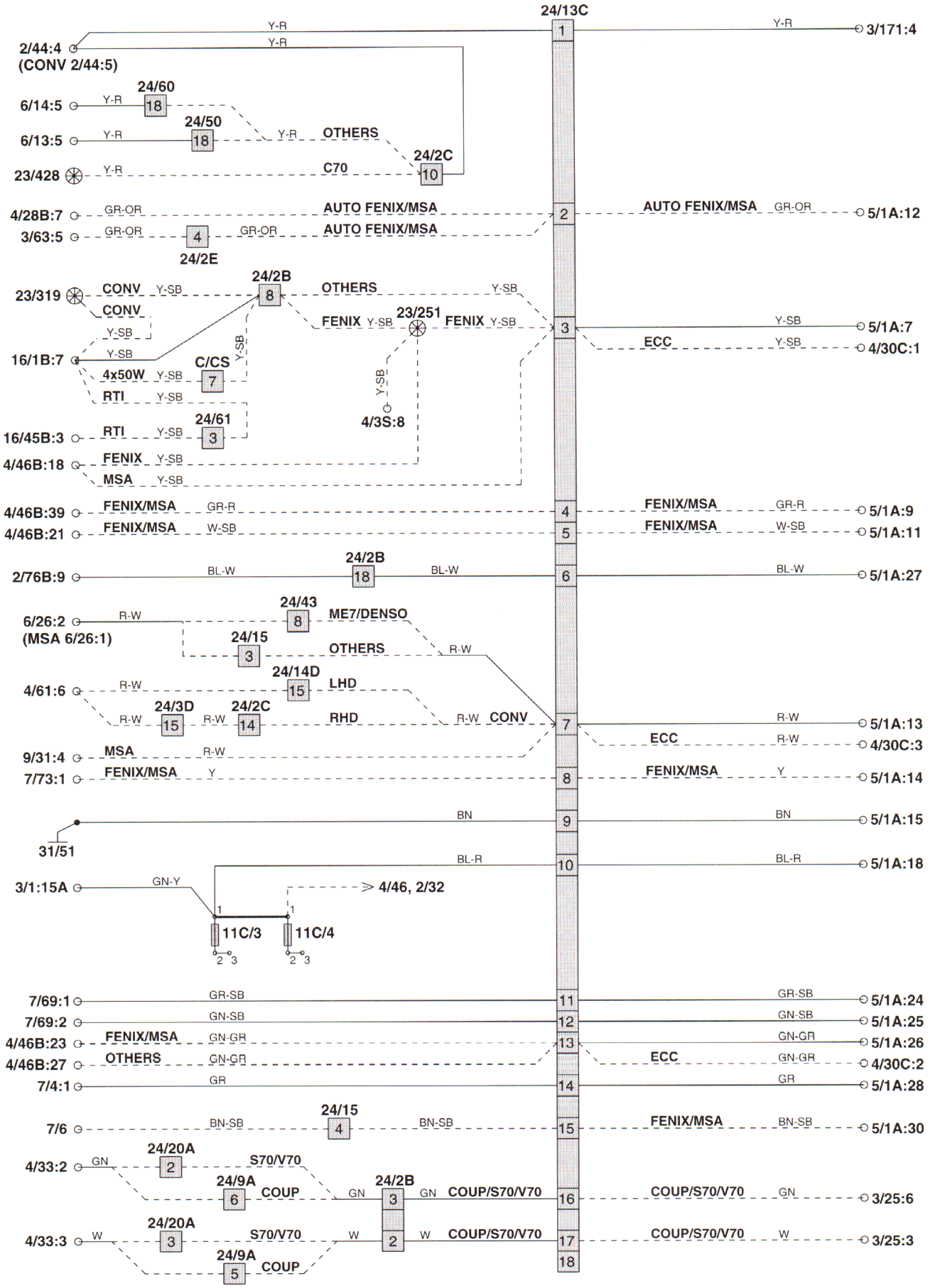

24/13D Red 18-pin (male - female)
Engine compartment cable harness - Instrument panel cable harness

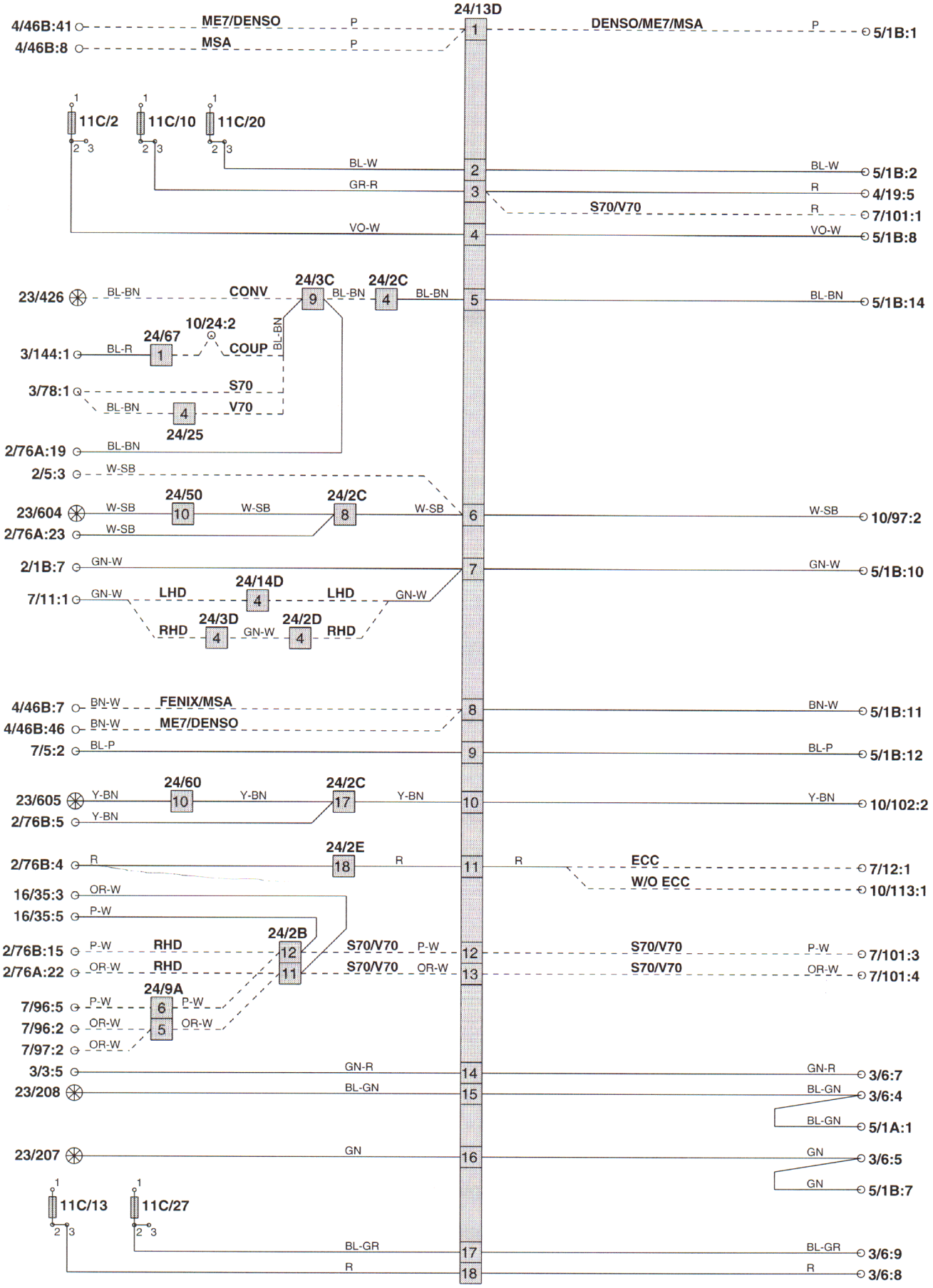

24/14D Red 18-pin (male - female)
Engine compartment cable harness - Left door sill cable harness

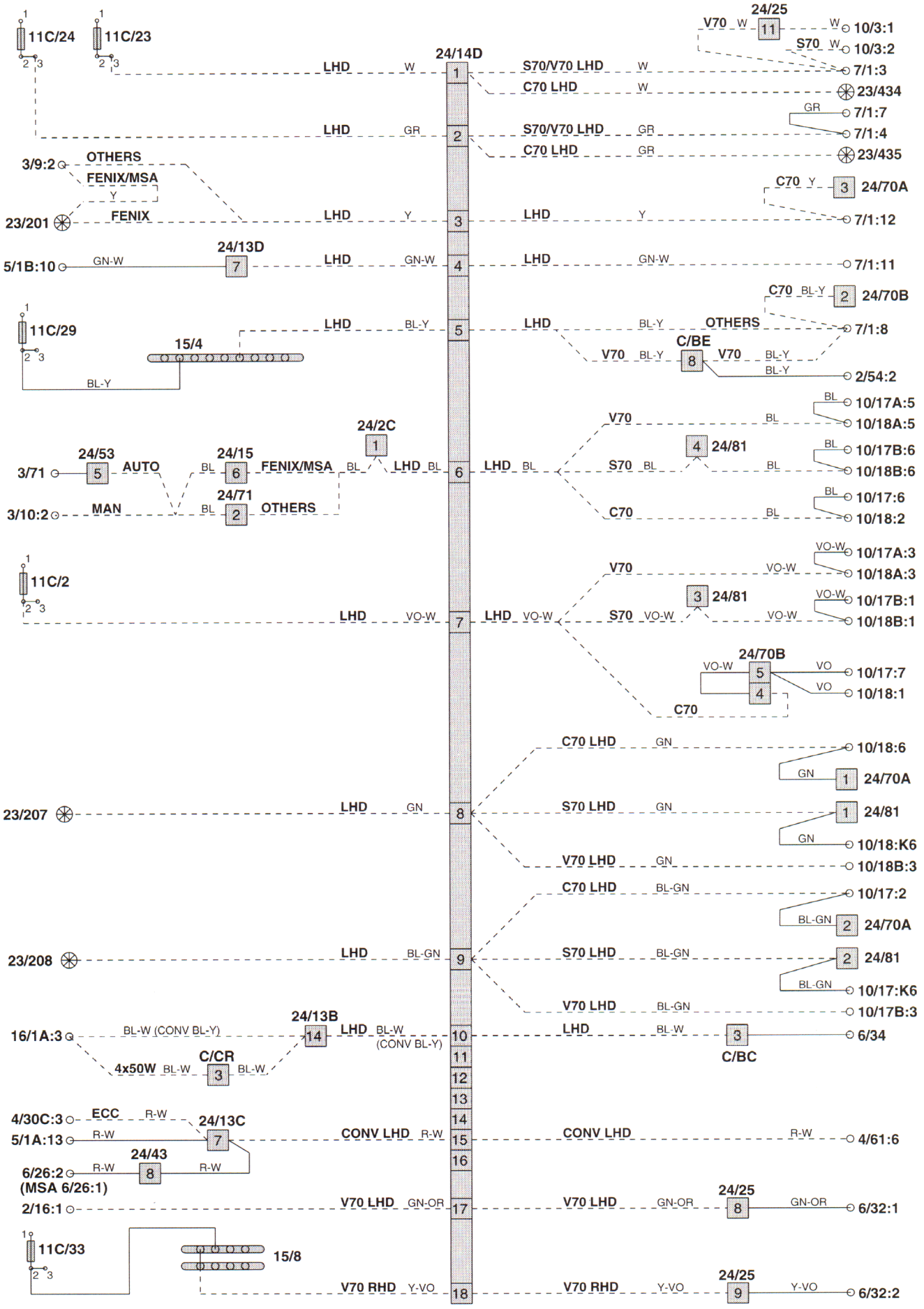

Connector 24/14

24/14E White 12-pin (male - female)
Engine compartment cable harness - Left door sill cable harness

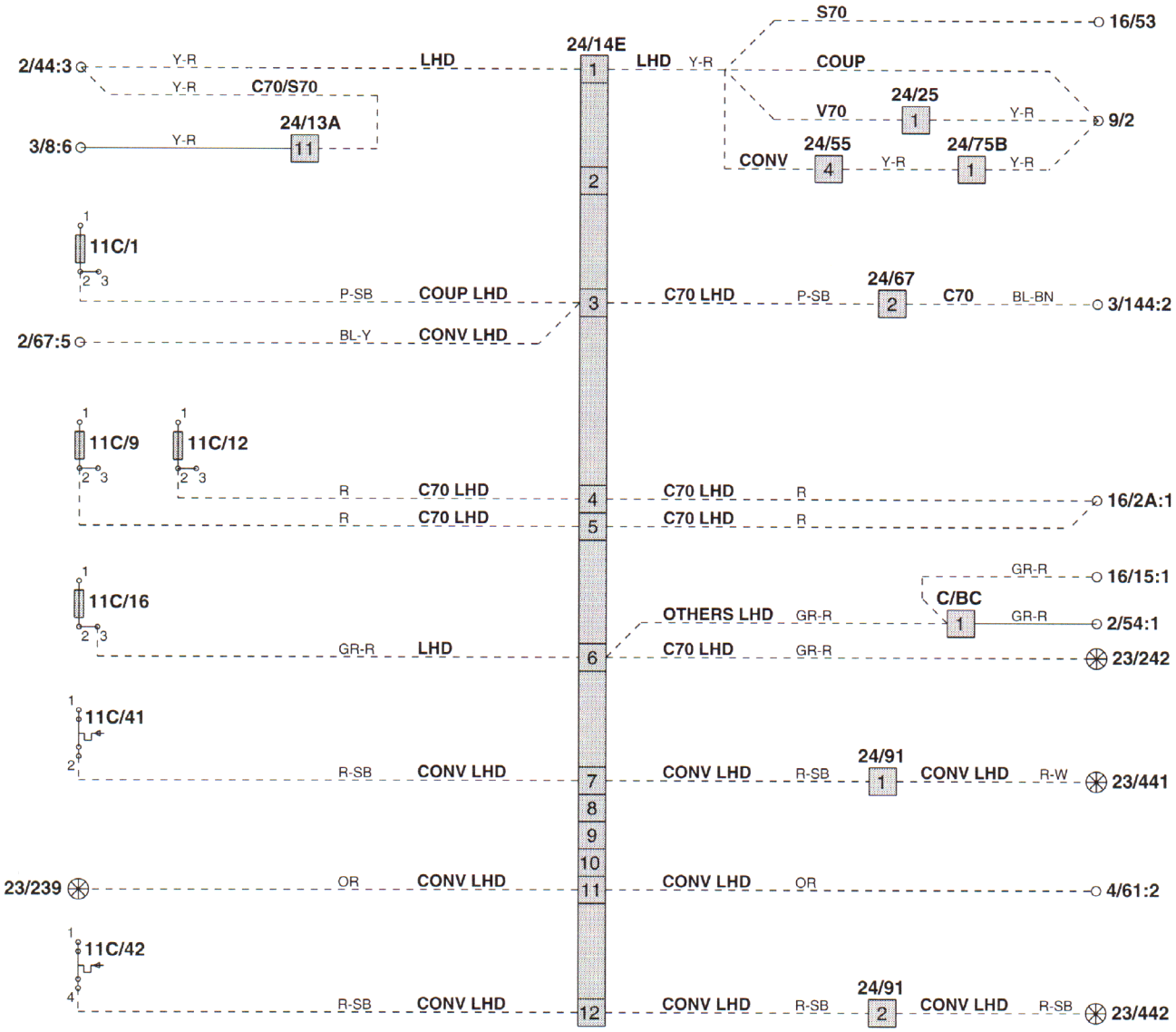

24/15 Light Grey 10-pin (female - male)
Engine compartment cable harness - Engine cable harness

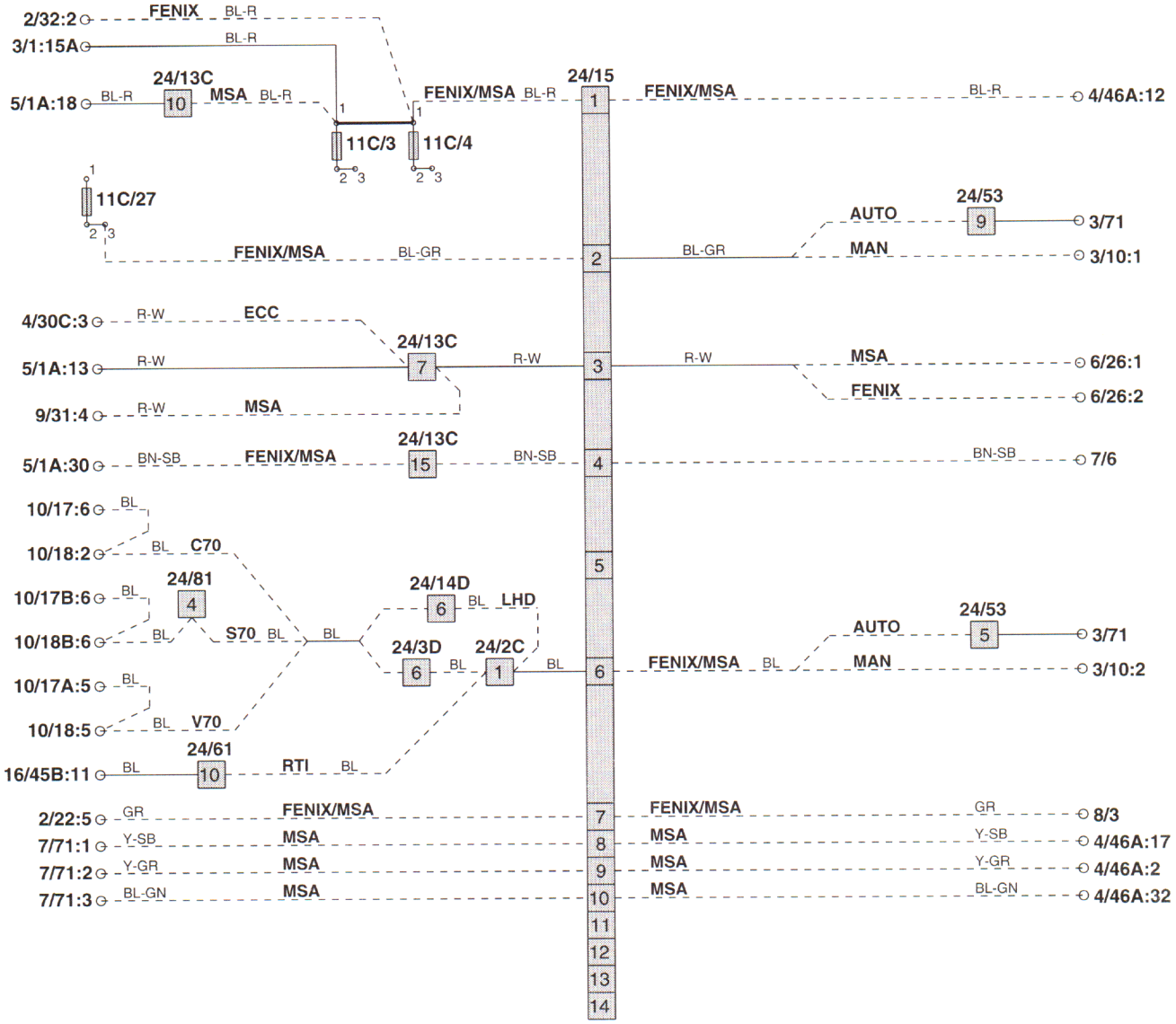

24/17 Natural 11-pin (female - male) (S70/V70)
Left door sill cable harness - Left rear door cable harness

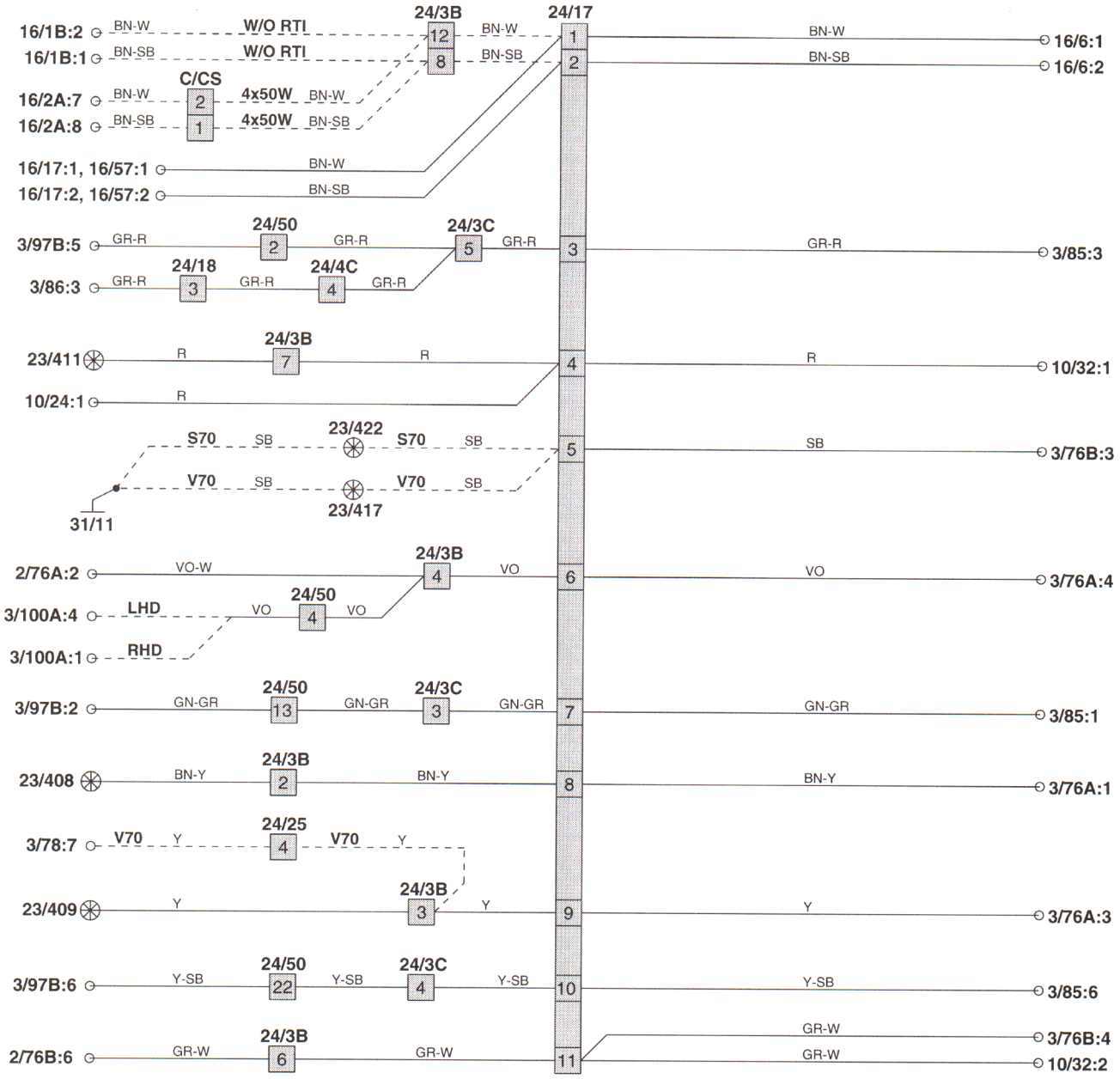

24/18 Natural 11-pin (female - male) (S70/V70)
Right door sill cable harness - Right rear door cable harness

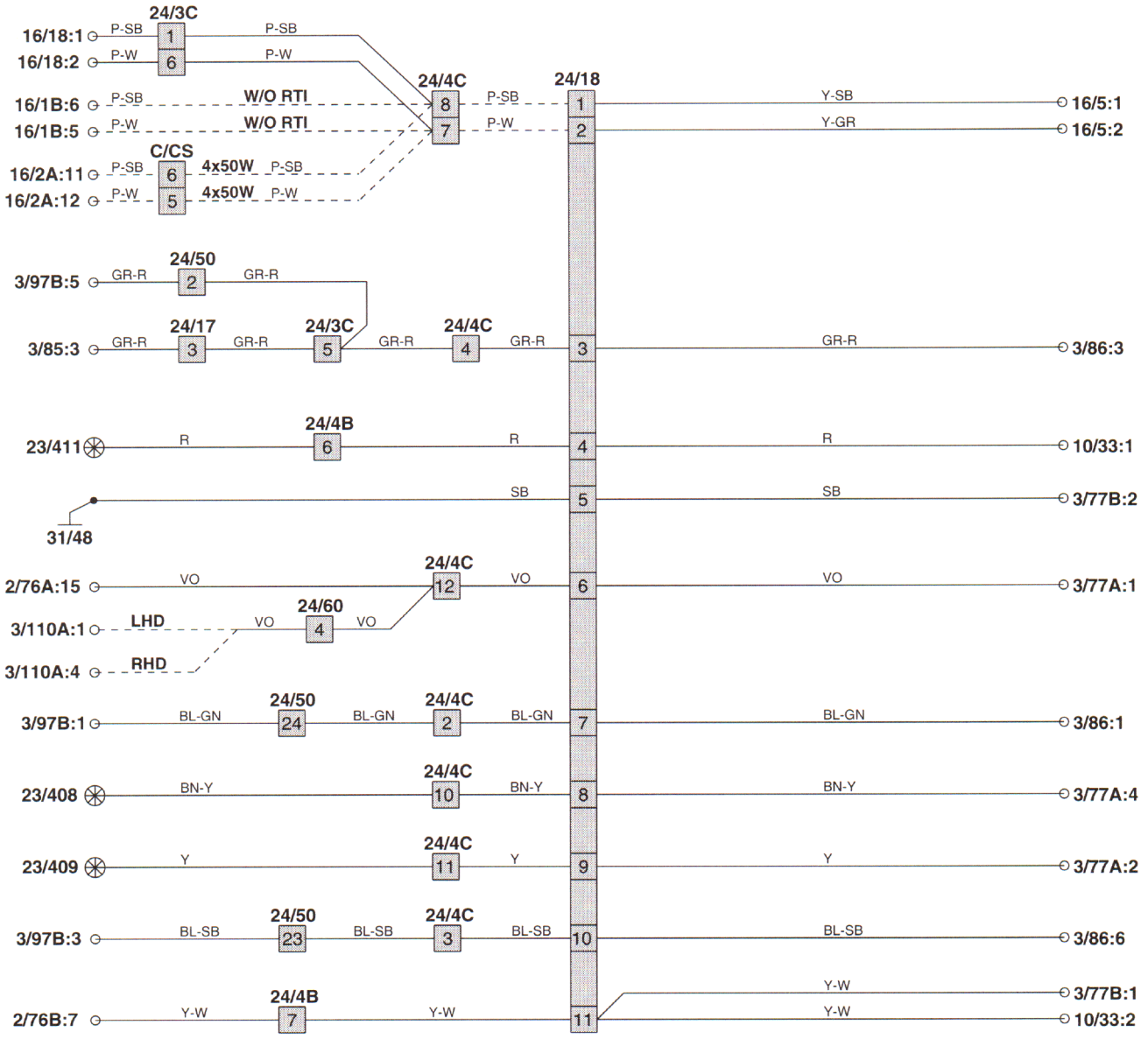

Connectors 24/19 and 24/20

24/19 Yellow 4-pin (female - male)
Right door sill cable harness - Rear wheel sensor cable harness

24/20A Green 12-pin (male - female) (S70/V70)
Firewall cable harness - Power sunroof cable harness

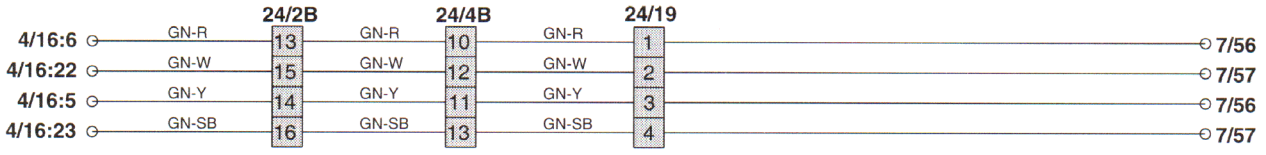

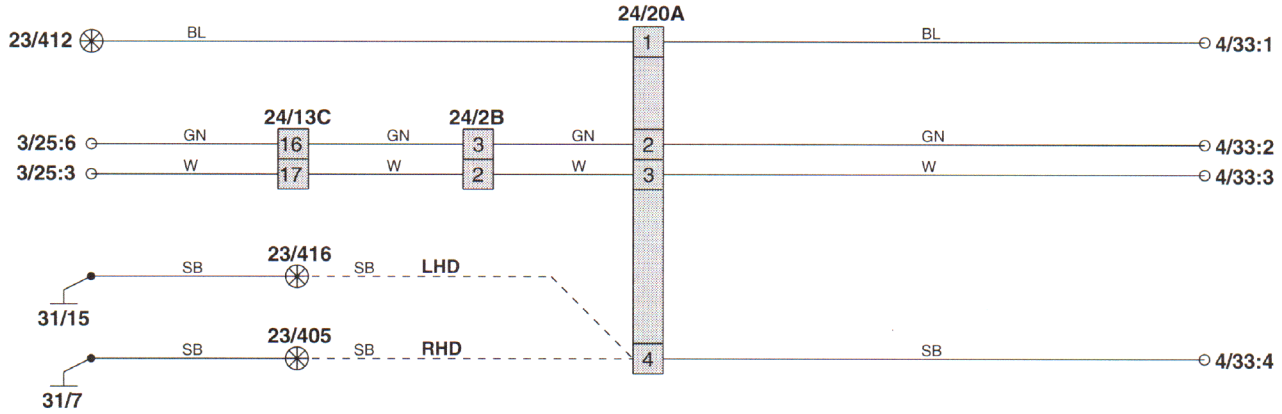

24/25 Natural 11-pin (male - female) (V70)
Left door sill cable harness - Tailgate cable harness

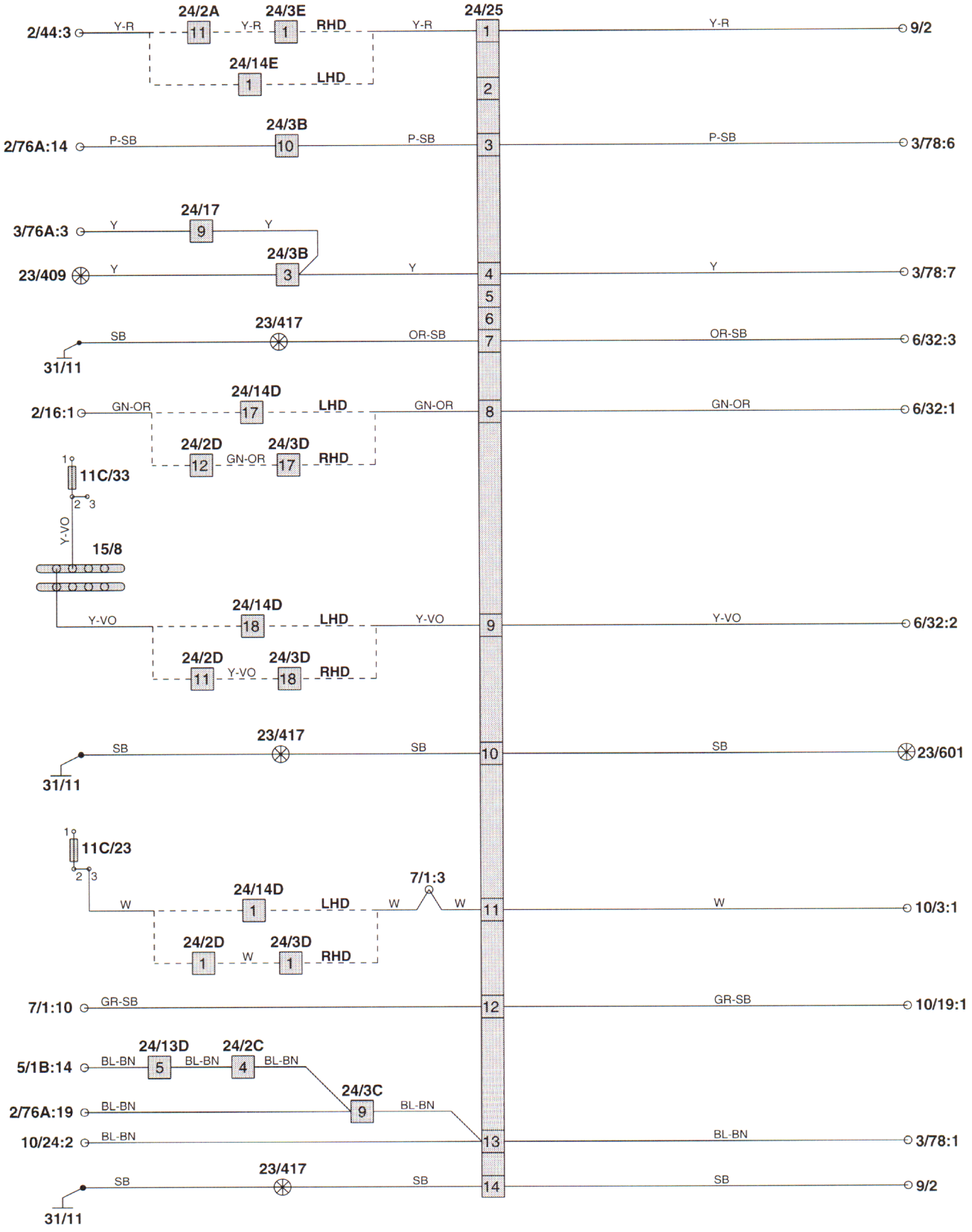

Connectors 24/43 and 24/44

24/43 Black 8-pin (female - male)
Engine compartment cable harness - Engine cable harness

24/44 Gray 2-pin (female - male)
Engine compartment cable harness - Engine cable harness

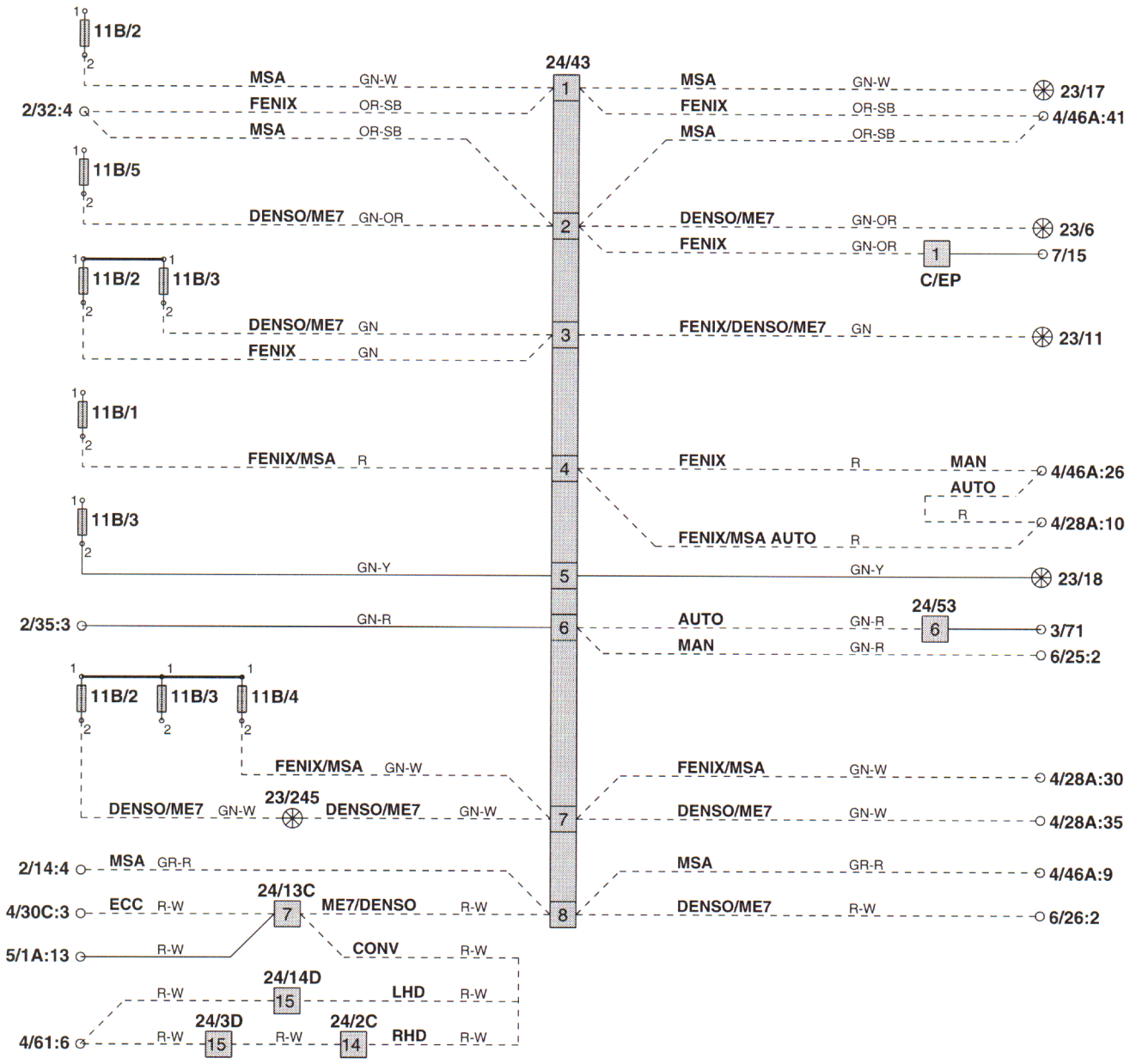

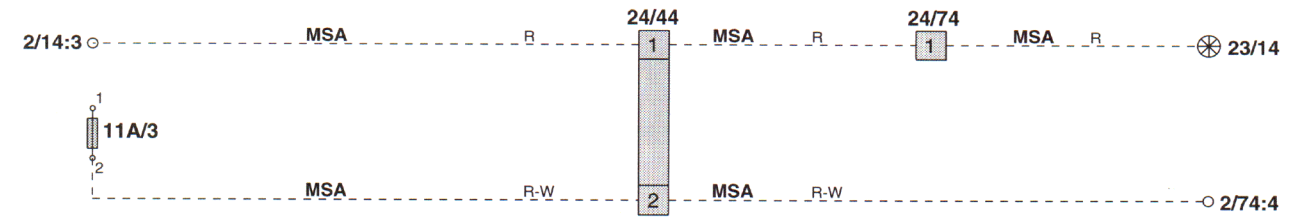

24/50 Black 24-pin (male - female)
Firewall cable harness - Driver's door cable harness

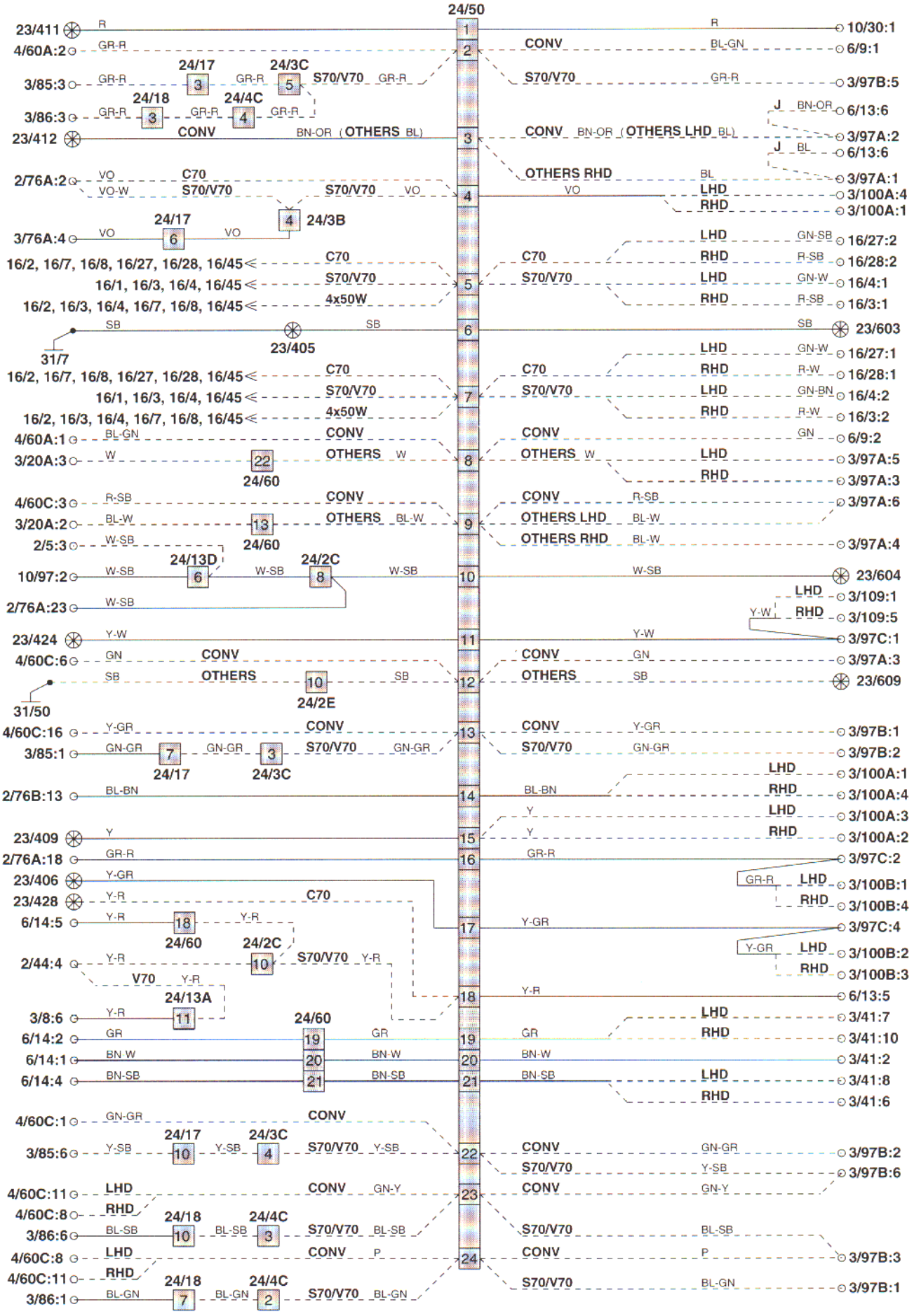

Connector 24/53

24/53 Black 26-pin (female - male)
Engine cable harness - AW 50-42

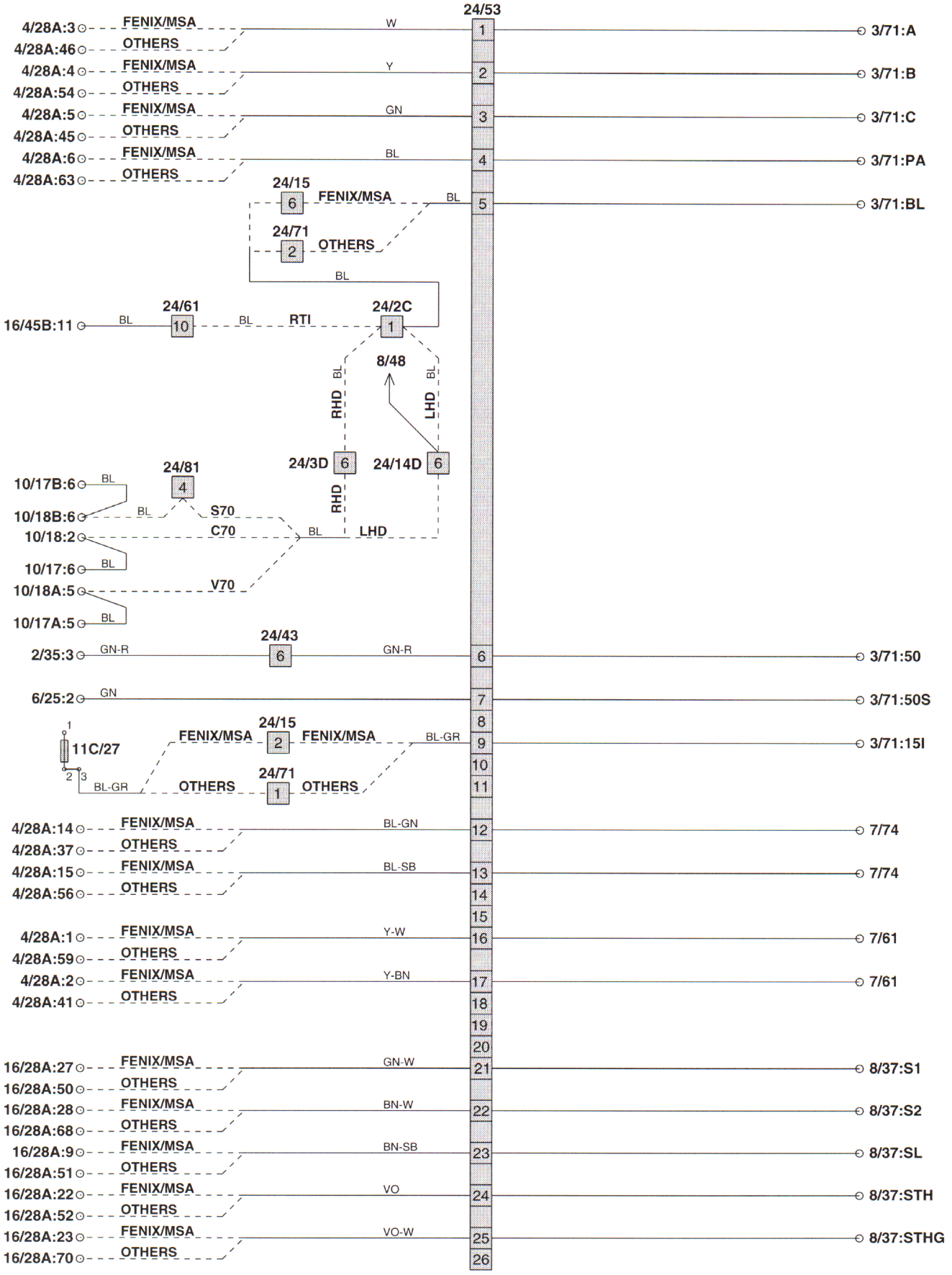

24/55 White 11-pin (female - male) (CONV)
Left door sill cable harness - Right door sill cable harness

24/59 Natural 16-pin (male - female)
Cable harness RTI - Display RTI

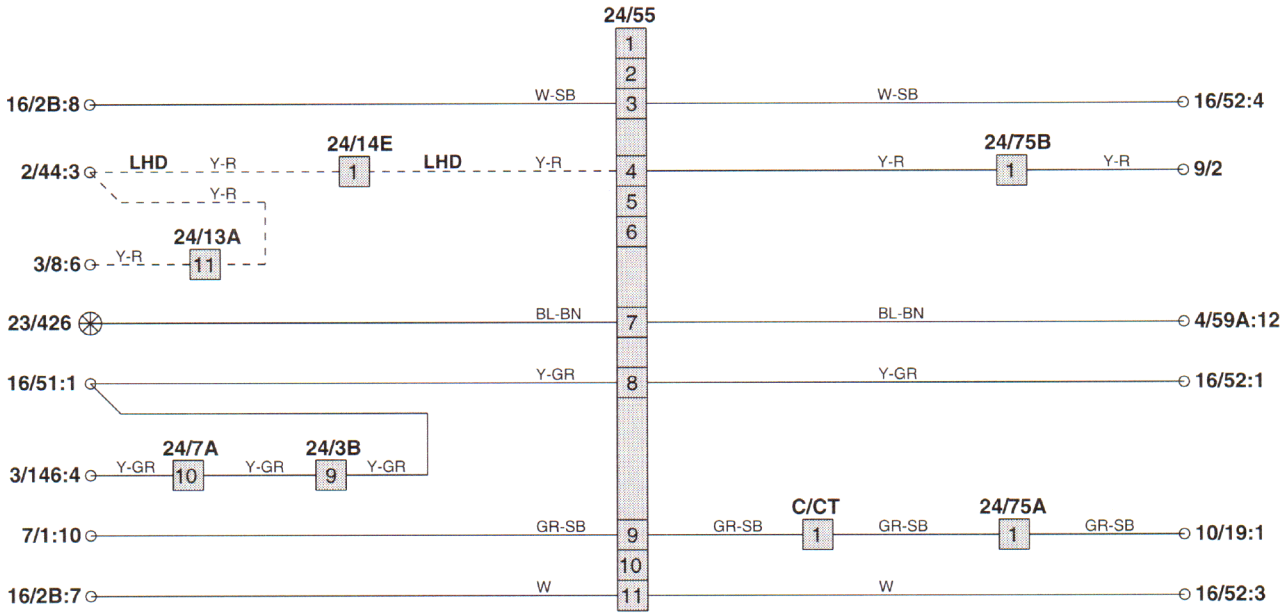

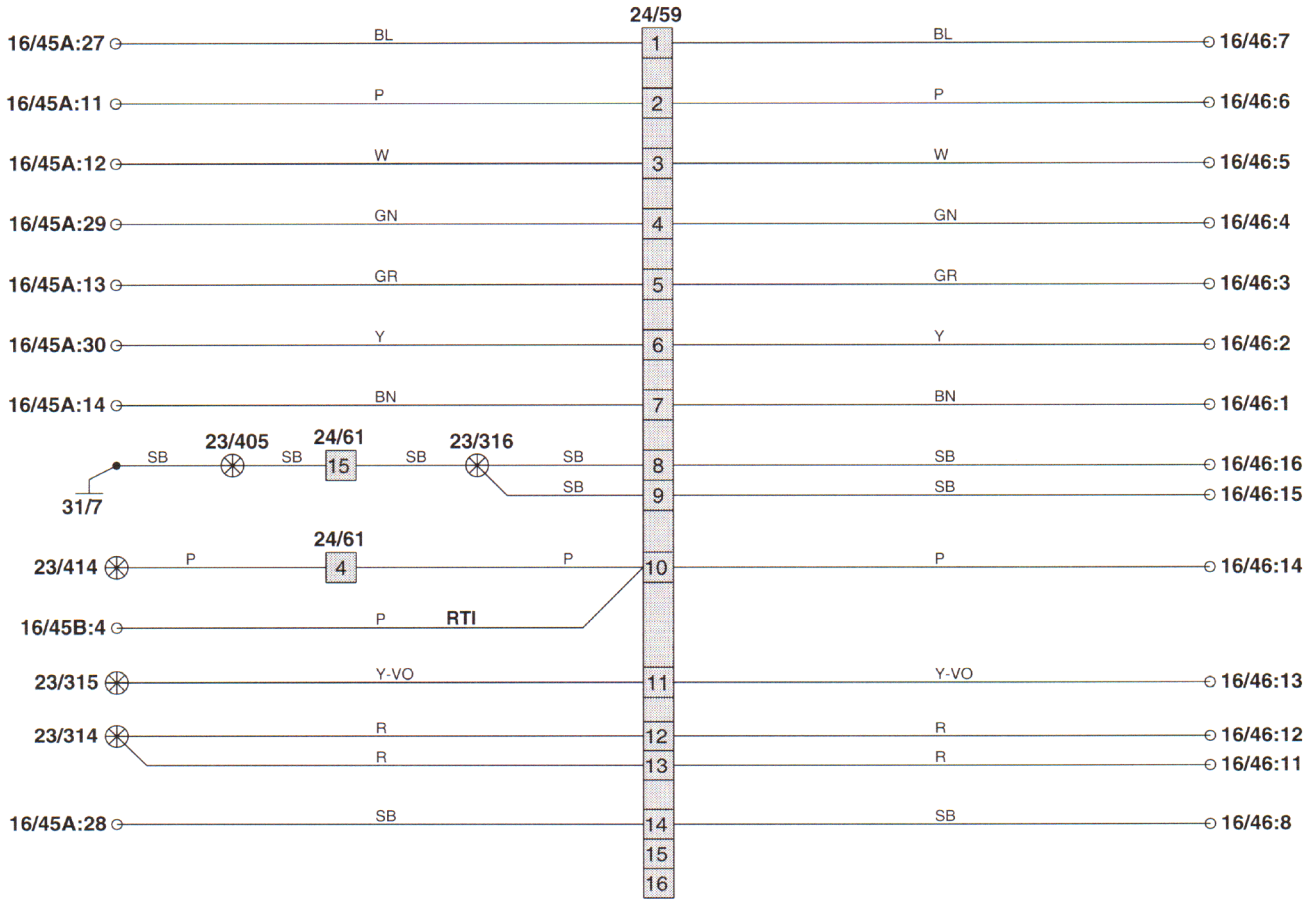

24/60 Black 24-pin (male - female)
Firewall cable harness - Passenger door cable harness

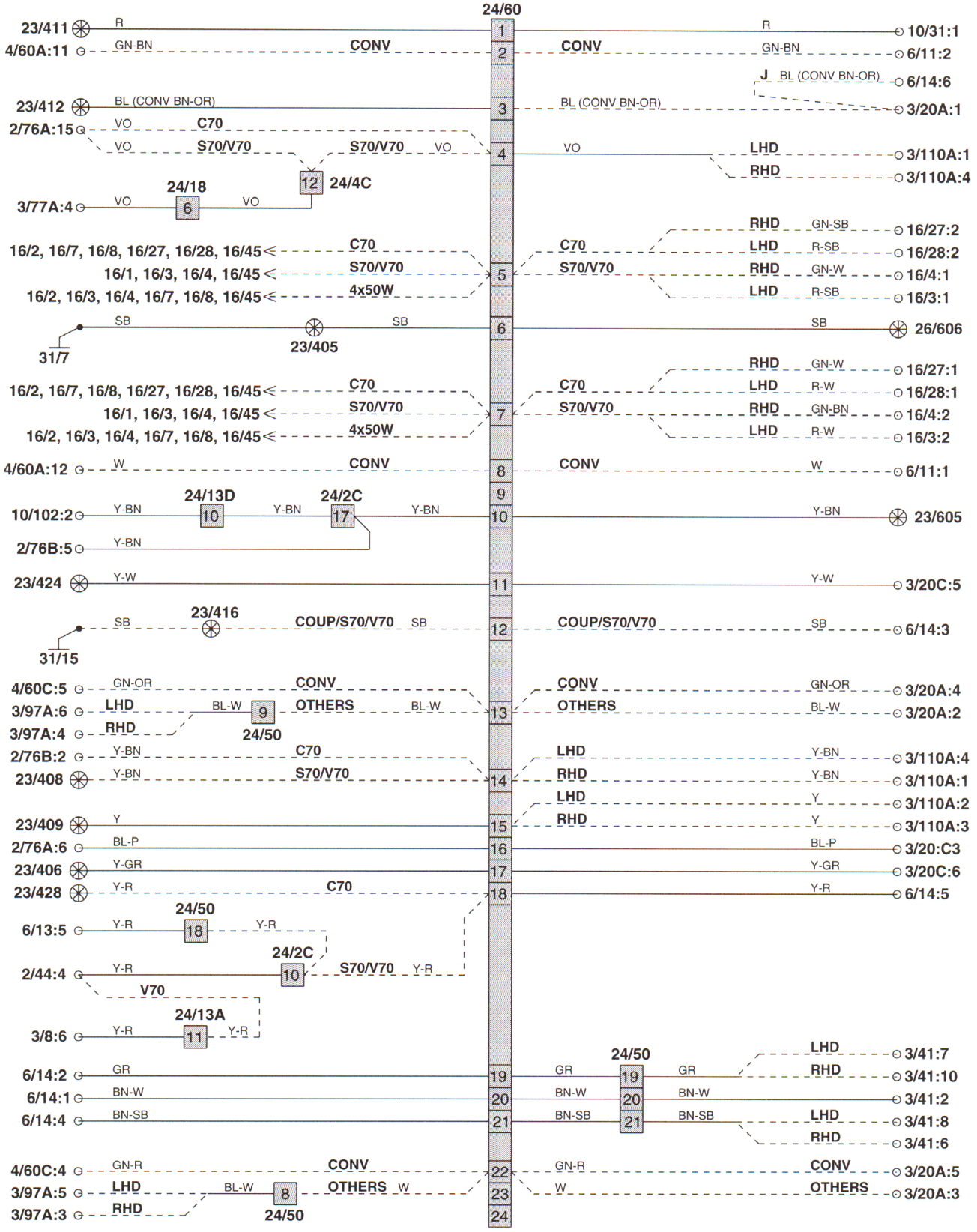

24/61 White 15-pin (female - male)
Firewall cable harness - RTI cable harness

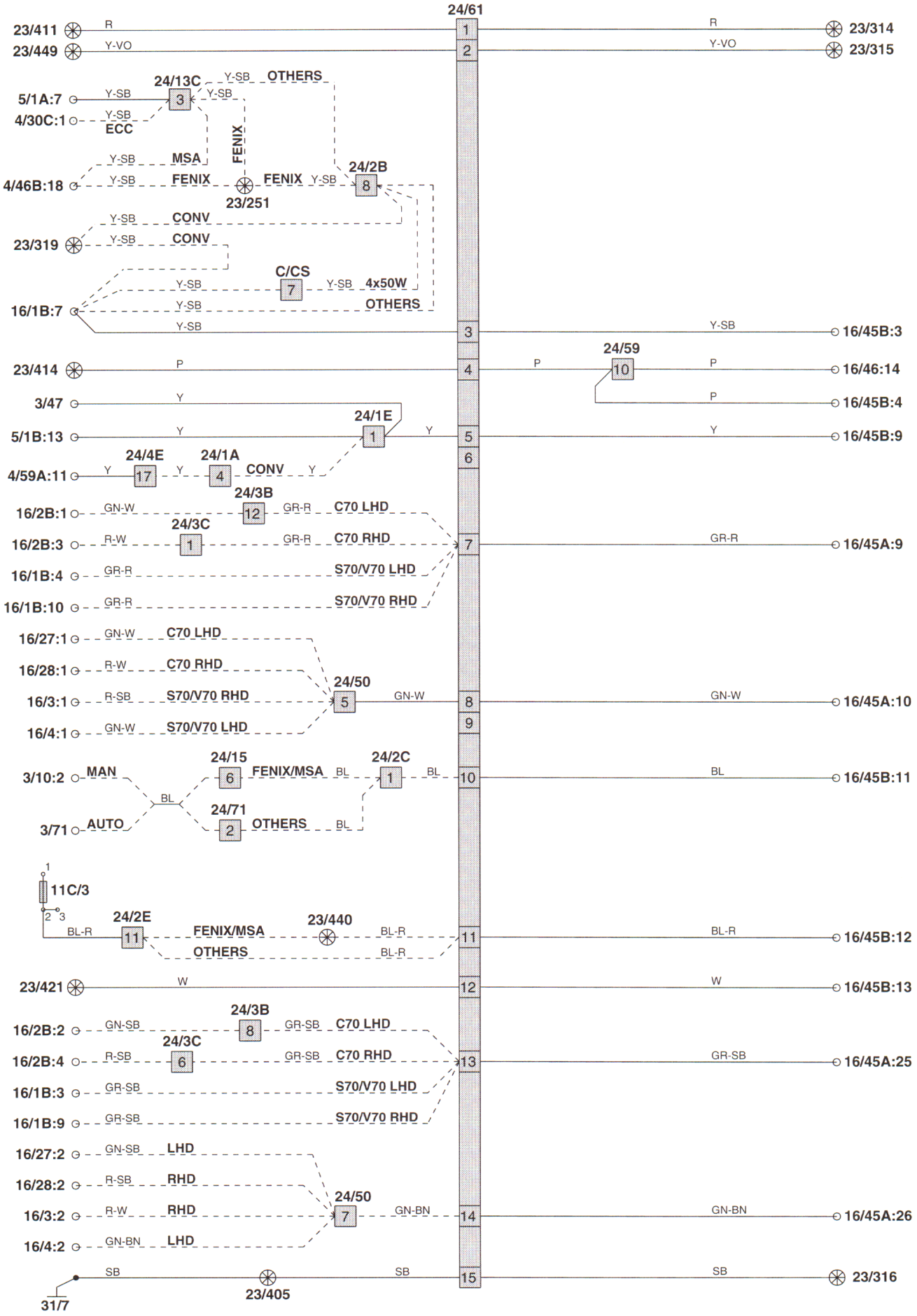

Connector 24/63

24/63 Light Grey 14-pin (female - male)
Firewall cable harness - A/C cable harness

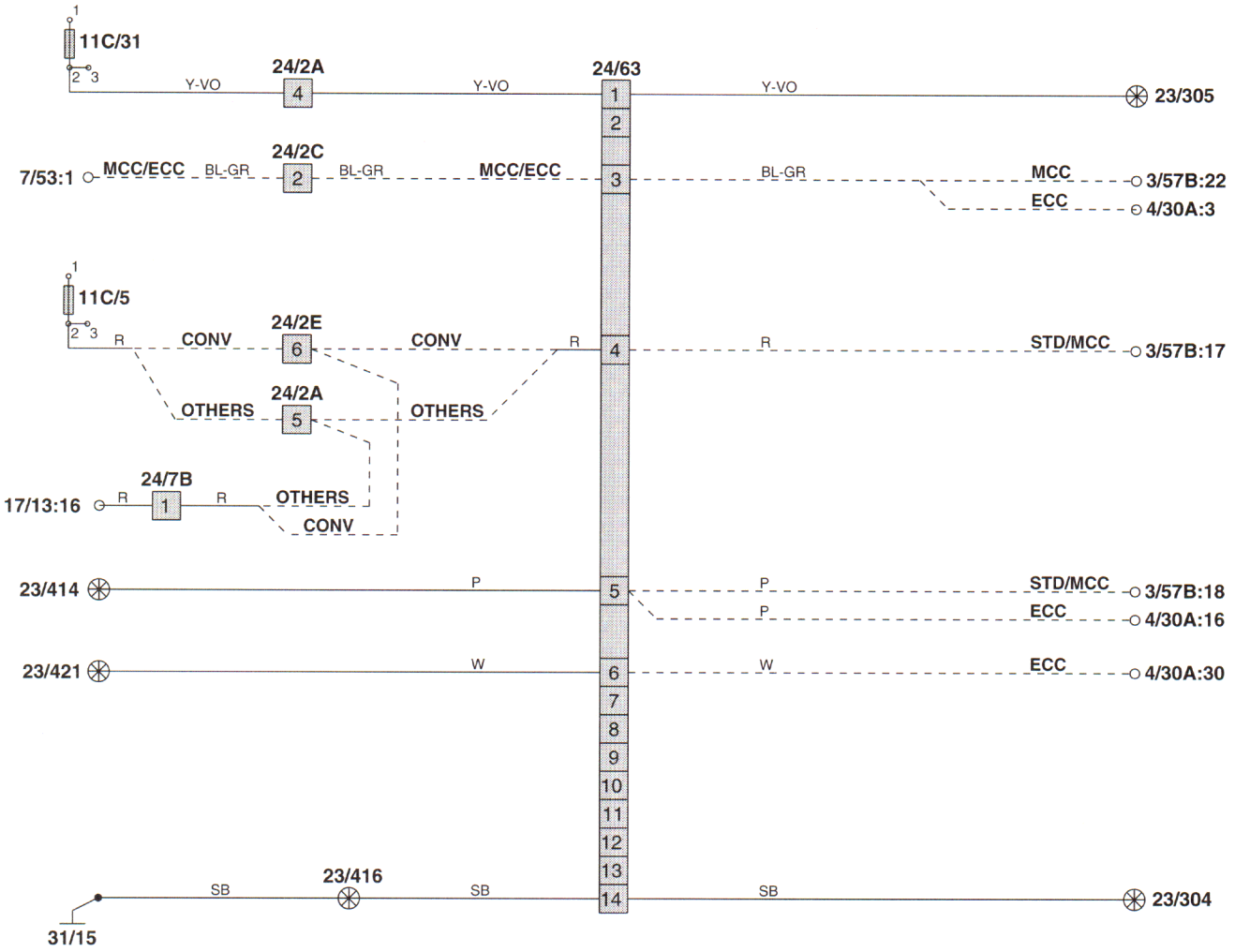

24/67 Natural 6-pin (female - male)
Left door sill cable harness - Tailgate cable harness

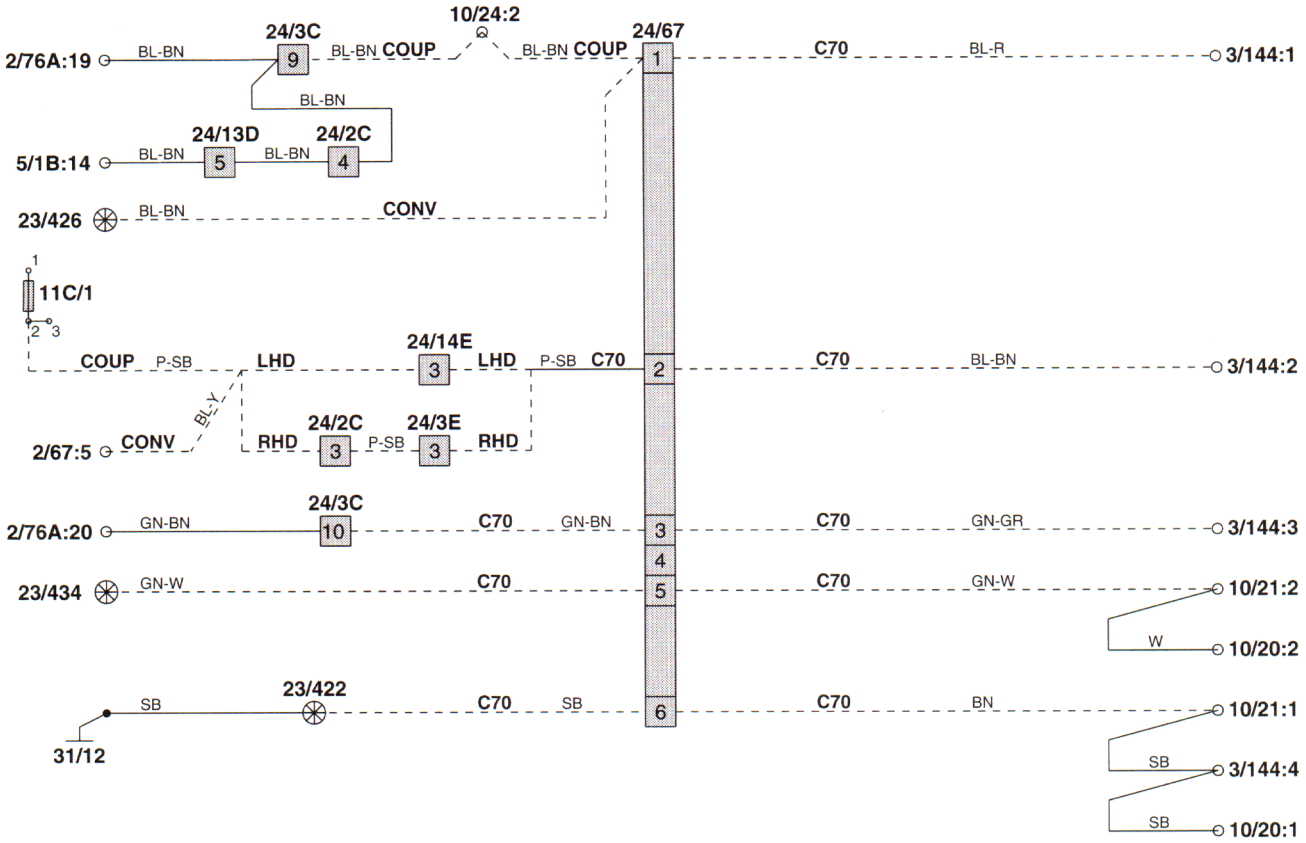

Connector 24/71

24/71 Gray 6-pin (female - male)
Engine compartment cable harness - Engine cable harness left side

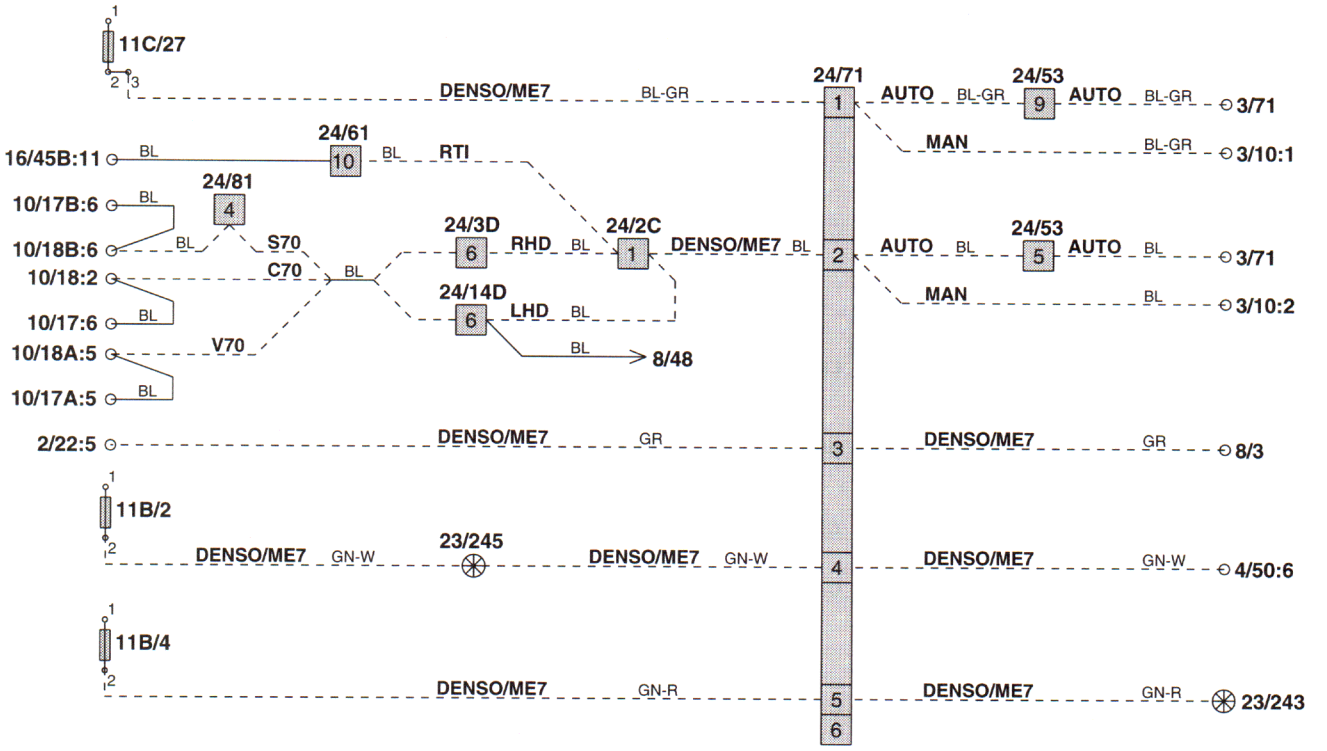

24/75A White 2-pin (female - male)
Right door sill cable harness - Cable harness soft-top

24/75B Gray 2-pin (female - male)
Right door sill cable harness - Cable harness soft-top

24/91 Black 2-pin (female - male)
Left door sill cable harness - Right door sill cable harness

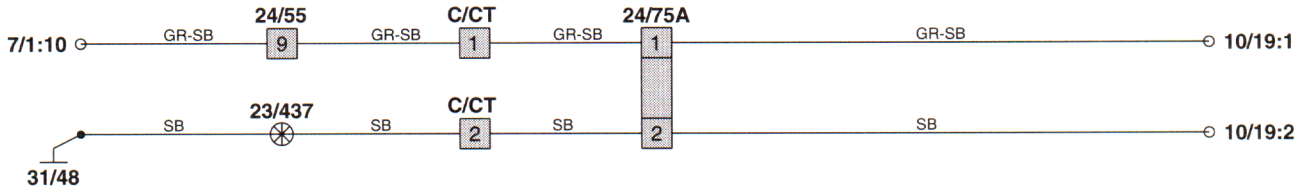

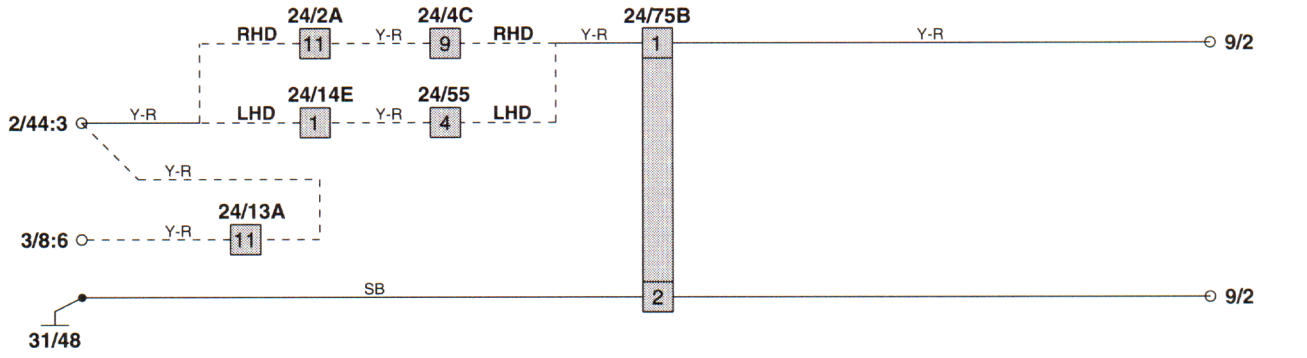

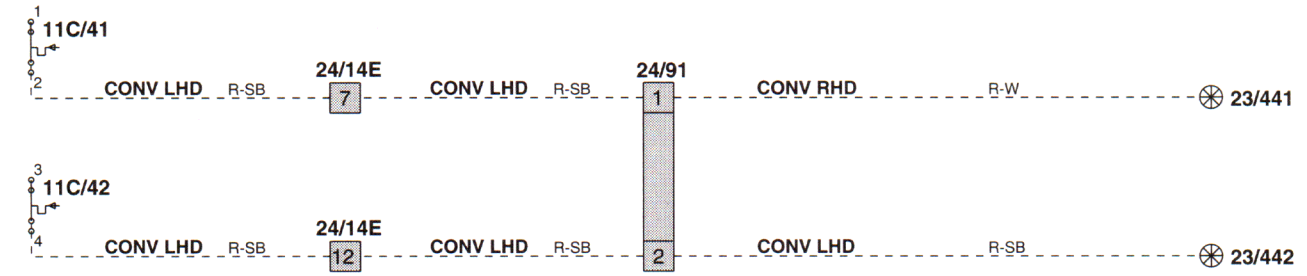

Connectors 24/94 and 24/95

24/94A Natural 6-pin (female - male)
Firewall cable harness - Driver's seat cable harness

24/94B White 3-pin (female - male)
Firewall cable harness - Driver's seat cable harness

24/95A Natural 6-pin (female - male)
Firewall cable harness - Passenger seat cable harness

24/95B White 3-pin (female - male)
Firewall cable harness - Passenger seat cable harness

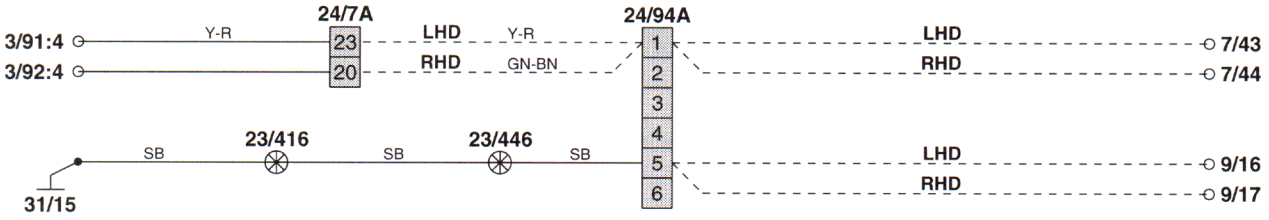

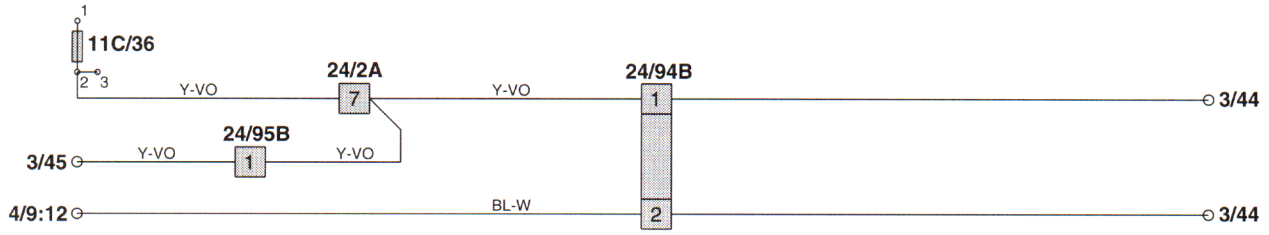

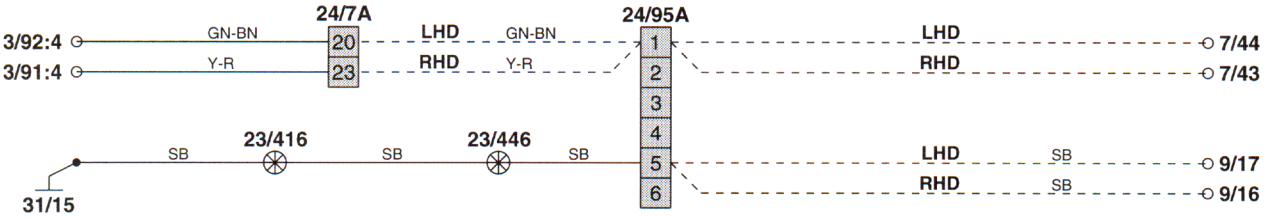

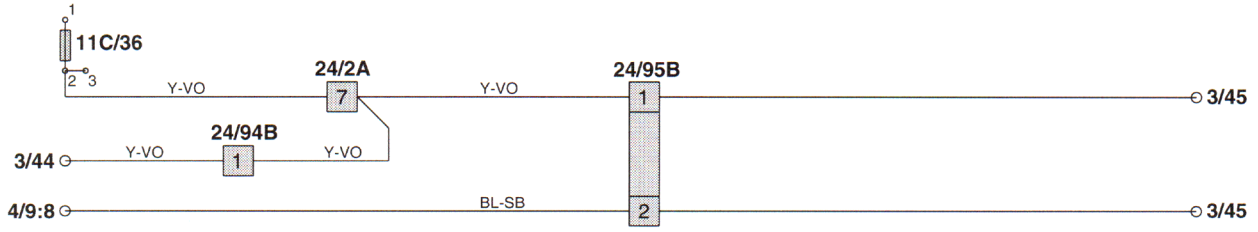

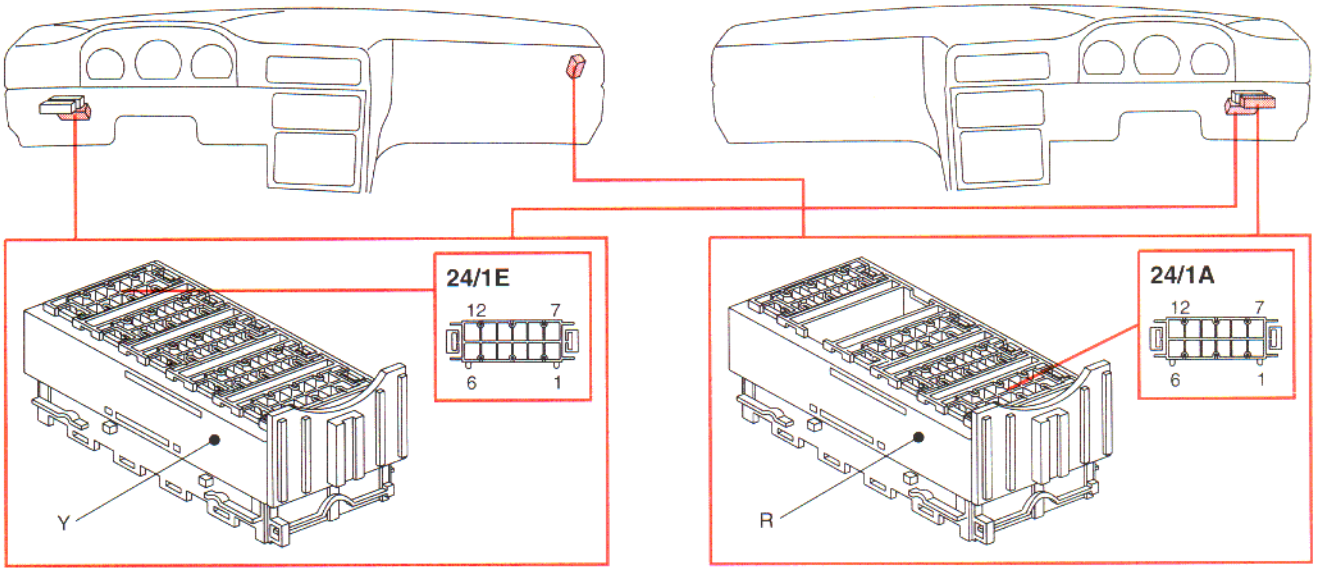

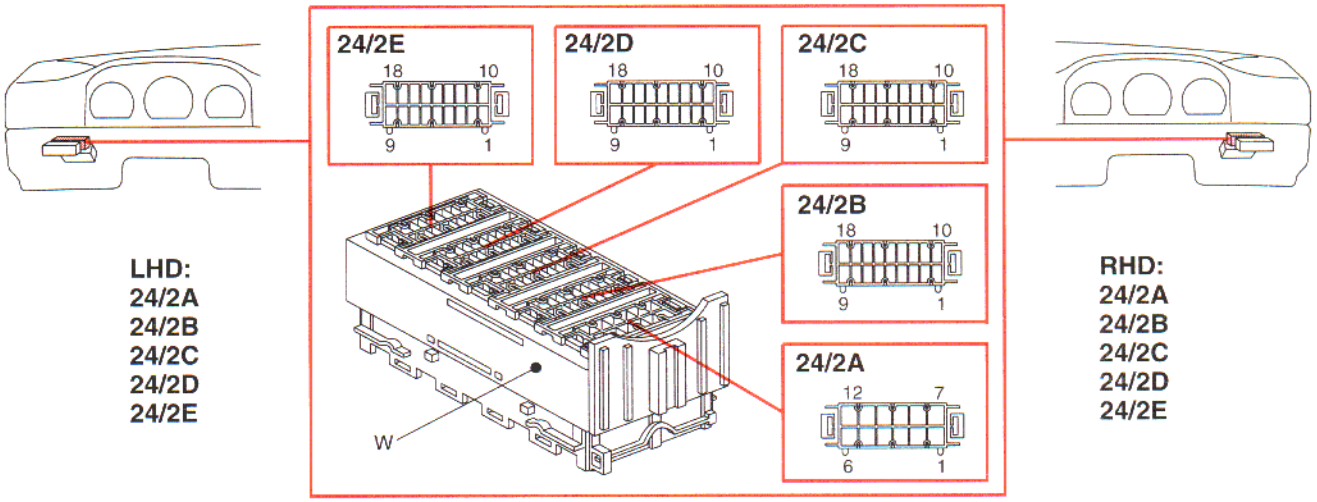

LHD:
24/2A
24/2B
24/2C
24/2D
24/2E

RHD:
24/2A
24/2B
24/2C
24/2D
24/2E

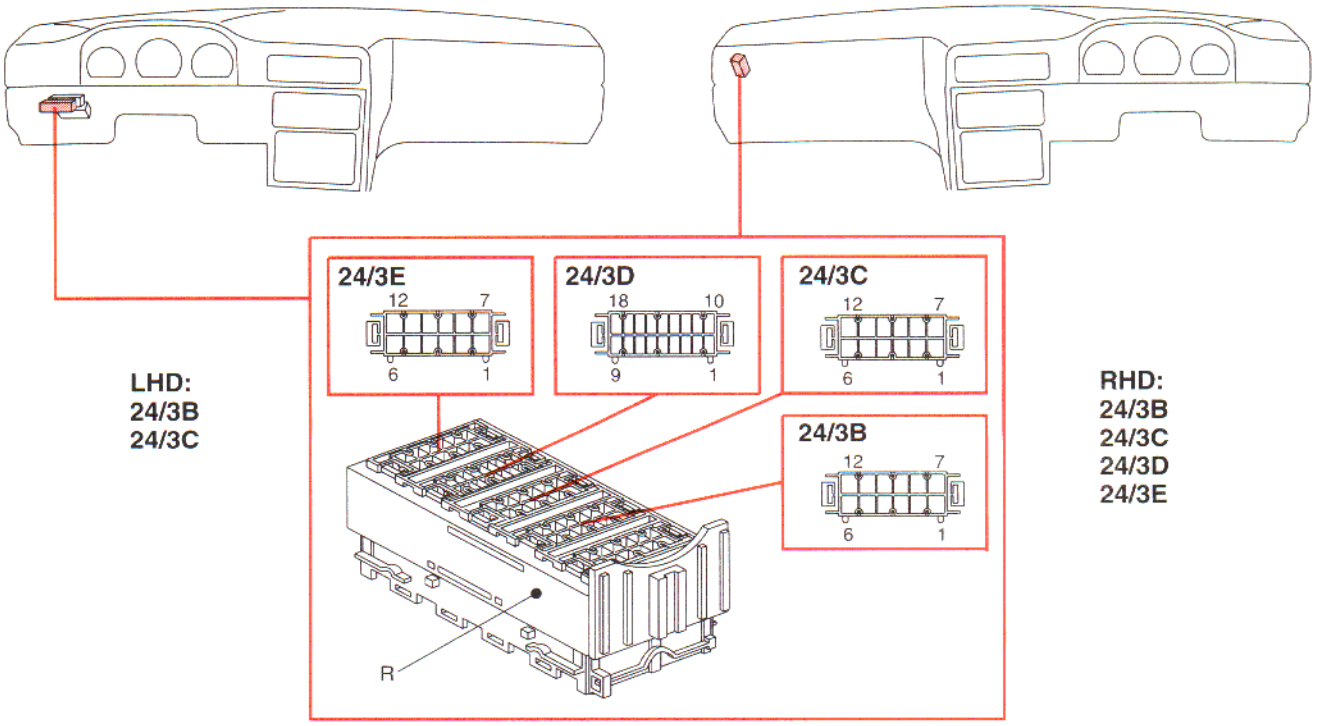

LHD:
24/3B
24/3C

RHD:
24/3B
24/3C
24/3D
24/3E

Connector

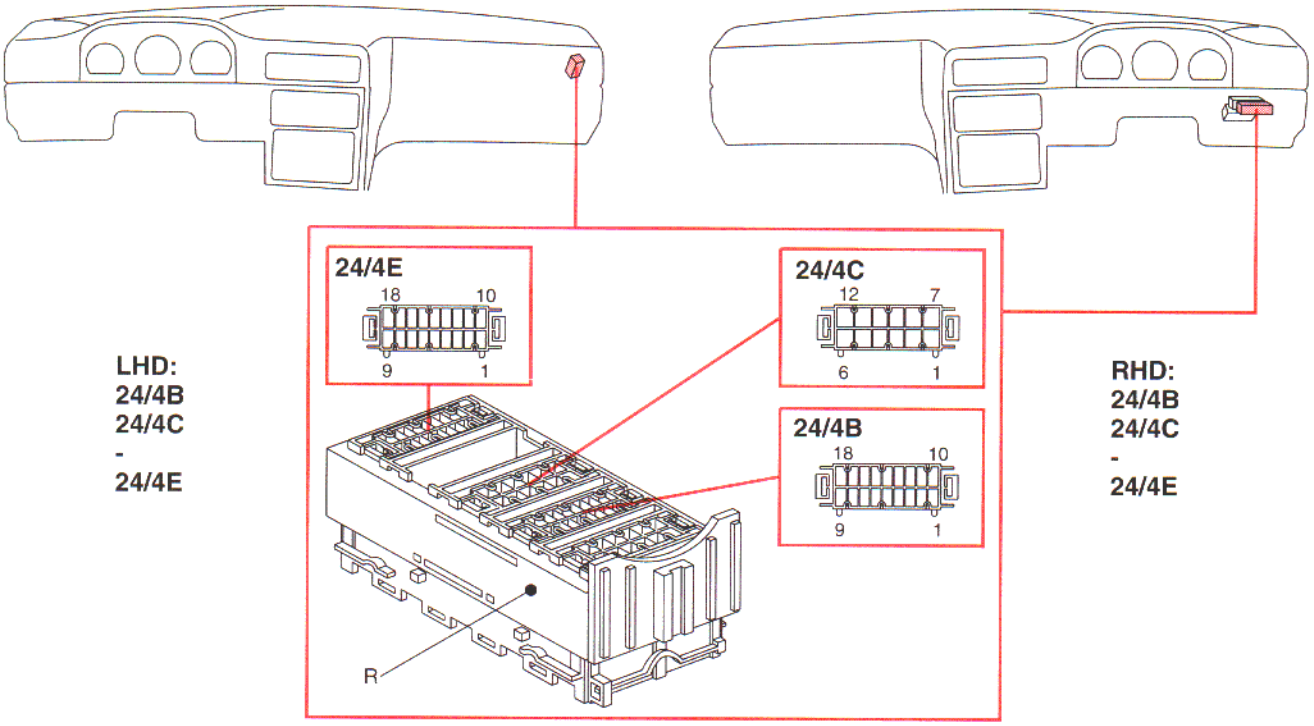
24/4E
18
10
9
1
24/4C
12
7
6
1
24/4B
18
10
9
1
R
LHD:
24/4B
24/4C
-
24/4E
RHD:
24/4B
24/4C
-
24/4E

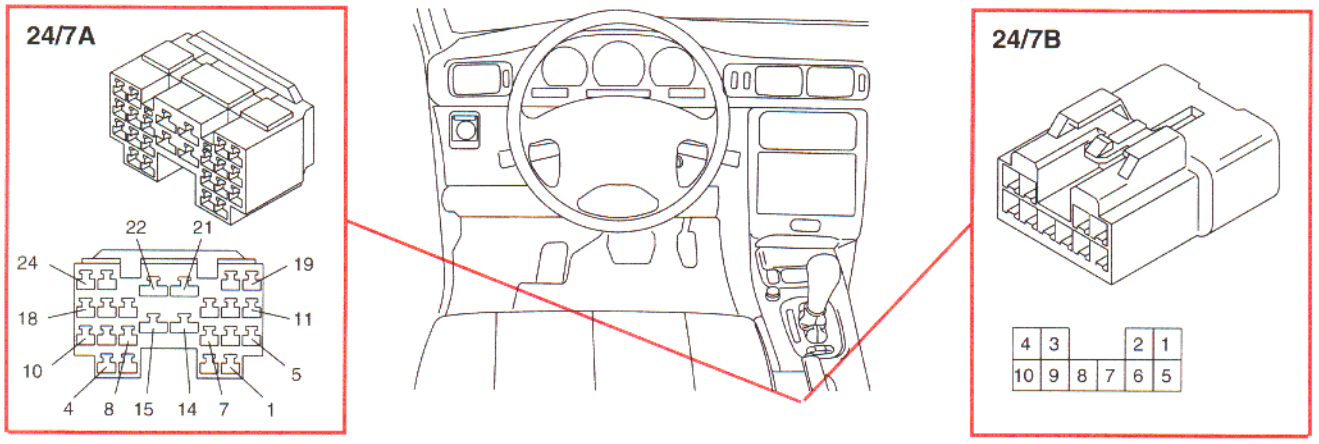
24/7A
22
21
24
19
18
11
10
5
4
8
15
14
7
1
24/7B
4
3
2
1
10
9
8
7
6
5

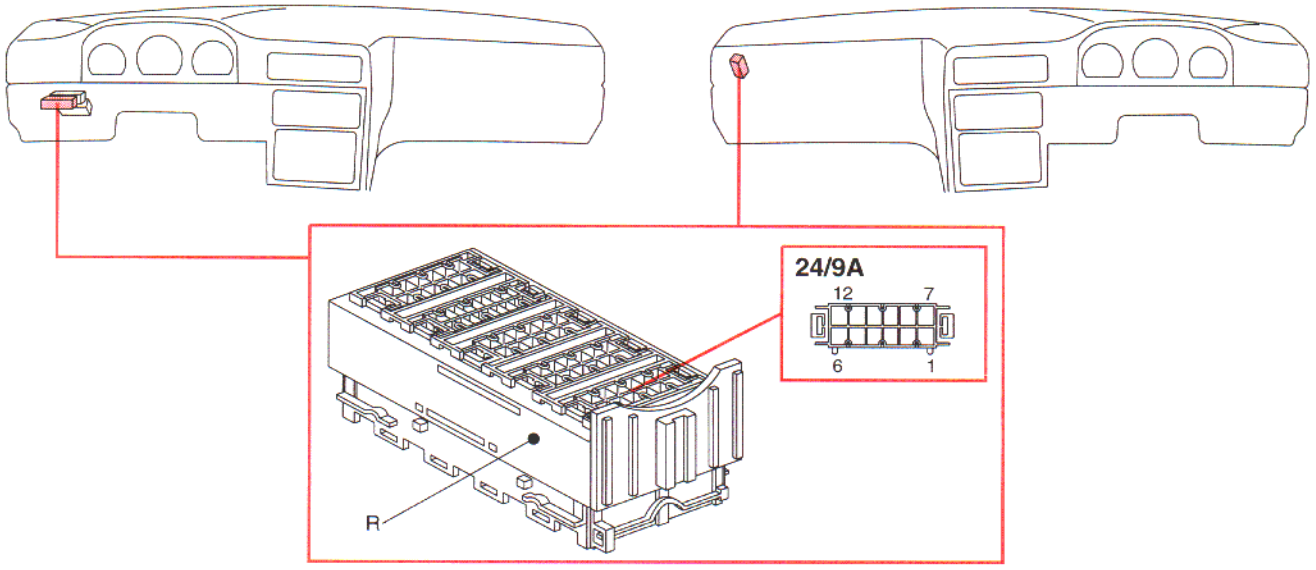
24/9A
12
7
6
1
R

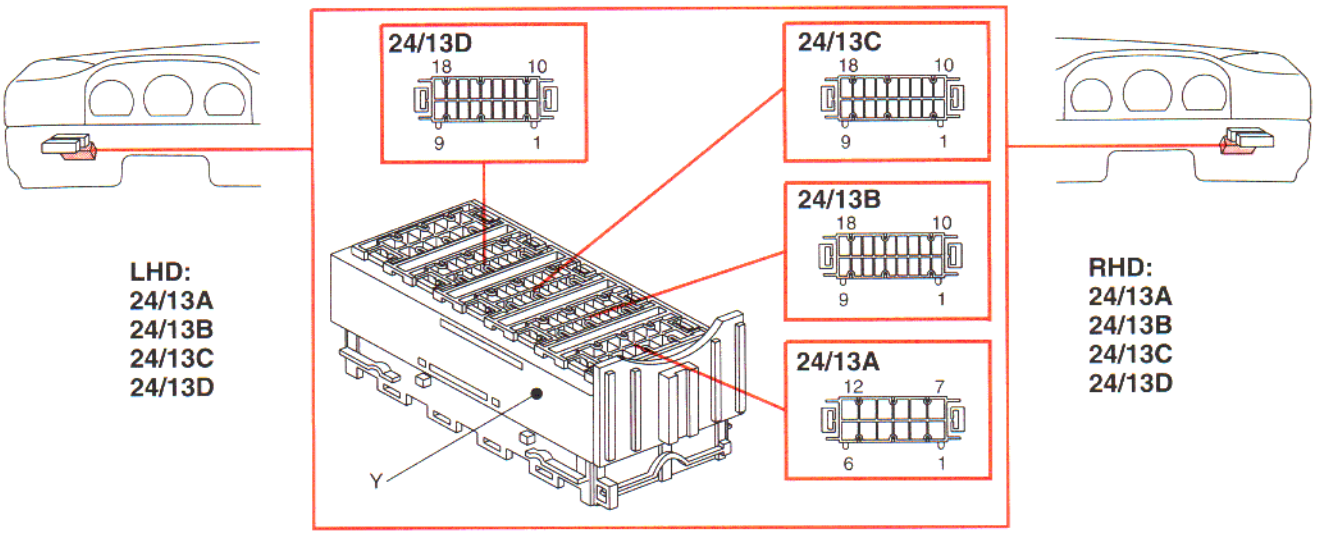
24/13D
18
10
9
1
24/13C
18
10
9
1
24/13B
18
10
9
1
24/13A
12
7
6
1
Y
LHD:
24/13A
24/13B
24/13C
24/13D
RHD:
24/13A
24/13B
24/13C
24/13D

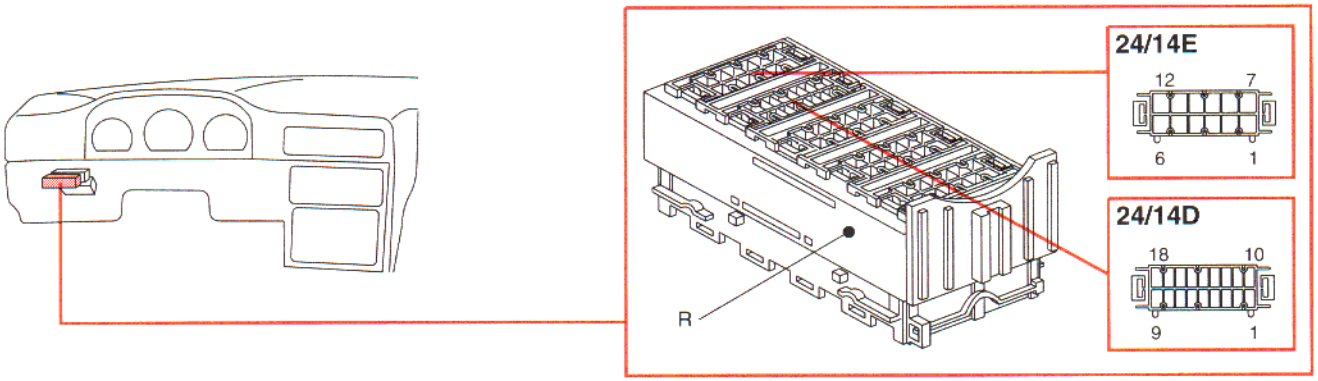
24/14E
12
7
6
1
24/14D
18
10
9
1
R

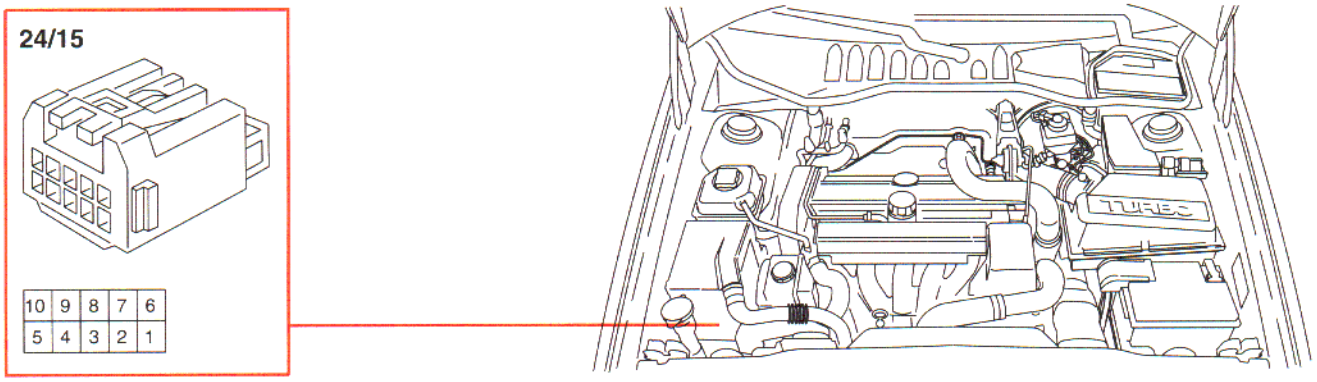
24/15
10 9 8 7 6
5 4 3 2 1

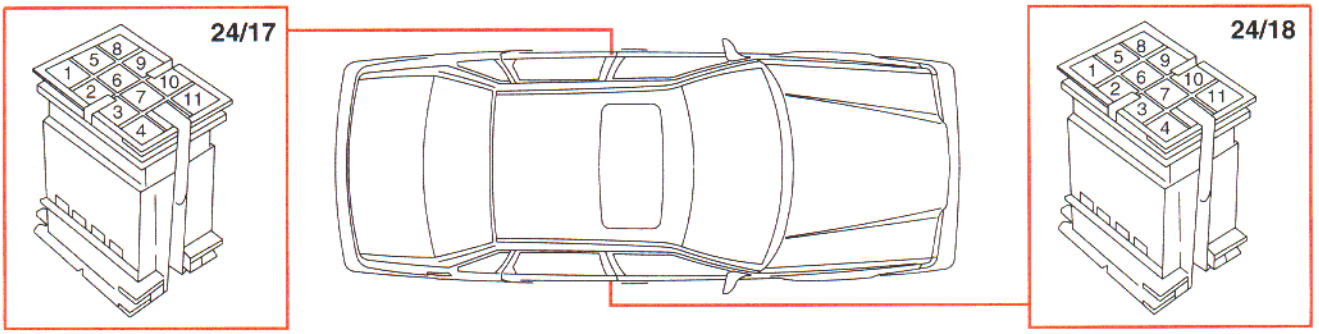
24/17
1 2 3 4 5 6 7 8 9 10 11
24/18
1 2 3 4 5 6 7 8 9 10 11

Connector

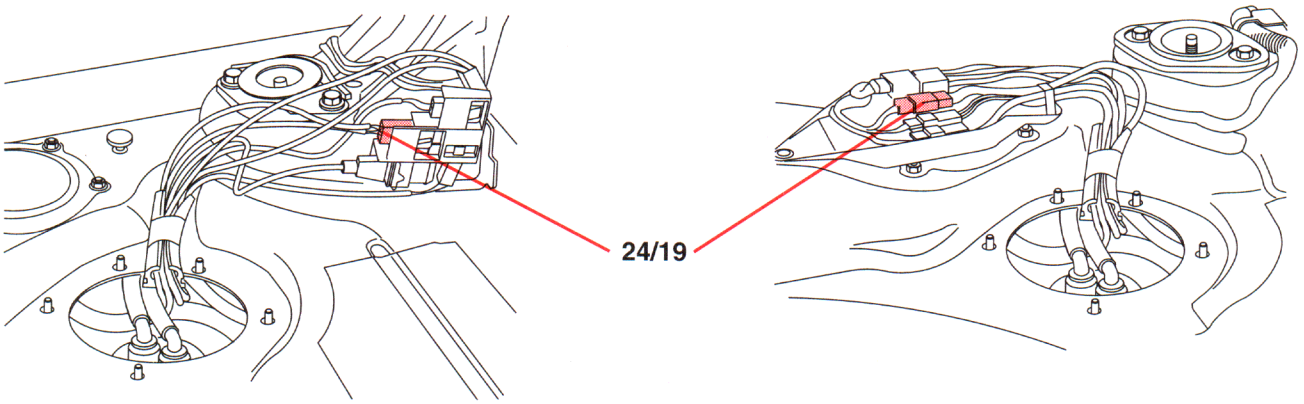

S70, C70

V70

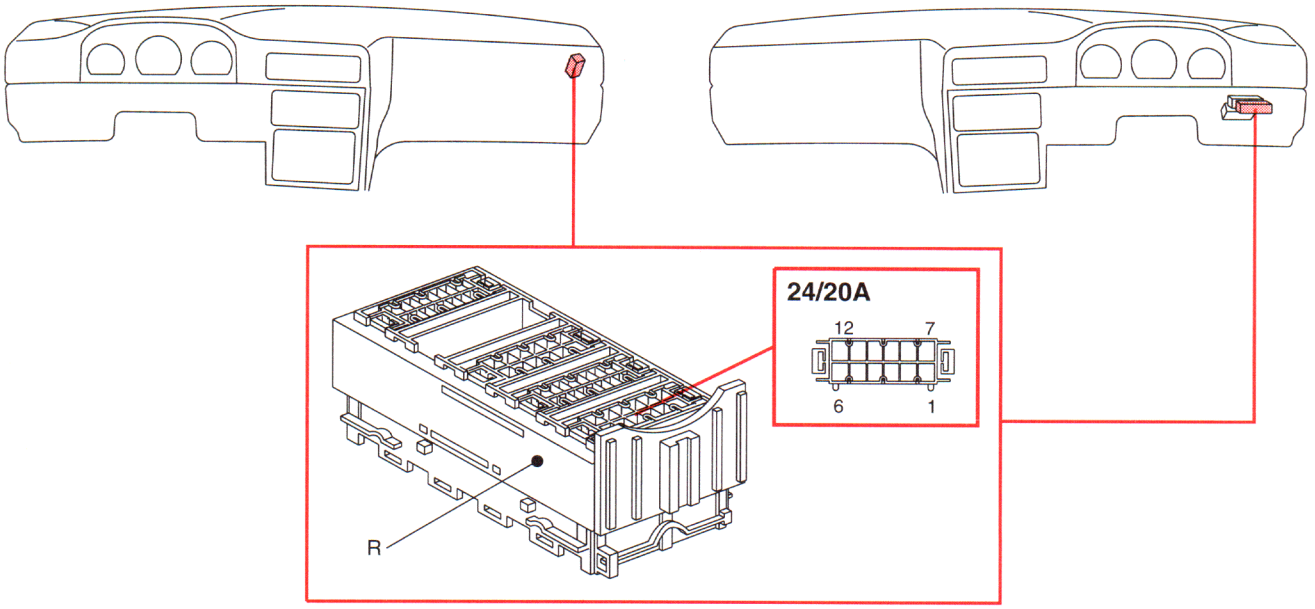

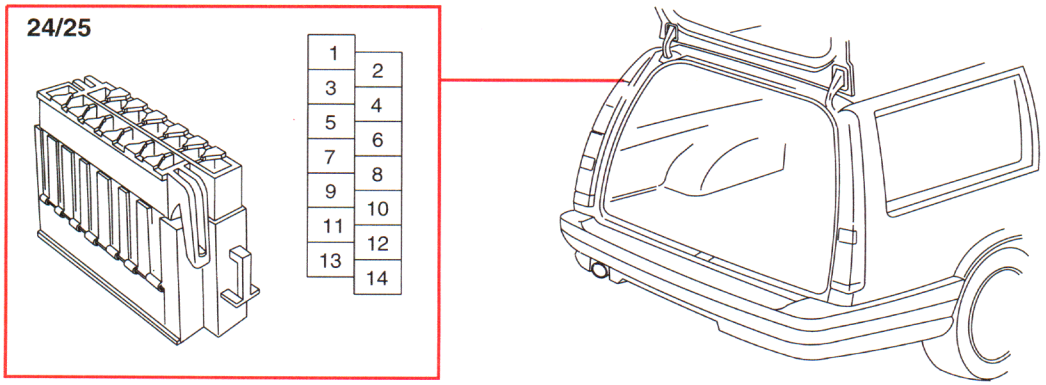

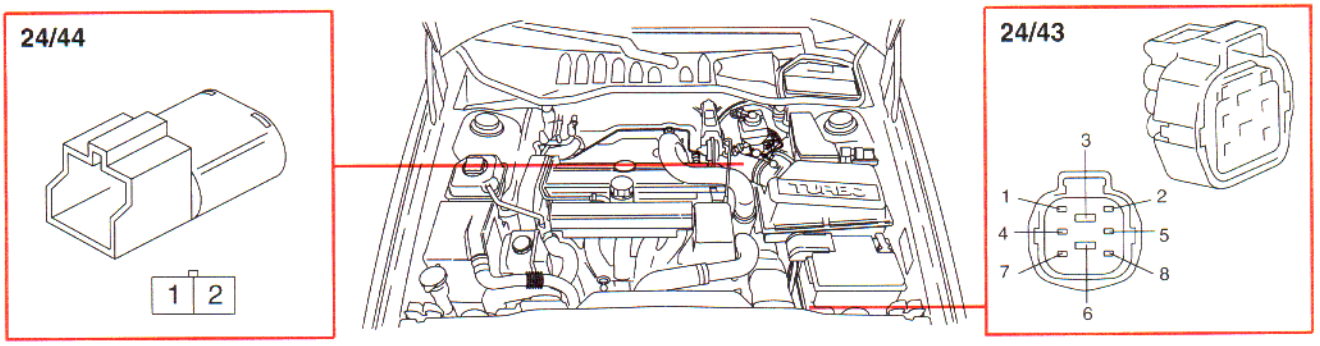
24/44
1
2
24/43
3
1
2
4
5
7
8
6

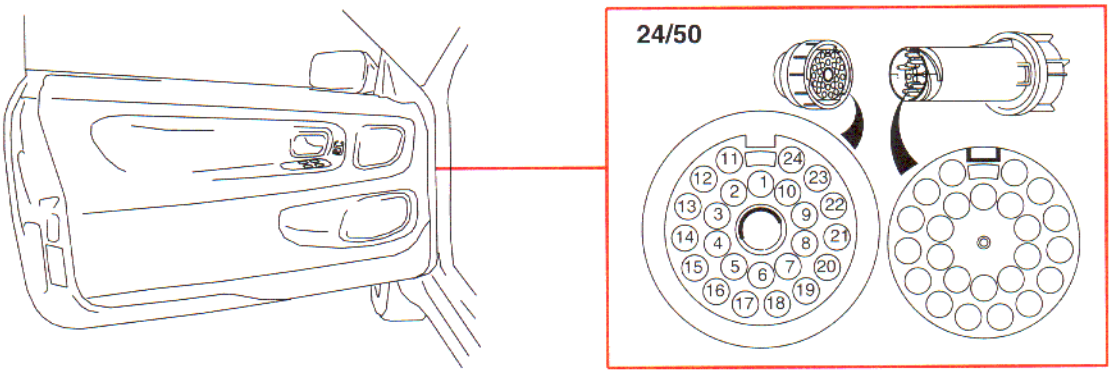
24/50

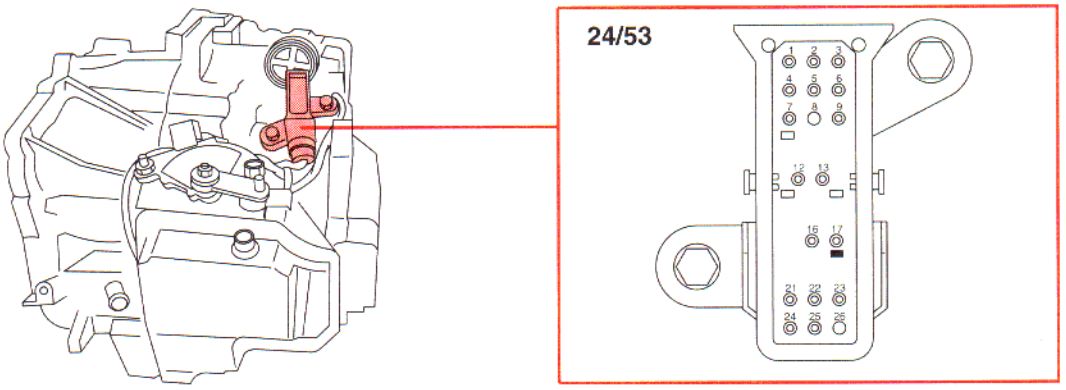
24/53

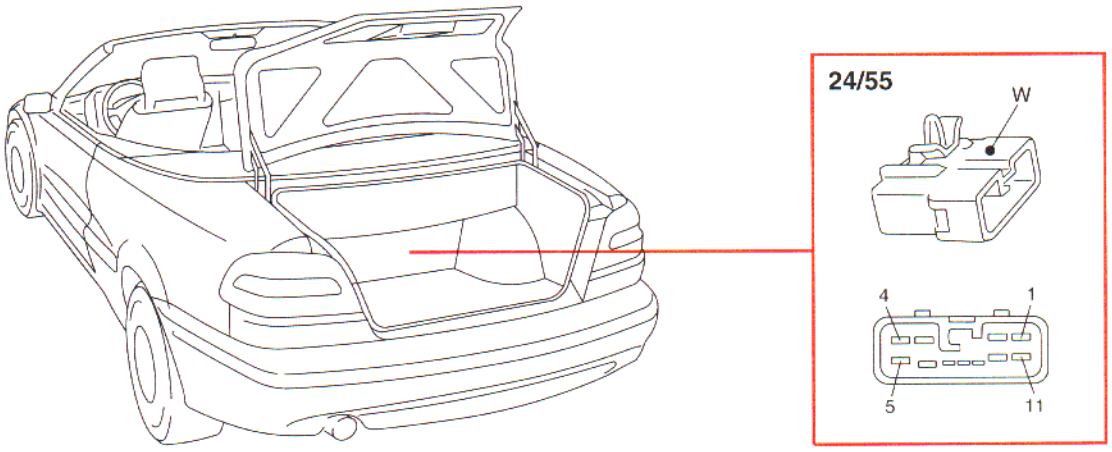
24/55
W
4
1
5
11

Connector

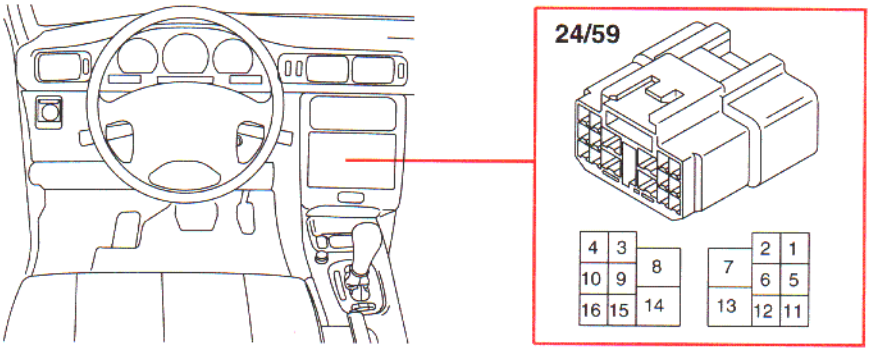
24/59
4 3 8
10 9
16 15 14
7 2 1
6 5
13 12 11

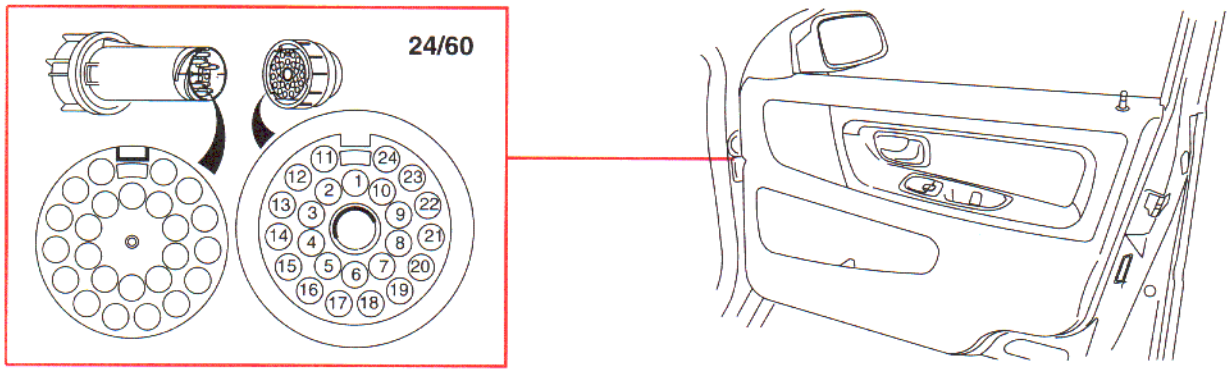
24/60
11 24 12 2 1 10 23 13 3 9 22 14 4 8 21 15 5 6 7 20 16 17 18 19

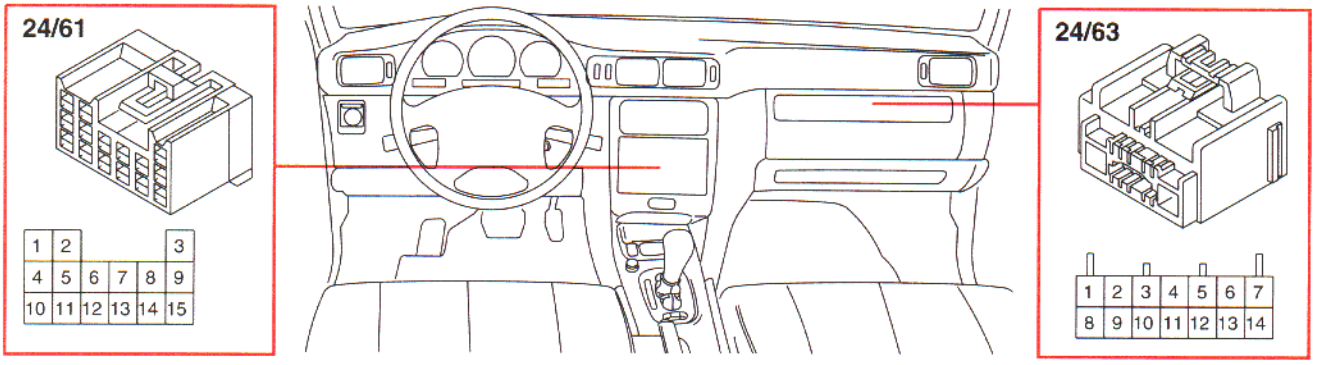
24/61
1 2 3
4 5 6 7 8 9
10 11 12 13 14 15
24/63
1 2 3 4 5 6 7
8 9 10 11 12 13 14

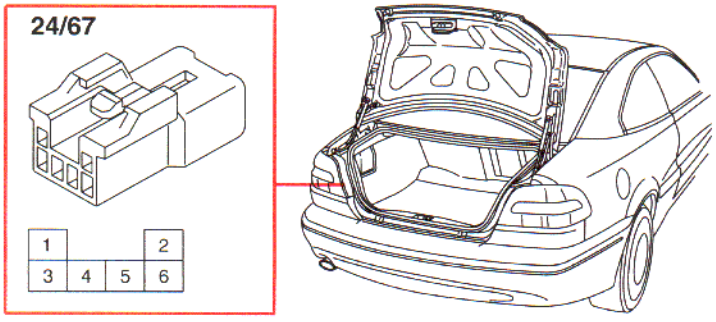
24/67
1 2
3 4 5 6

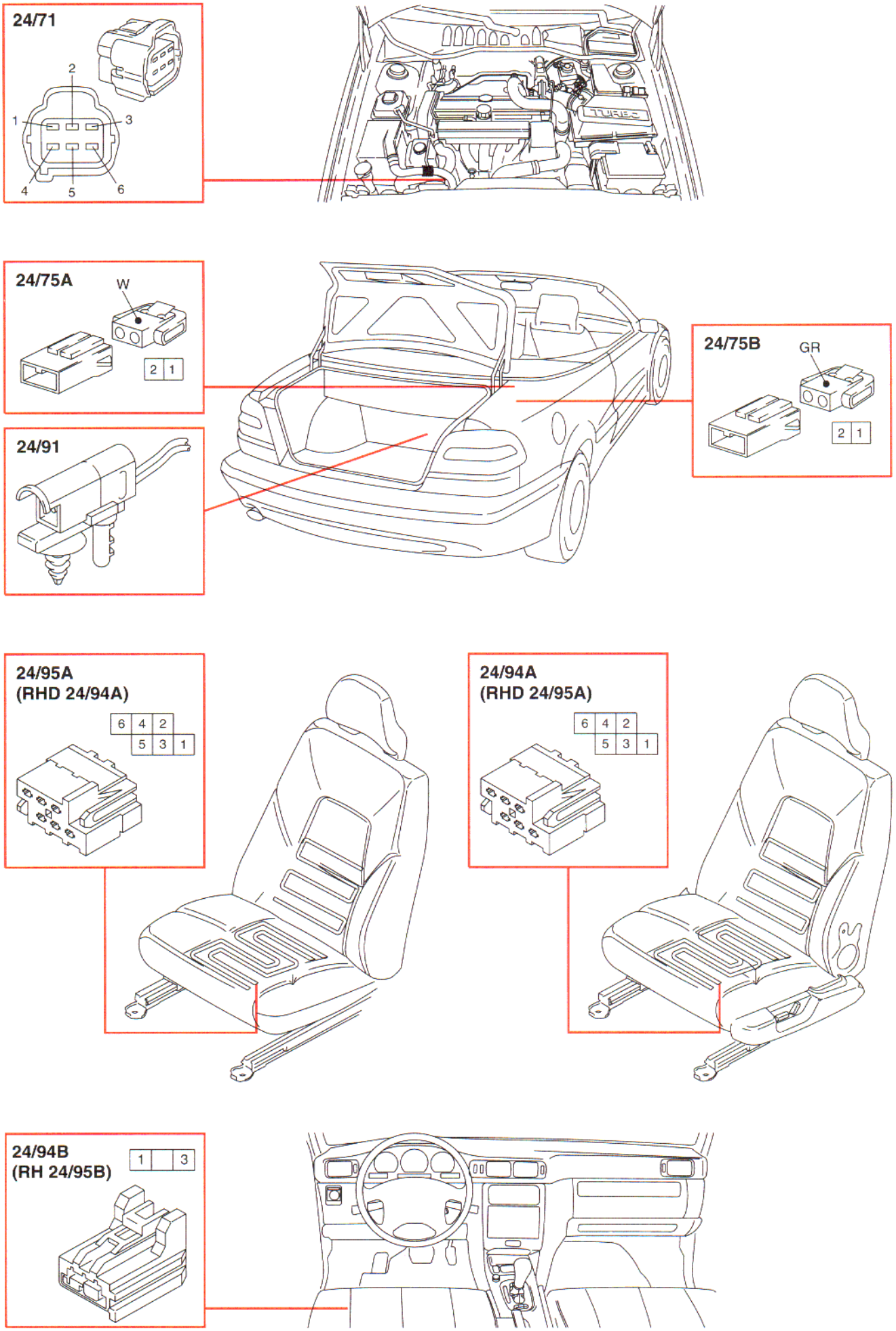
24/71
2
1
3
4
5
6
24/75A
W
2 1
24/91
24/75B
GR
2 1
24/95A
(RHD 24/94A)
6 4 2
5 3 1
24/94A
(RHD 24/95A)
6 4 2
5 3 1
24/94B
(RH 24/95B)
1 3

23/8 (Engine cable harness, MSA)
23/9 (Engine cable harness, FENIX)
23/11 (Engine cable harness, FENIX/DENSO/ME7)
23/12 (Engine cable harness, MSA)

23/8
MSA

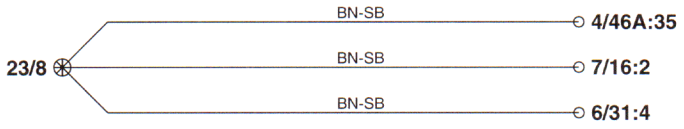

23/9
FENIX

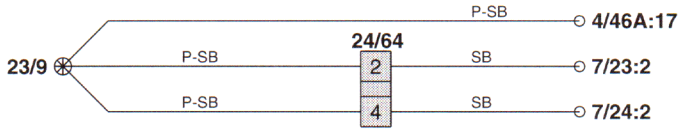

23/11
FENIX/DENSO/ME7

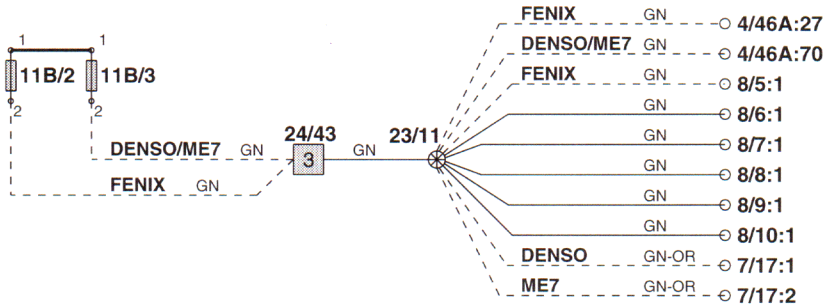

23/12
MSA

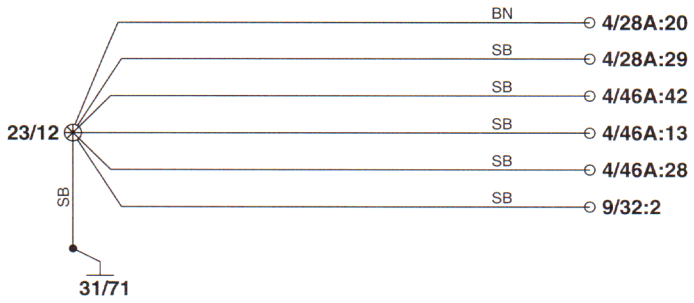

Junction points

23/14 (Adapter wiring glow plugs, MSA)
23/16 (Engine cable harness, MSA)
23/17 (Engine cable harness, MSA)
23/18 (Engine cable harness, MSA)

23/14
MSA

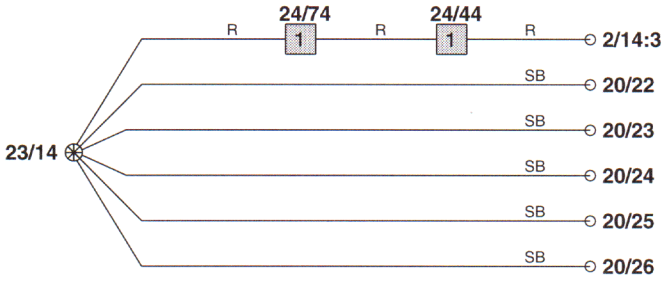

23/16
MSA

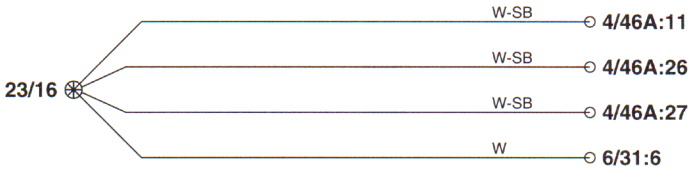

23/17
MSA

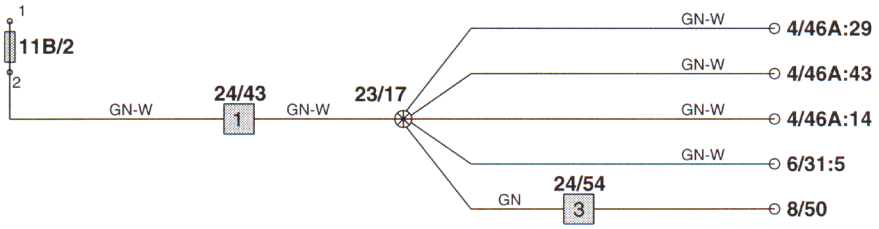

23/18
MSA

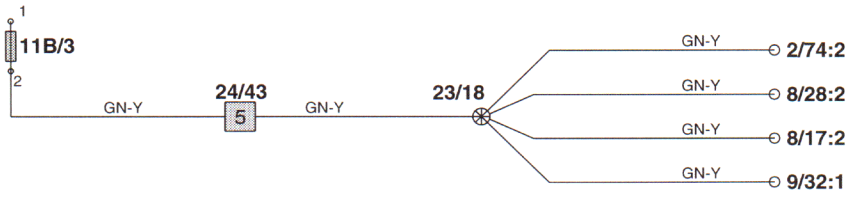

23/22 (Engine cable harness, DENSO)
23/201 (Engine compartment cable harness, FENIX/MSA)
23/203 (Engine compartment cable harness)
23/207 (Engine compartment cable harness, C70)

23/22 DENSO

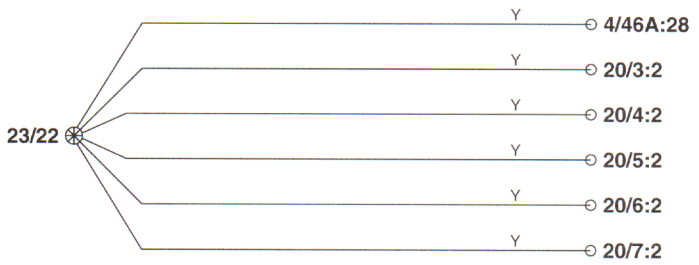

23/201 FENIX/MSA

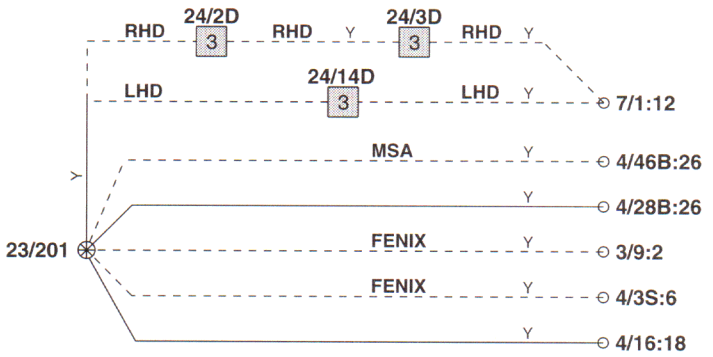

23/203

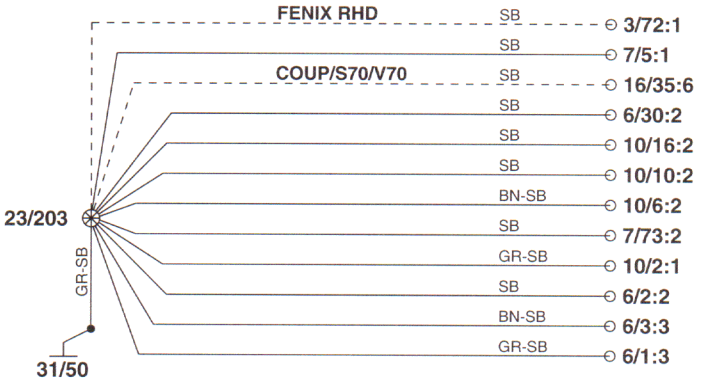

23/207 C70

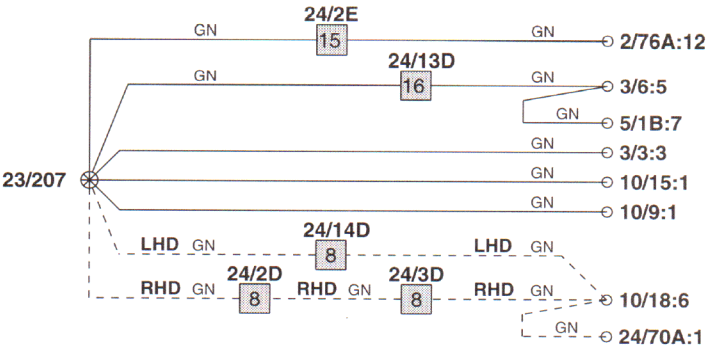

Junction points

23/207 (Engine compartment cable harness, S70)
23/207 (Engine compartment cable harness, V70)
23/208 (Engine compartment cable harness, C70)
23/208 (Engine compartment cable harness, S70)

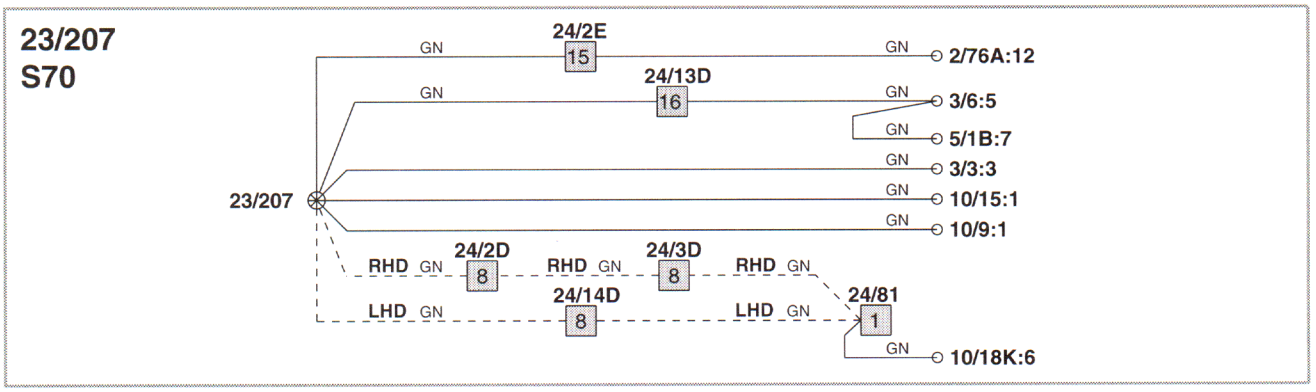

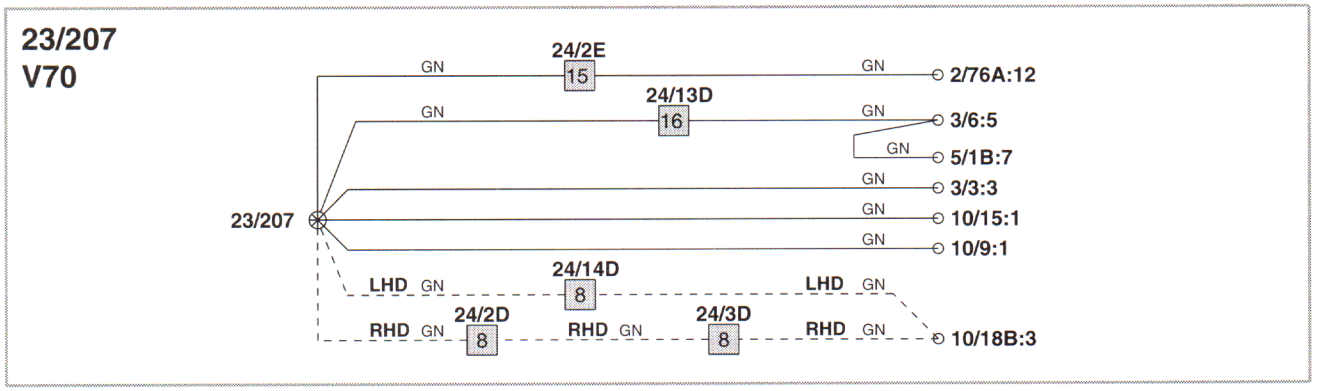

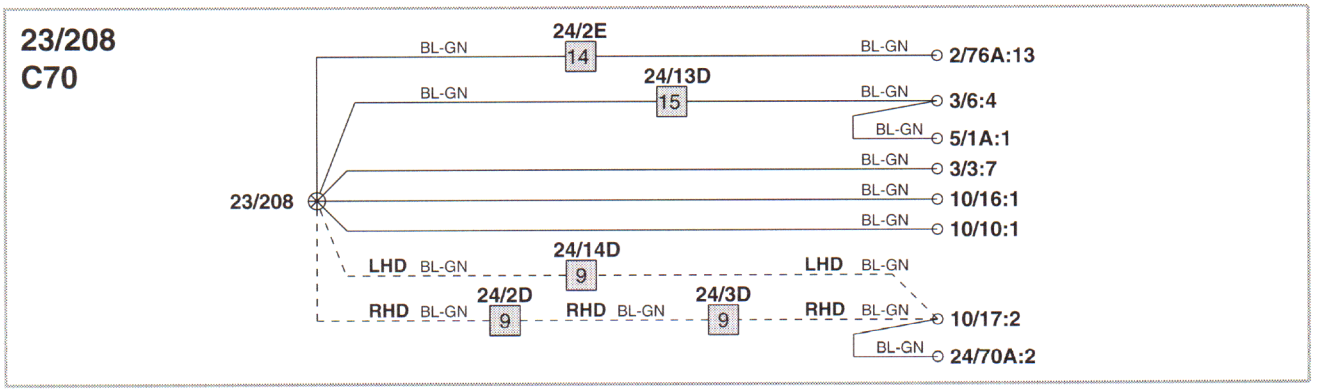

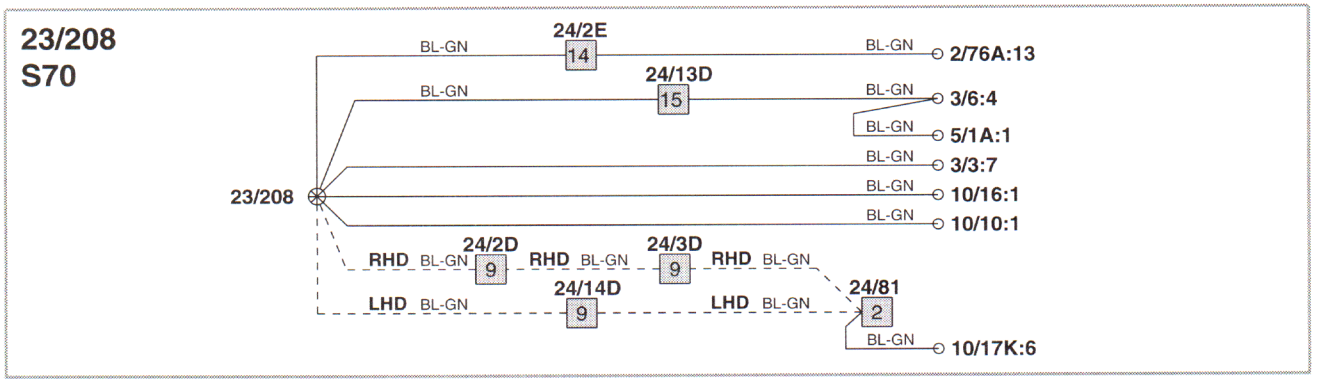

23/208 (Engine compartment cable harness, V70)
23/221 (Engine compartment cable harness, DENSO/ME7)
23/222 (Engine compartment cable harness)
23/223 (Engine compartment cable harness)

23/208 V70

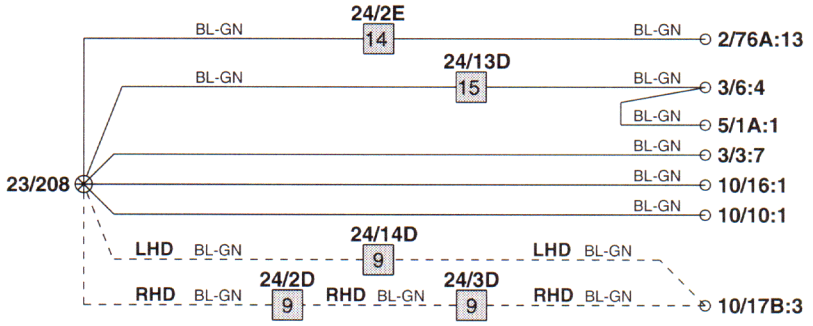

23/221 DENSO/ME7

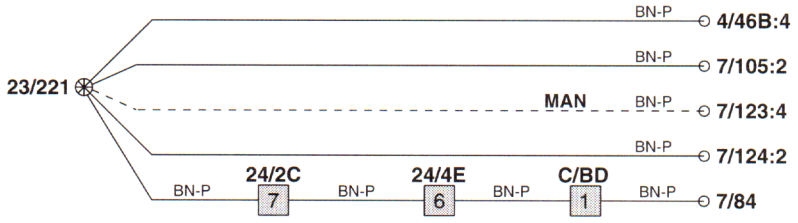

23/222

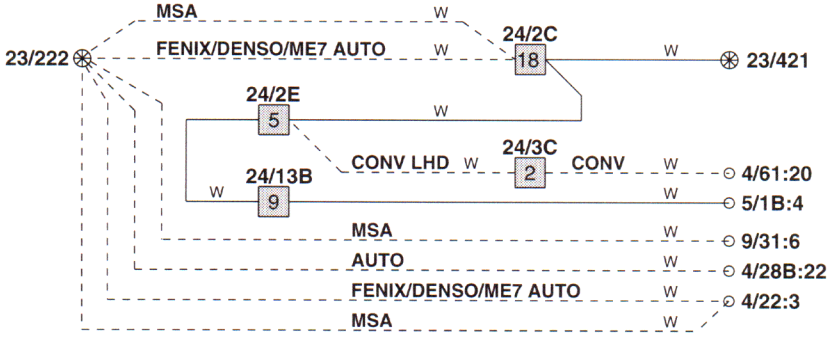

23/223

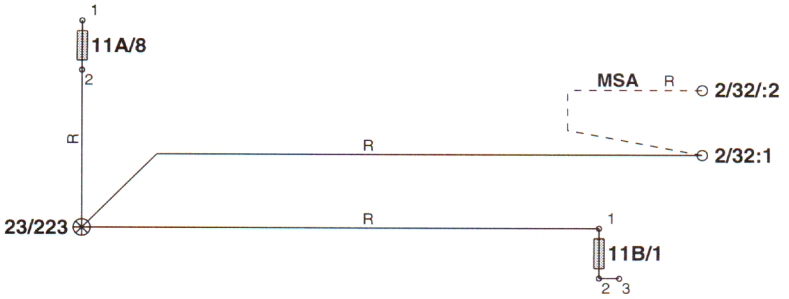

Junction points

23/226 (Engine compartment cable harness)
23/228 (Engine compartment cable harness)
23/229 (Engine compartment cable harness)
23/230 (Engine compartment cable harness)
23/232 (Engine cable harness, FENIX)

23/226

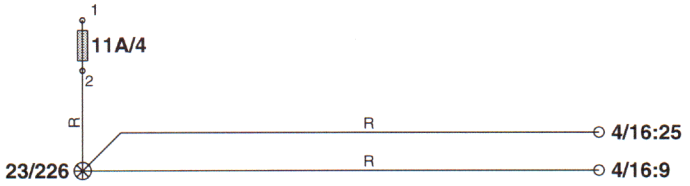

23/228

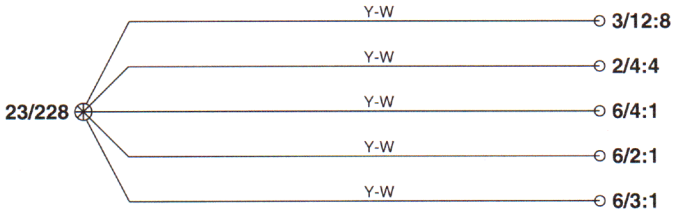

23/229

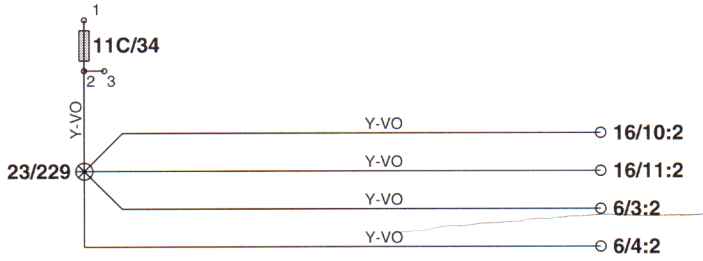

23/230

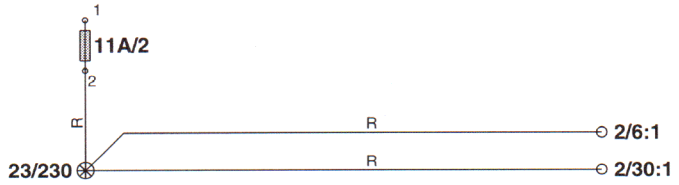

23/232
FENIX

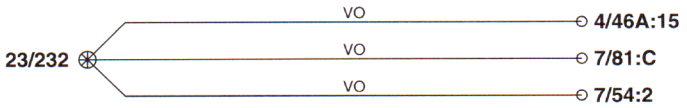

23/232 (Engine cable harness, DENSO)
23/232 (Engine cable harness, ME7)
23/239 (Engine compartment cable harness)
23/240 (Engine compartment cable harness)
23/241 (Engine compartment cable harness)

23/232 DENSO

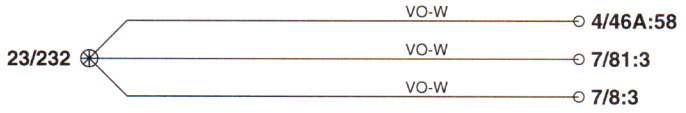

23/232 ME7

23/239

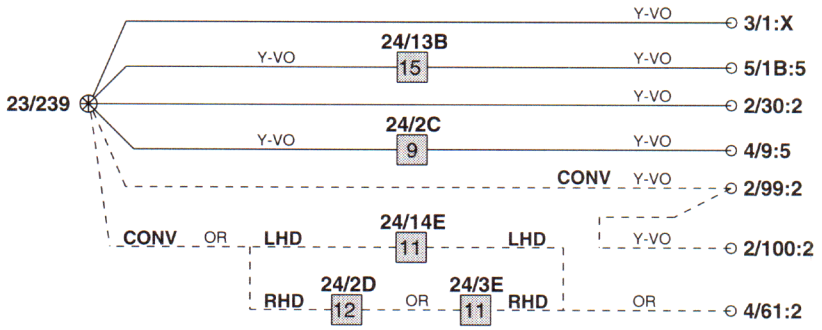

23/240

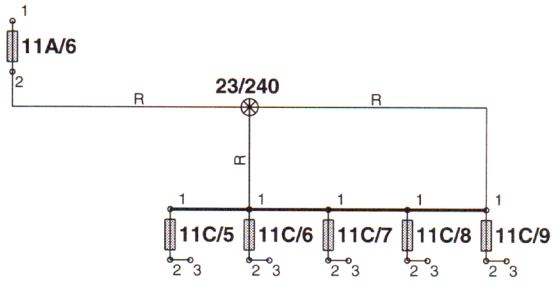

23/241

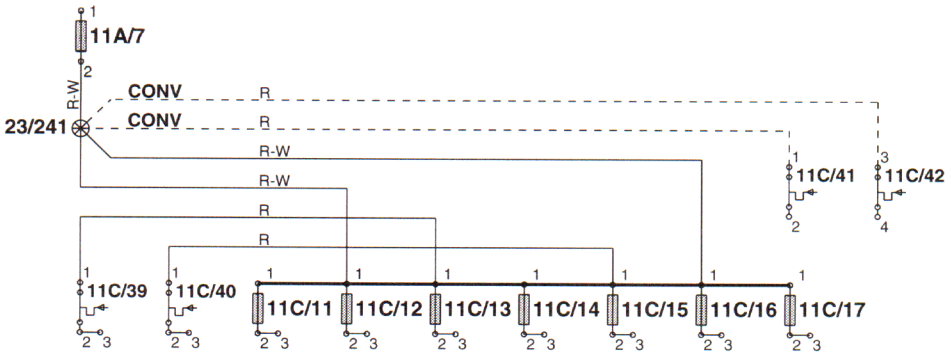

Junction points

23/242 (Left door sill cable harness, C70)
23/243 (Engine cable harness, DENSO/ME7)
23/245 (Engine compartment cable harness, DENSO/ME7)
23/246 (Engine compartment cable harness, DENSO/ME7)
23/249 (Engine compartment cable harness)

23/242 C70

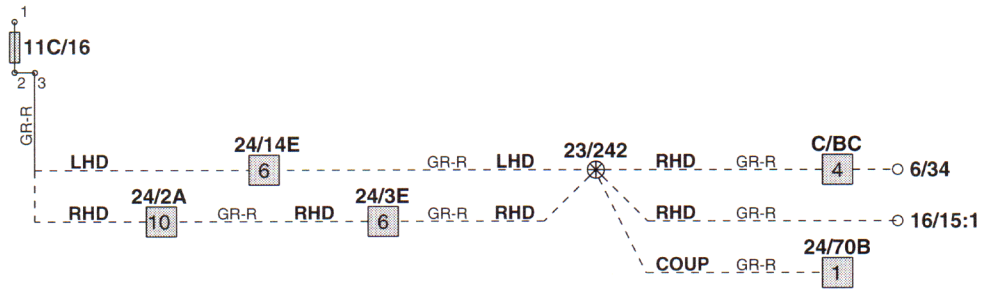

23/243 DENSO/ME7

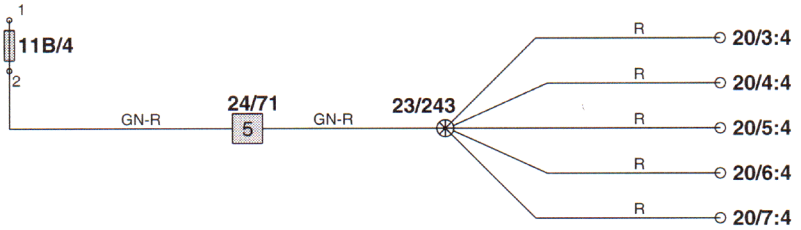

23/245 DENSO/ME7

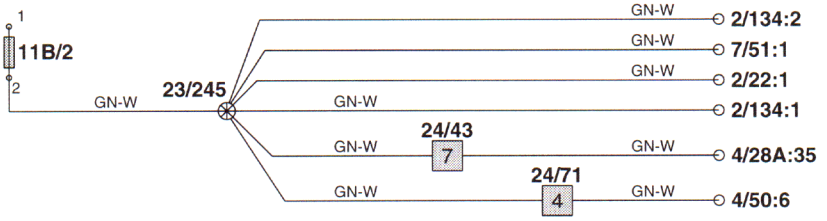

23/246 DENSO/ME7

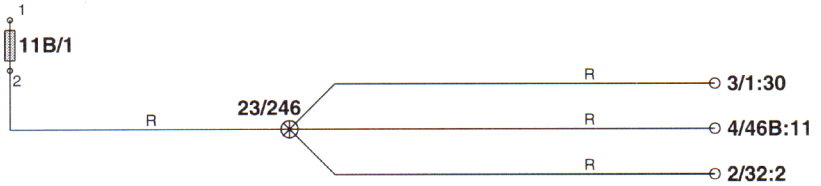

23/249

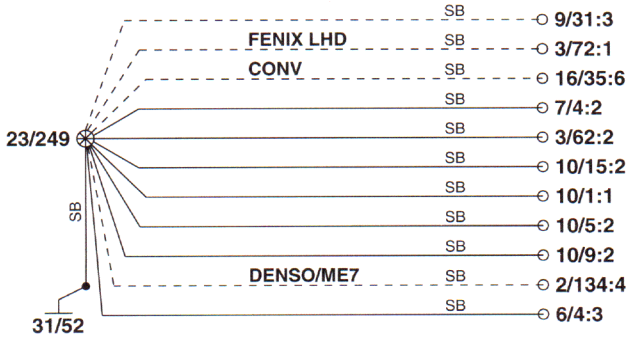

23/250 (Engine compartment cable harness, CONV)
23/251 (Engine compartment cable harness, FENIX)
23/251 (Engine compartment cable harness, FENIX 4x50 W)
23/300A (Dashboard cable harness)

23/250 CONV

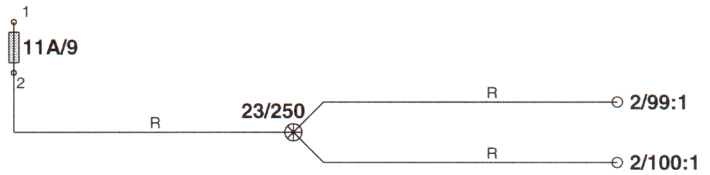

23/251 FENIX

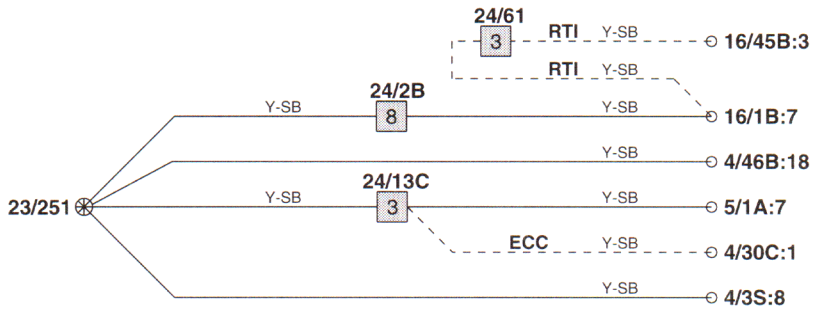

23/251 FENIX 4x50W

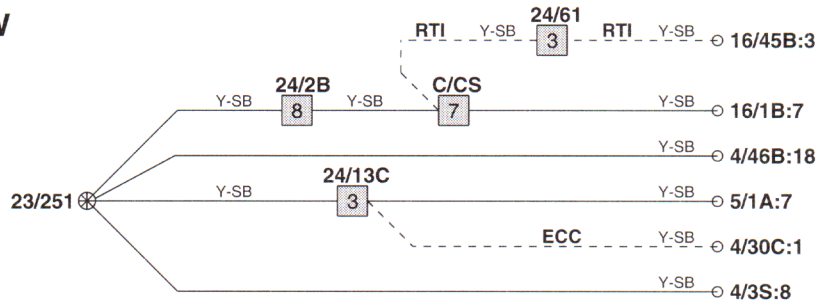

23/300A

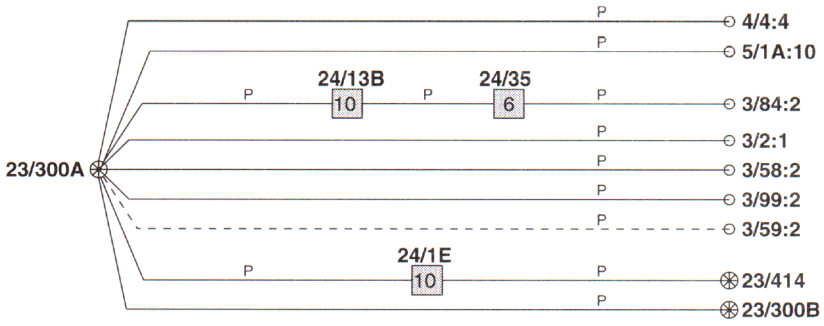

Junction points

23/300B (Dashboard cable harness)
23/301A (Dashboard cable harness)
23/301B (Dashboard cable harness)
23/302 (Dashboard cable harness)

23/300B

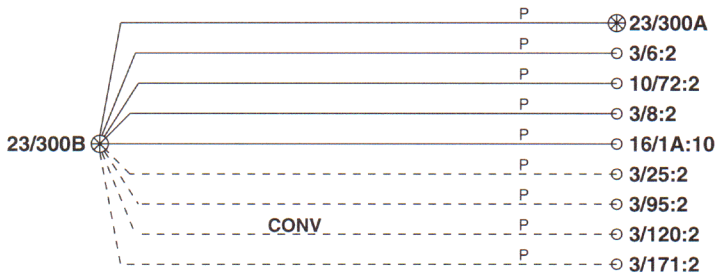

23/301A

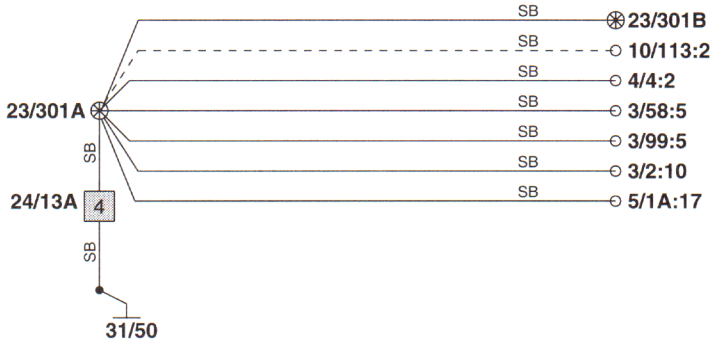

23/301B

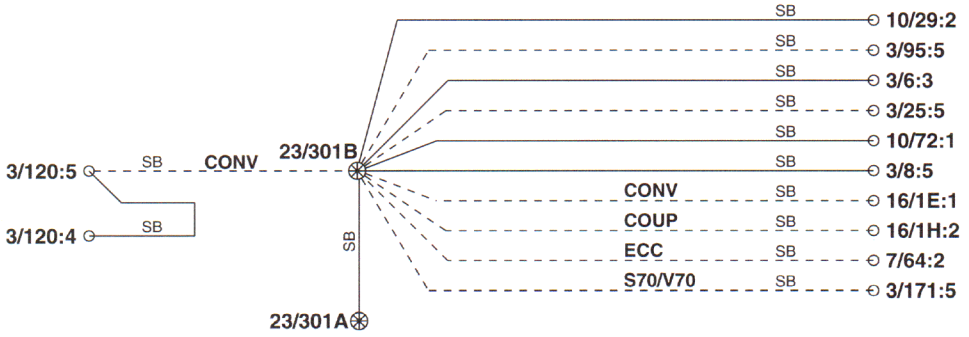

23/302

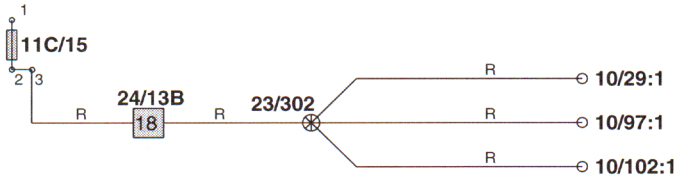

23/304 (Climate control cable harness)
23/305 (Climate control cable harness)
23/306 (Climate control cable harness, ECC)
23/307 (Climate control cable harness, ECC)

23/304

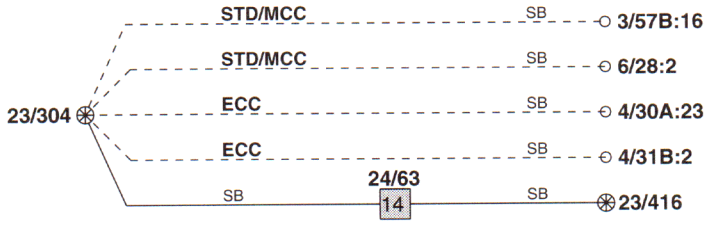

23/305

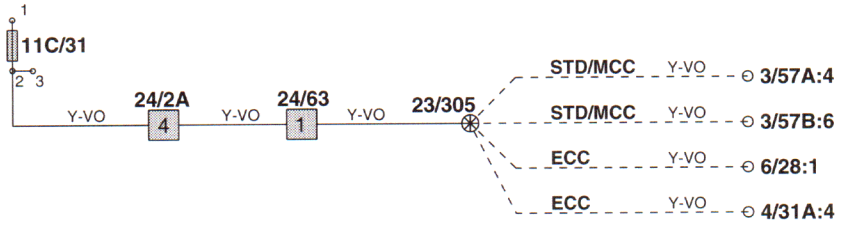

23/306
ECC

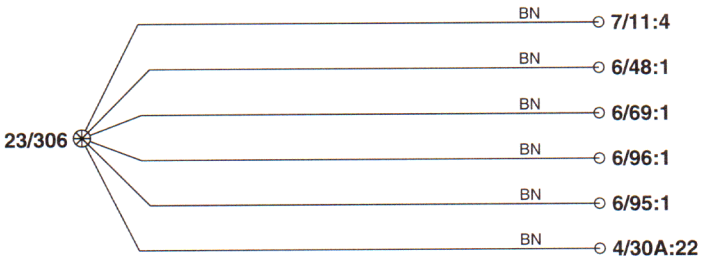

23/307
ECC

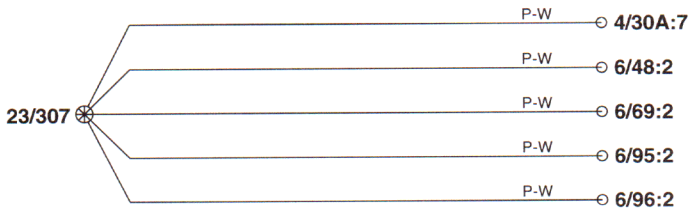

Junction points

23/311 (Dashboard cable harness, ECC)
23/313 (Climate control cable harness, STD/MCC)
23/314 (RTI cable harness, not shown)
23/315 (RTI cable harness, not shown)

23/311
ECC

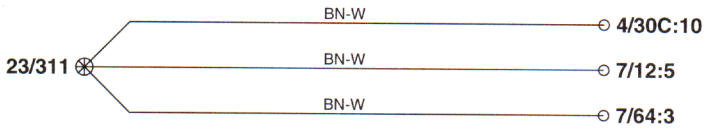

23/313
STD/MCC

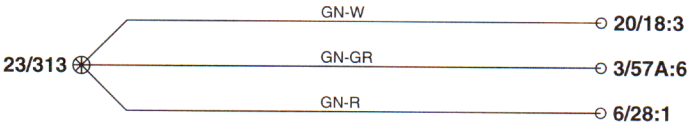

23/314
RTI

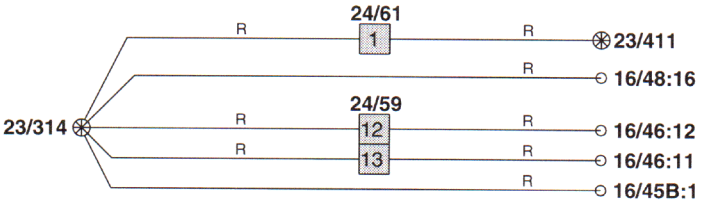

23/315
RTI

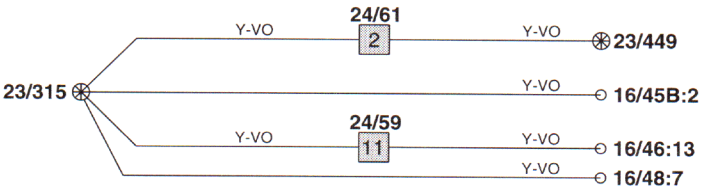

23/316 (RTI cable harness, not shown)
23/319 (Firewall cable harness, CONV)
23/320 (Instrument panel cable harness)
23/321 (Radio, 4x50 W)

23/316
RTI

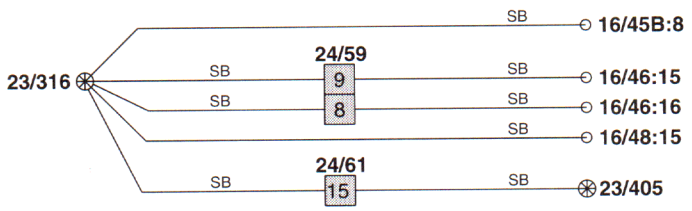

23/319
CONV

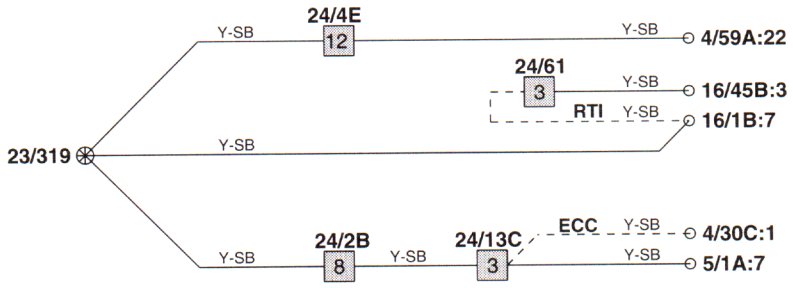

23/320

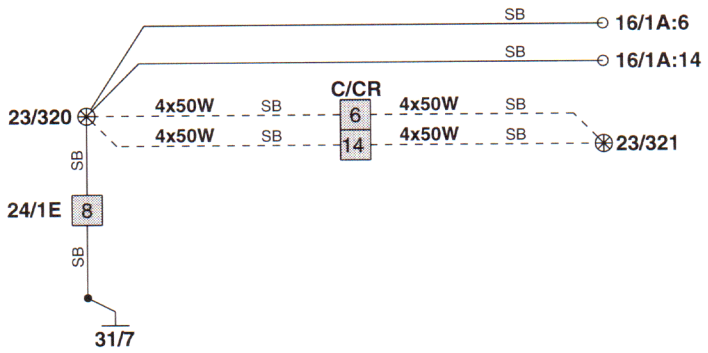

23/321
4x50W

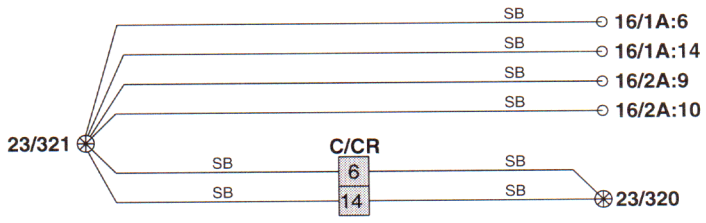

Junction points

23/322 (Radio, 4x50 W)
23/324 (Instrument panel cable harness)
23/405 (Firewall cable harness, CONV)
23/405 (Firewall cable harness, COUP/S70/V70)

23/322
4x50W

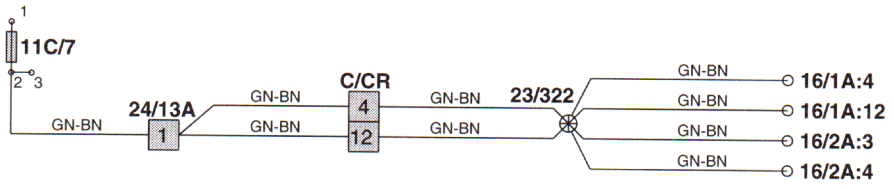

23/324

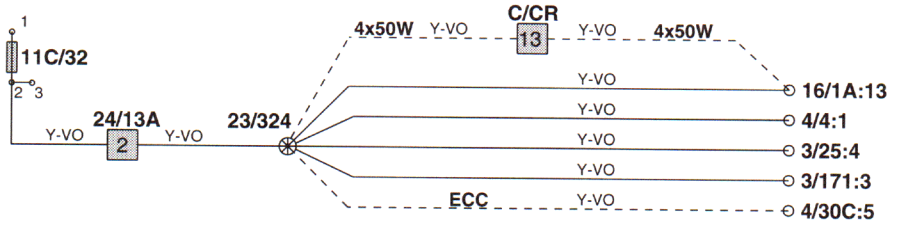

23/405
CONV

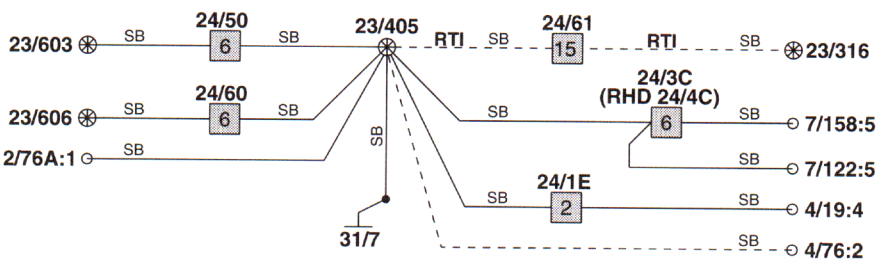

23/405
COUP/
S70/V70

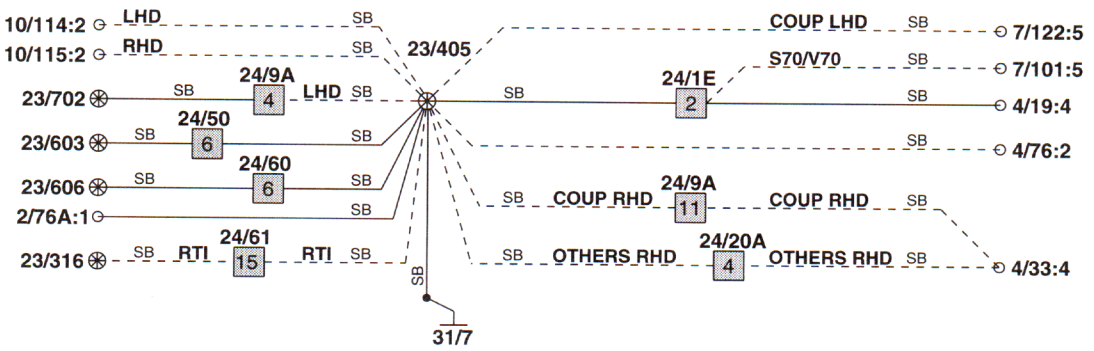

23/406 (Firewall cable harness)
23/408 (Firewall cable harness, S70/V70)
23/409 (Firewall cable harness)
23/411 (Firewall cable harness, CONV)

23/406

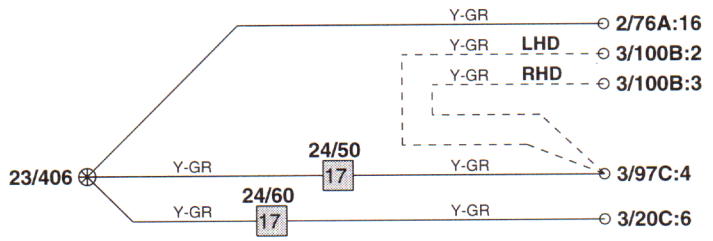

23/408 S70/V70

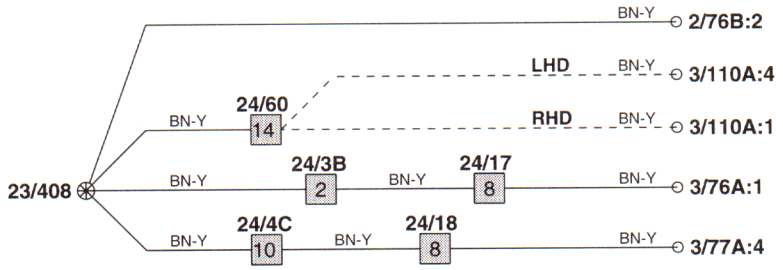

23/409

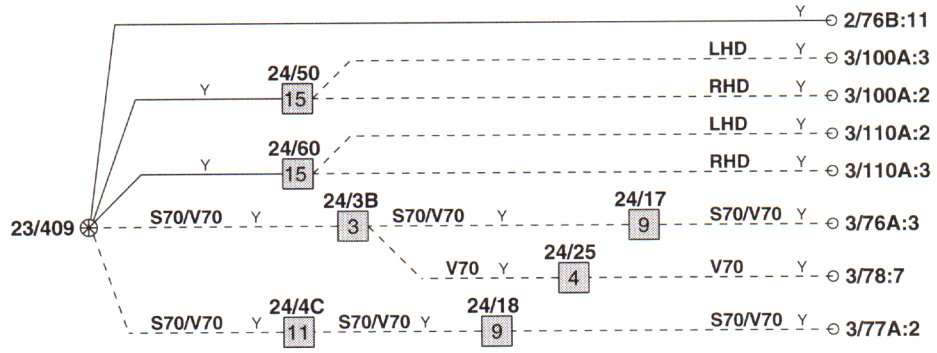

23/411 CONV

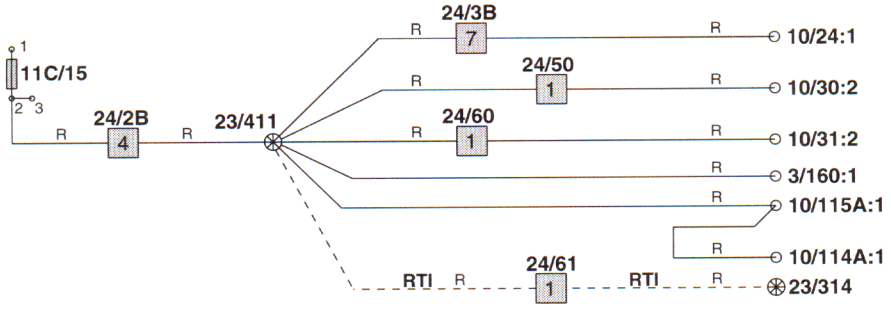

23/411 (Firewall cable harness, COUP/S70/V70)
23/412 (Firewall cable harness, CONV)
23/412 (Firewall cable harness, COUP/S70/V70)
23/414 (Firewall cable harness)

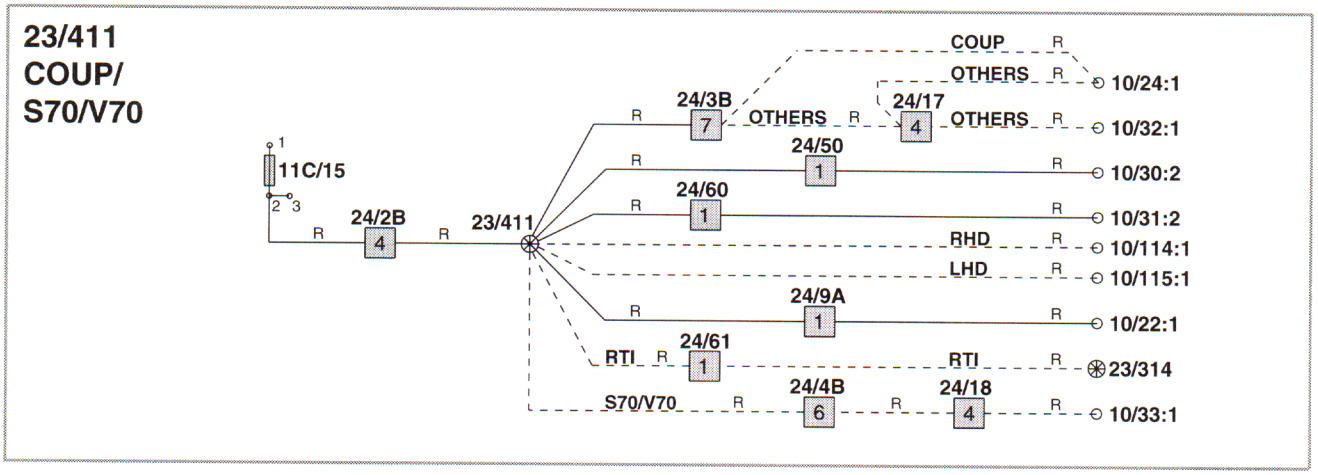

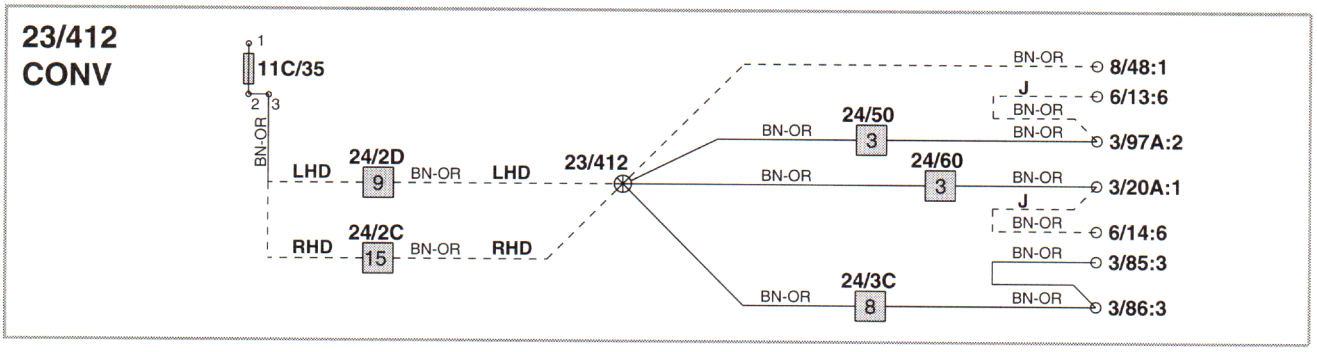

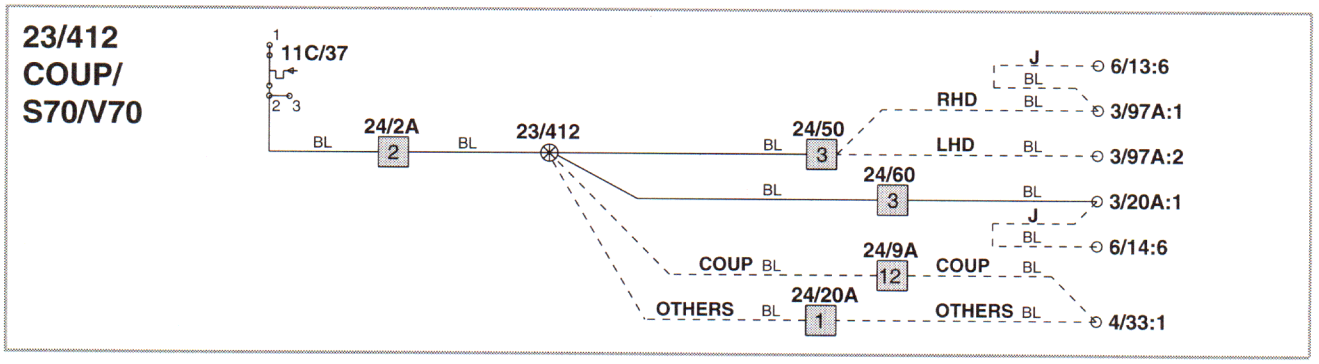

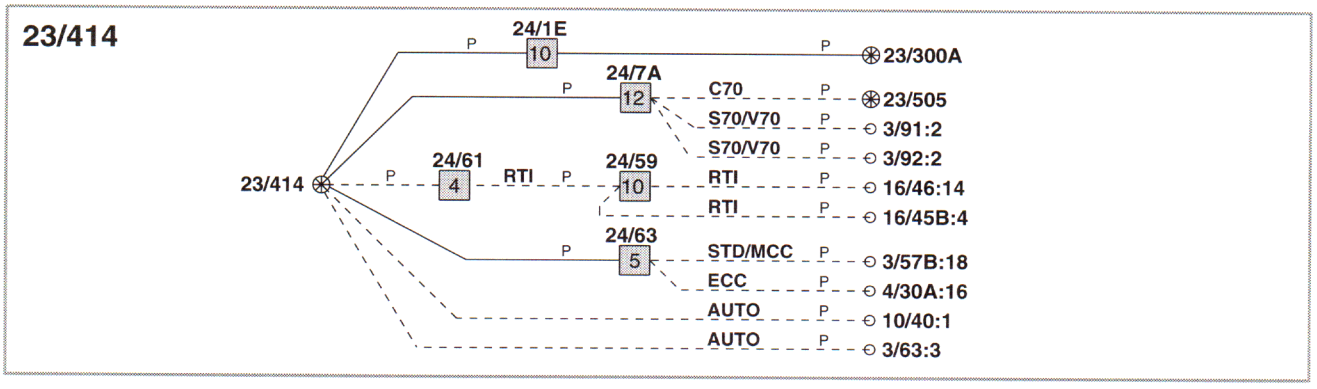

23/416 (Firewall cable harness, CONV)
23/416 (Firewall cable harness, COUP/S70/V70)
23/417 (Left door sill cable harness V70)
23/421 (Firewall cable harness)

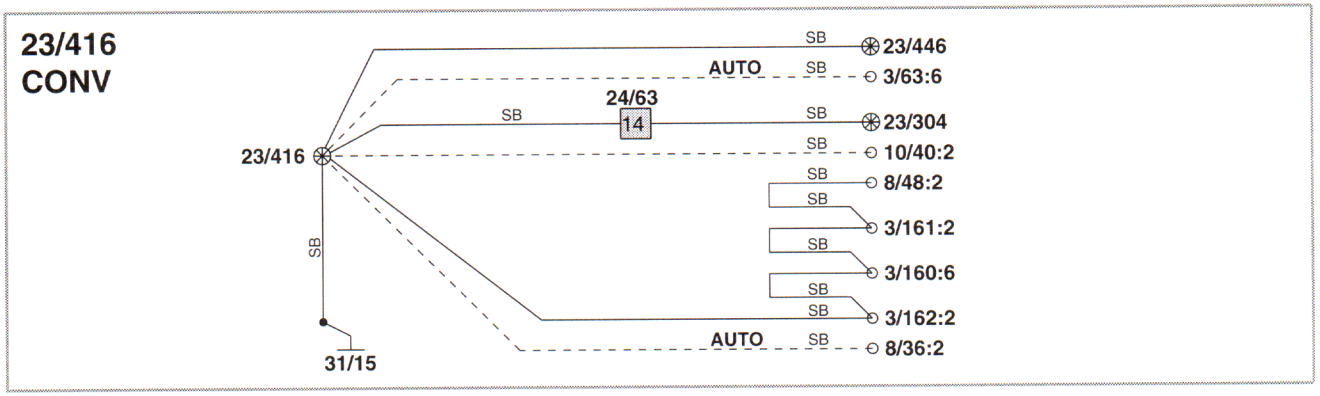

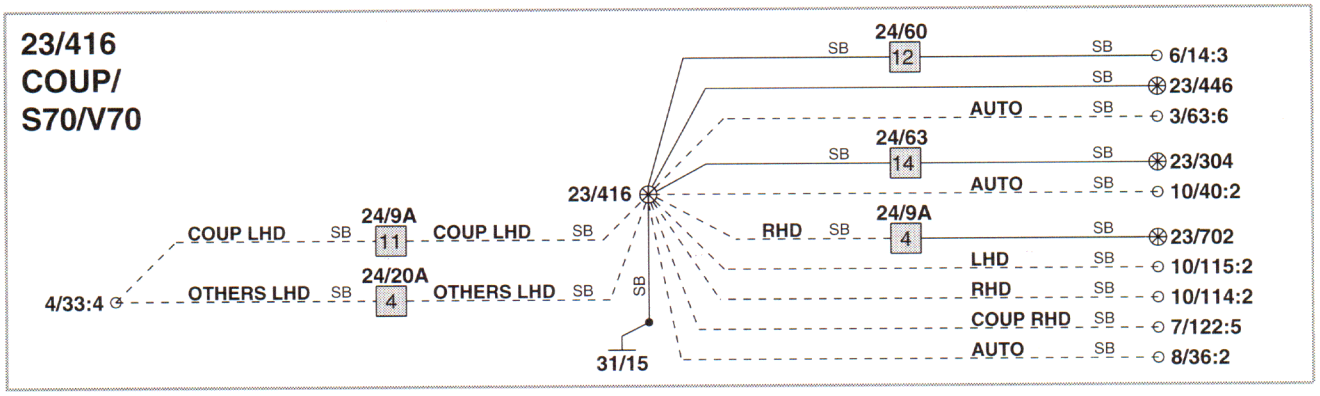

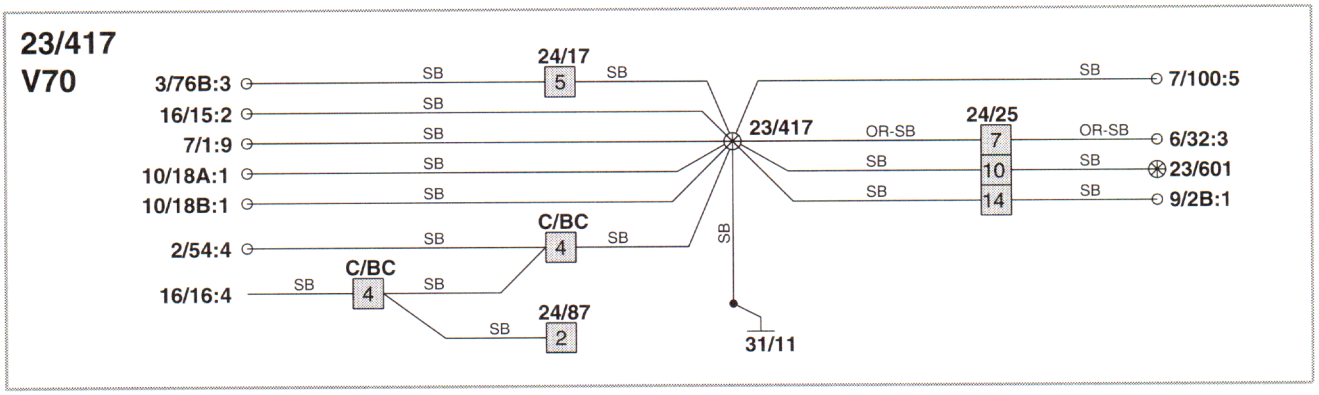

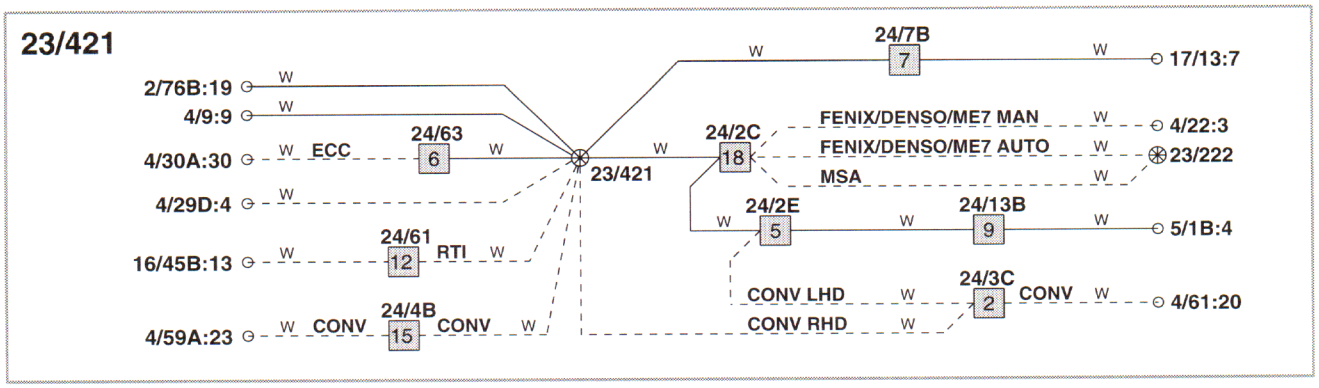

Junction points

23/422 (Left door sill cable harness, C70)
23/422 (Left door sill cable harness, S70)
23/424 (Firewall cable harness)
23/426 (Left door sill cable harness, CONV)

23/422 C70

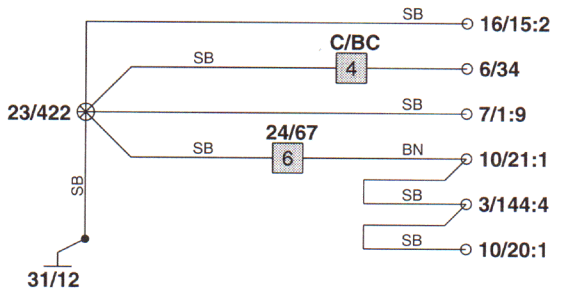

23/422 S70

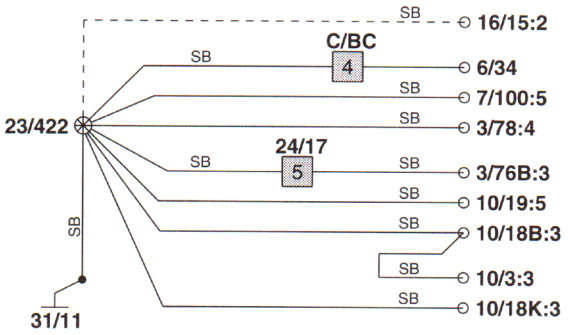

23/424

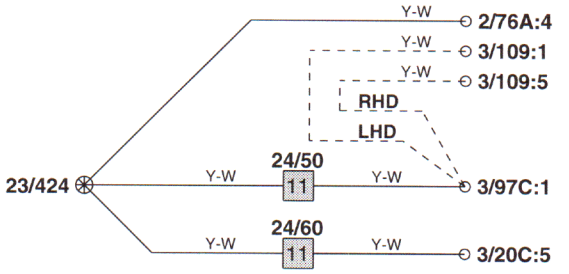

23/426 CONV

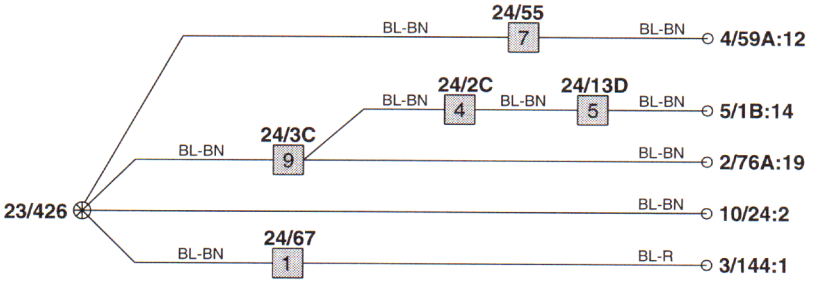

23/428 (Firewall cable harness C70)
23/434 (Left door sill cable harness, C70)
23/435 (Left door sill cable harness, C70)
23/437 (Right door sill cable harness CONV)

23/428
C70

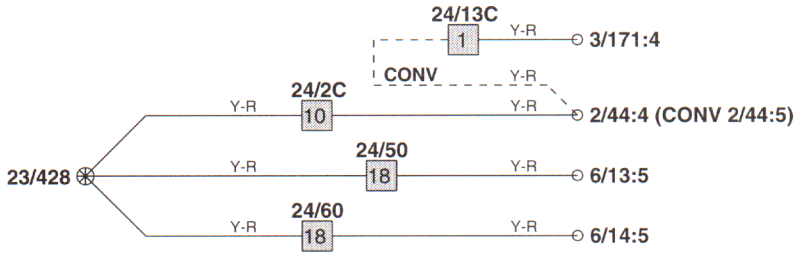

23/434
C70

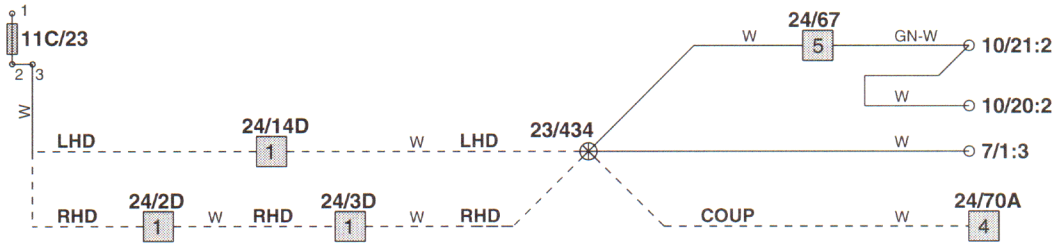

23/435
C70

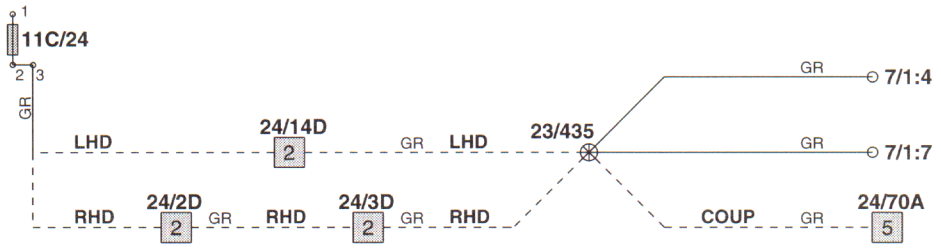

23/437
CONV

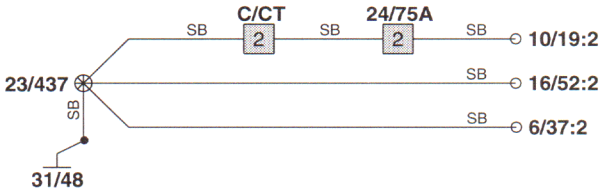

23/440 (Engine compartment cable harness, FENIX/MSA RTI)
23/441 (Right door sill cable harness CONV)
23/442 (Right door sill cable harness CONV)
23/443 (Right door sill cable harness CONV)

23/440 FENIX/MSA RTI

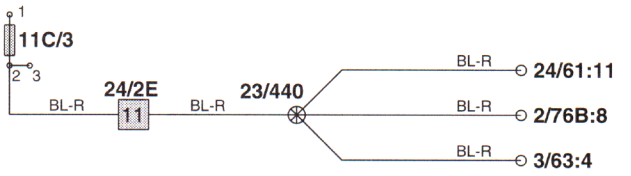

23/441 CONV

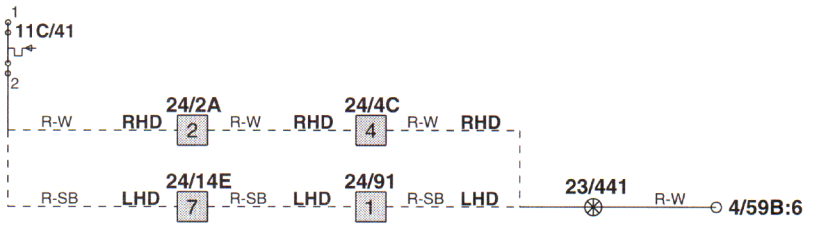

23/442 CONV

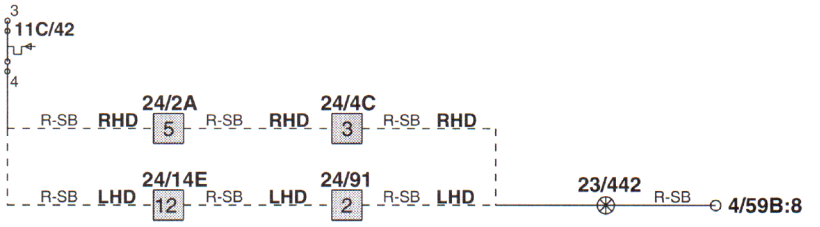

23/443 CONV

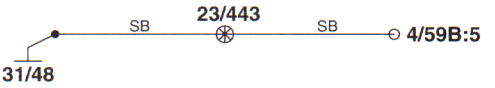

23/444 (Right door sill cable harness CONV)
23/445 (Left door sill cable harness, CONV)
23/446 (Firewall cable harness)
23/449 (Firewall cable harness, CONV)
23/449 (Firewall cable harness, COUP/S70/V70)

23/444 CONV

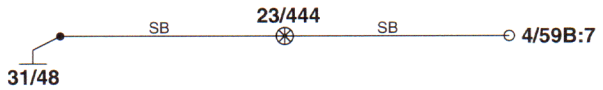

23/445 CONV

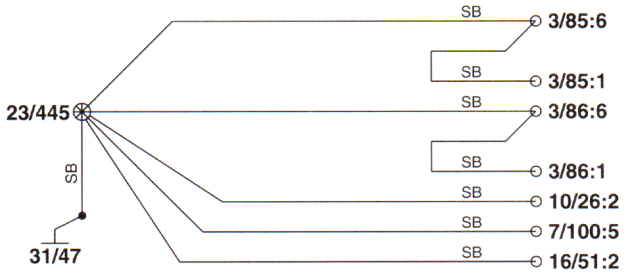

23/446

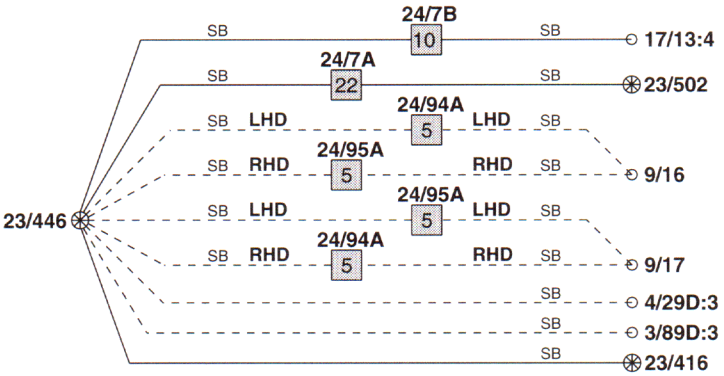

23/449 CONV

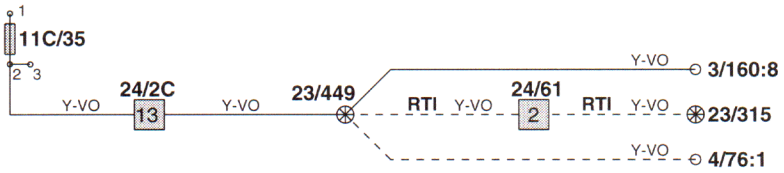

23/449 COUP/ S70/V70

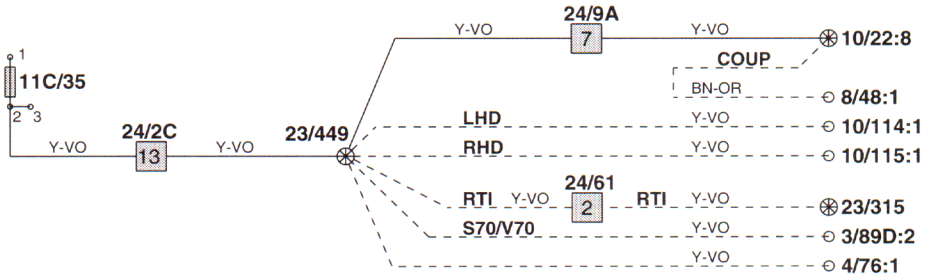

23/450 (Cable harness soft-top)
23/451 (Cable harness soft-top)
23/502 (Tunnel cable harness)
23/503 (Tunnel cable harness)
23/505 (Tunnel cable harness, C70)

23/450
CONV

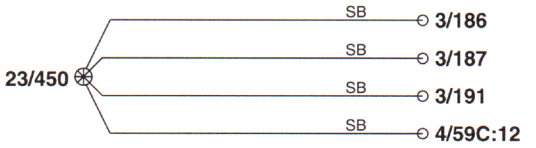

23/451
CONV

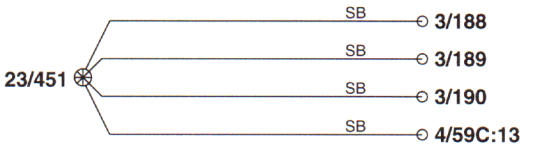

23/502

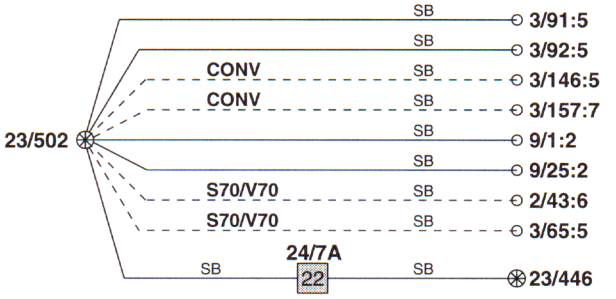

23/503

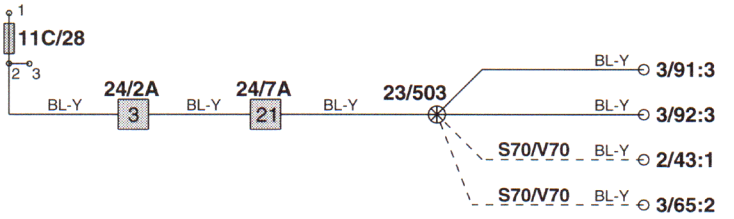

23/505
C70

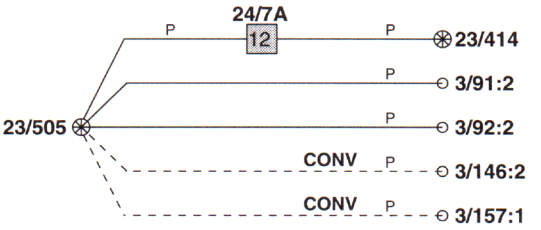

23/601 (Tailgate cable harness, V70)
23/603 (Driver door cable harness)
23/604 (Driver door cable harness)
23/605 (Passenger door cable harness)

23/601
V70

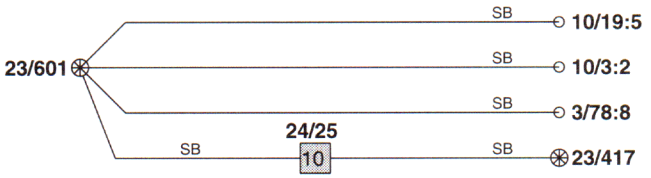

23/603

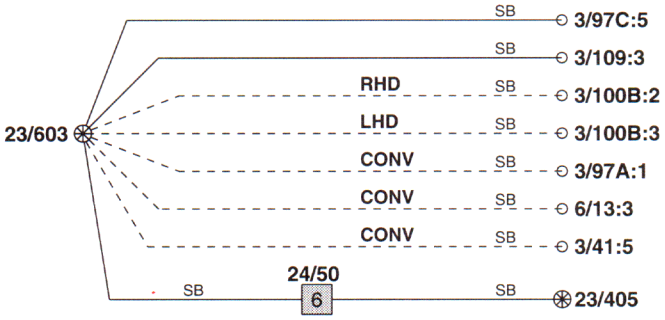

23/604

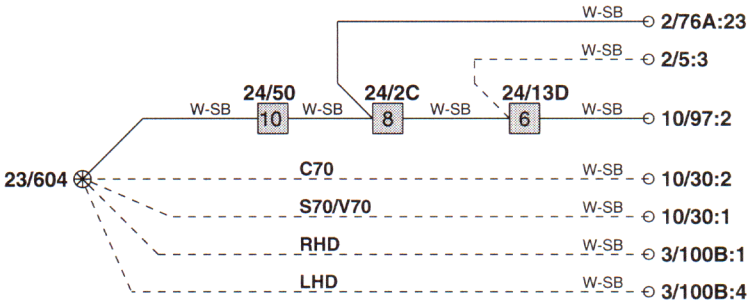

23/605

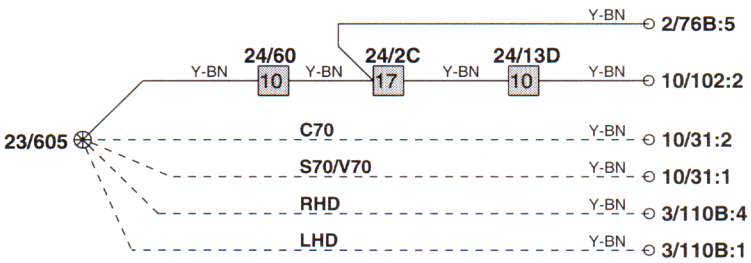

Junction points

23/606 (Passenger door cable harness)
23/609 (Driver door cable harness, COUP/S70/V70)
23/702 (Roof cable harness, COUP)
23/702 (Roof cable harness, S70/V70)

23/606

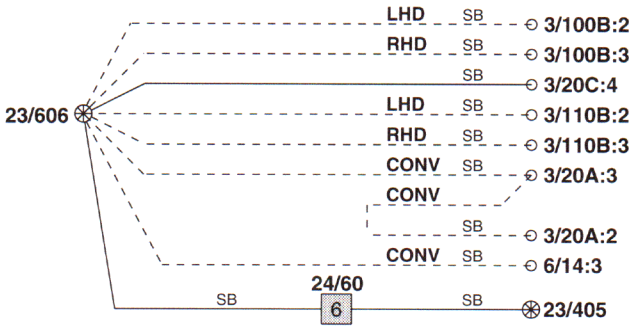

23/609
COUP/S70/V70

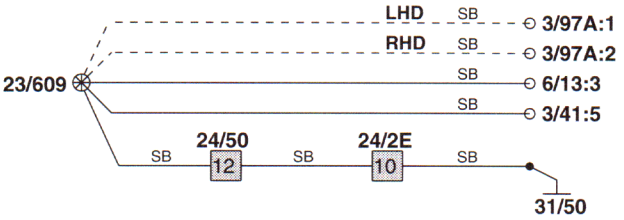

23/702
COUP

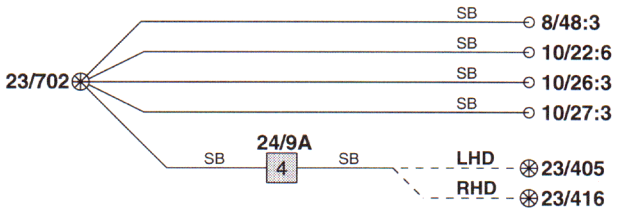

23/702
S70/V70

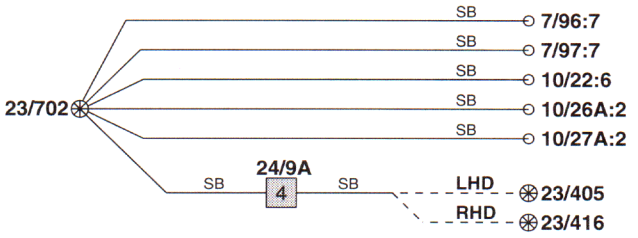

Routing of cable harnesses in the car

Firewall cable harness

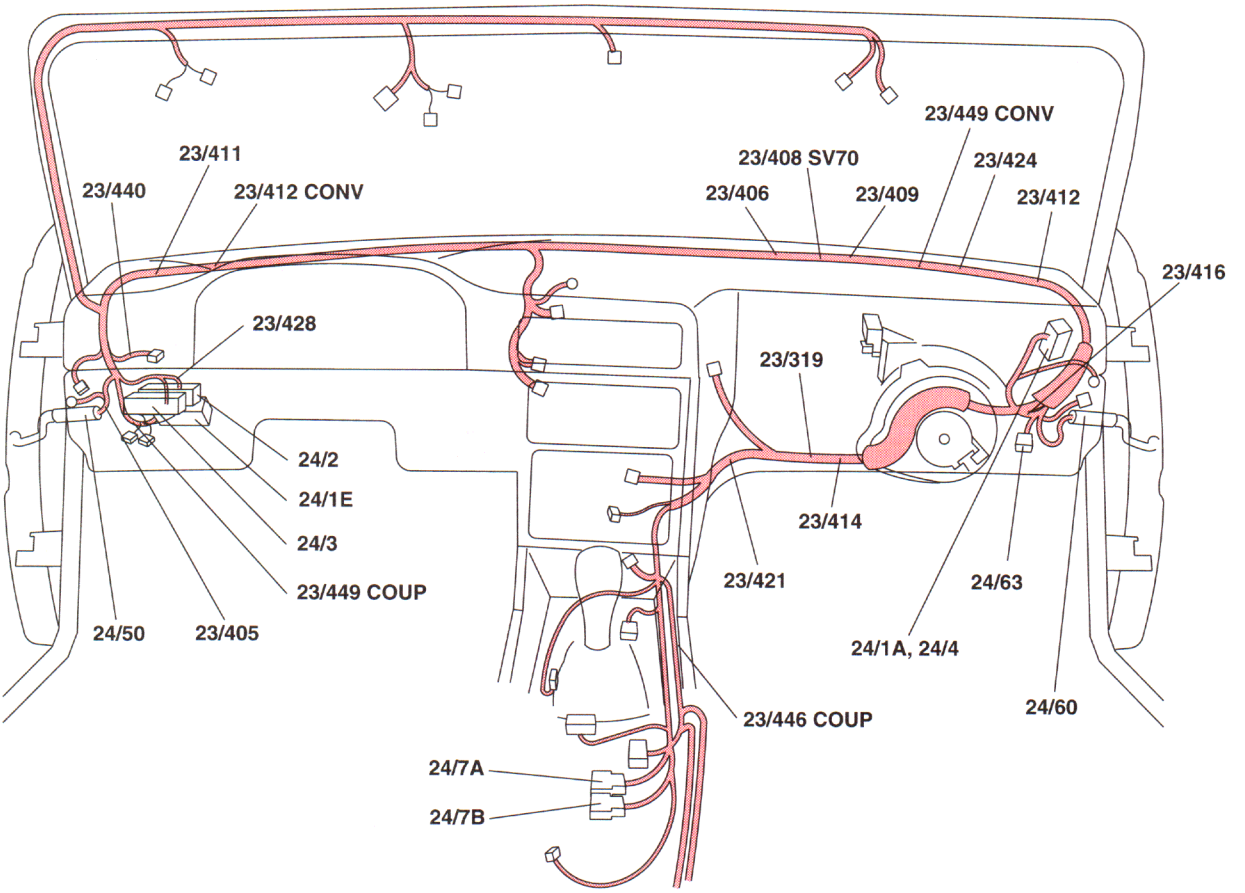

Instrument panel cable harness

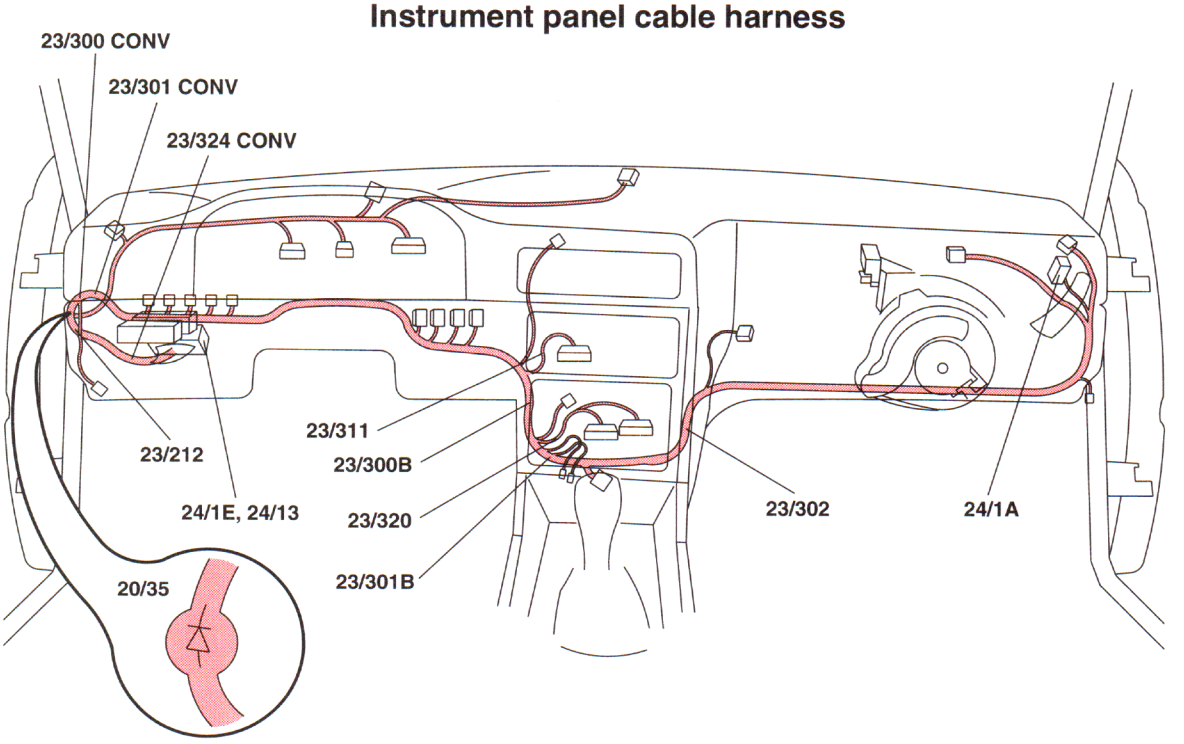

Climate control cable harness

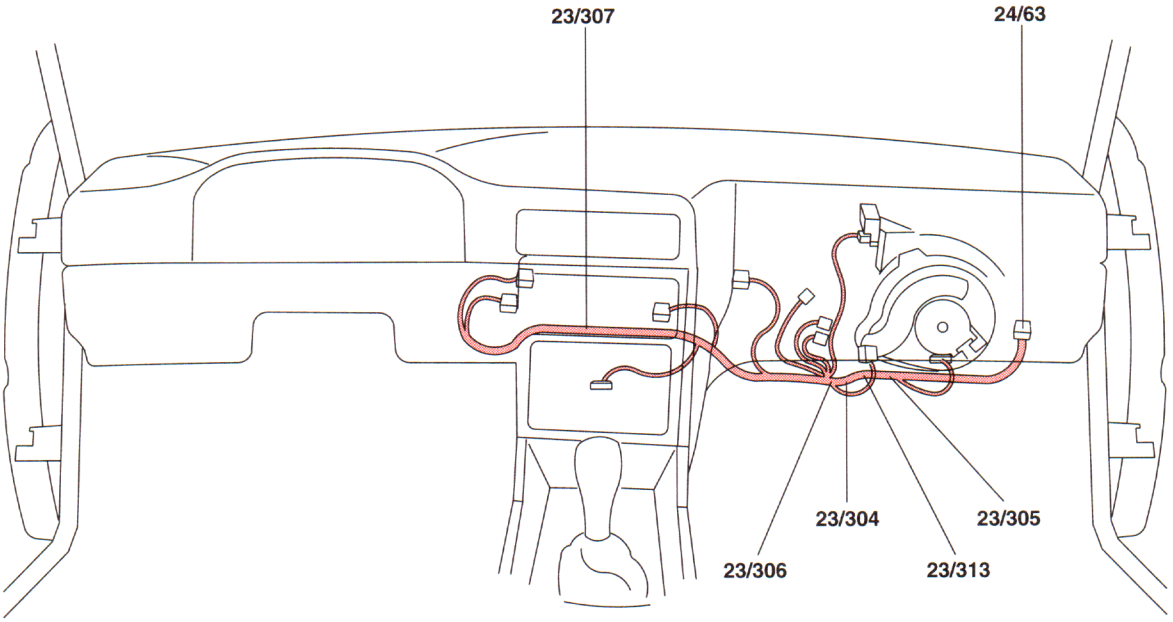

Tunnel cable harness

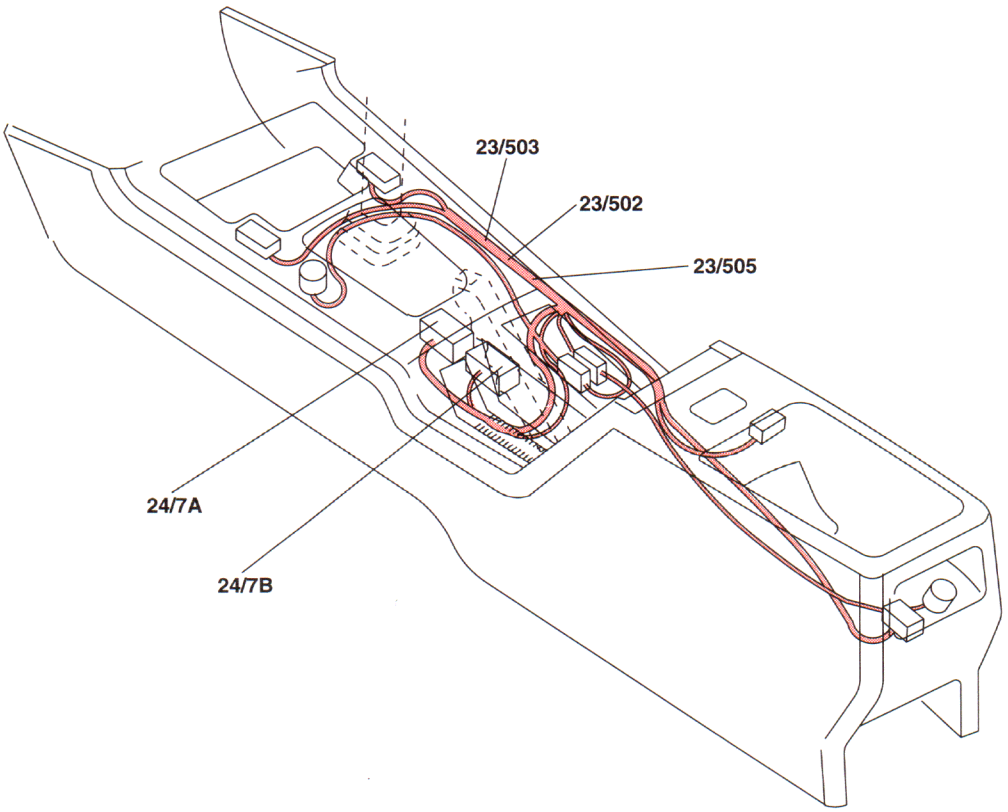

Left door sill cable harness, C70

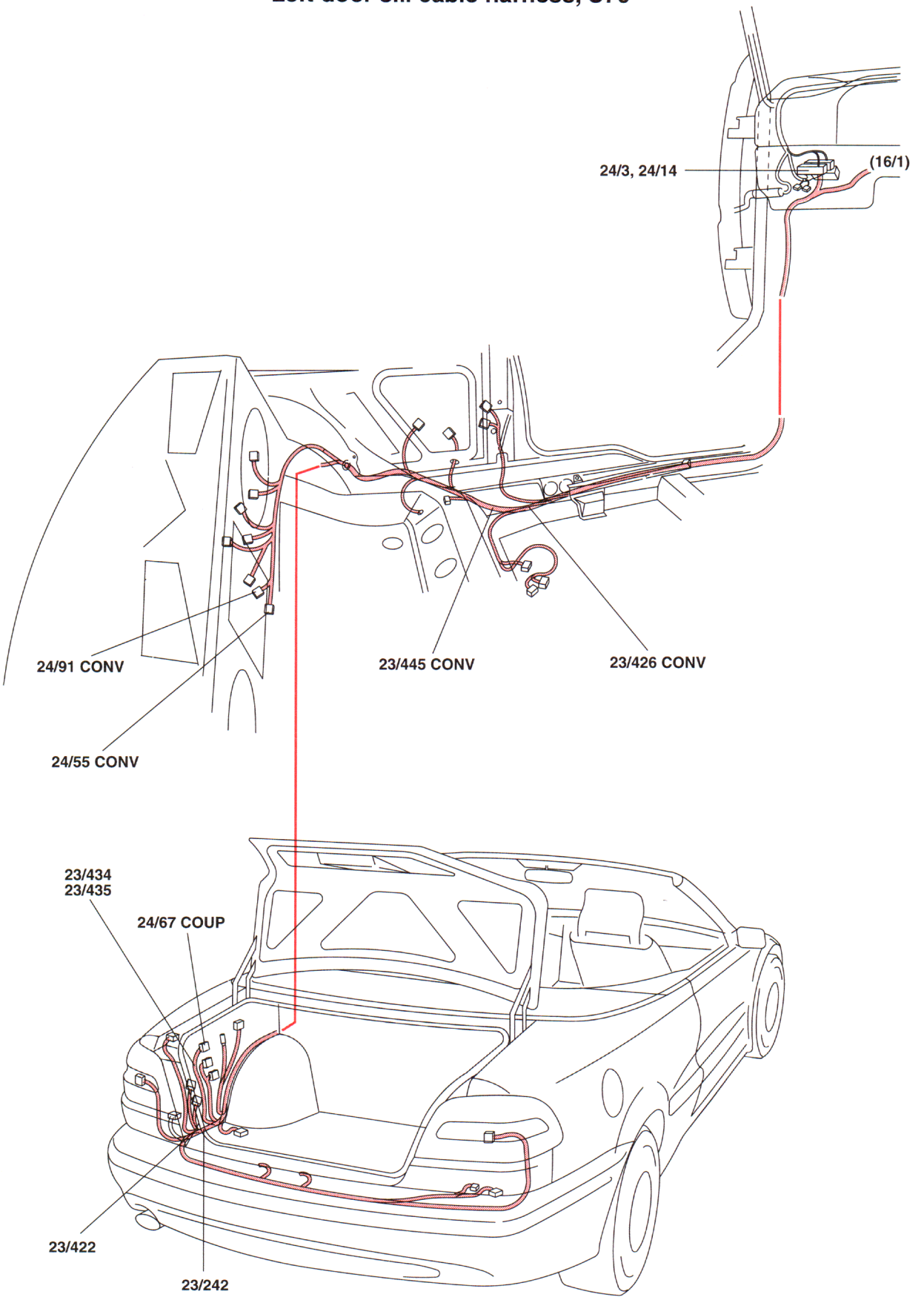

Left door sill cable harness, S70/V70

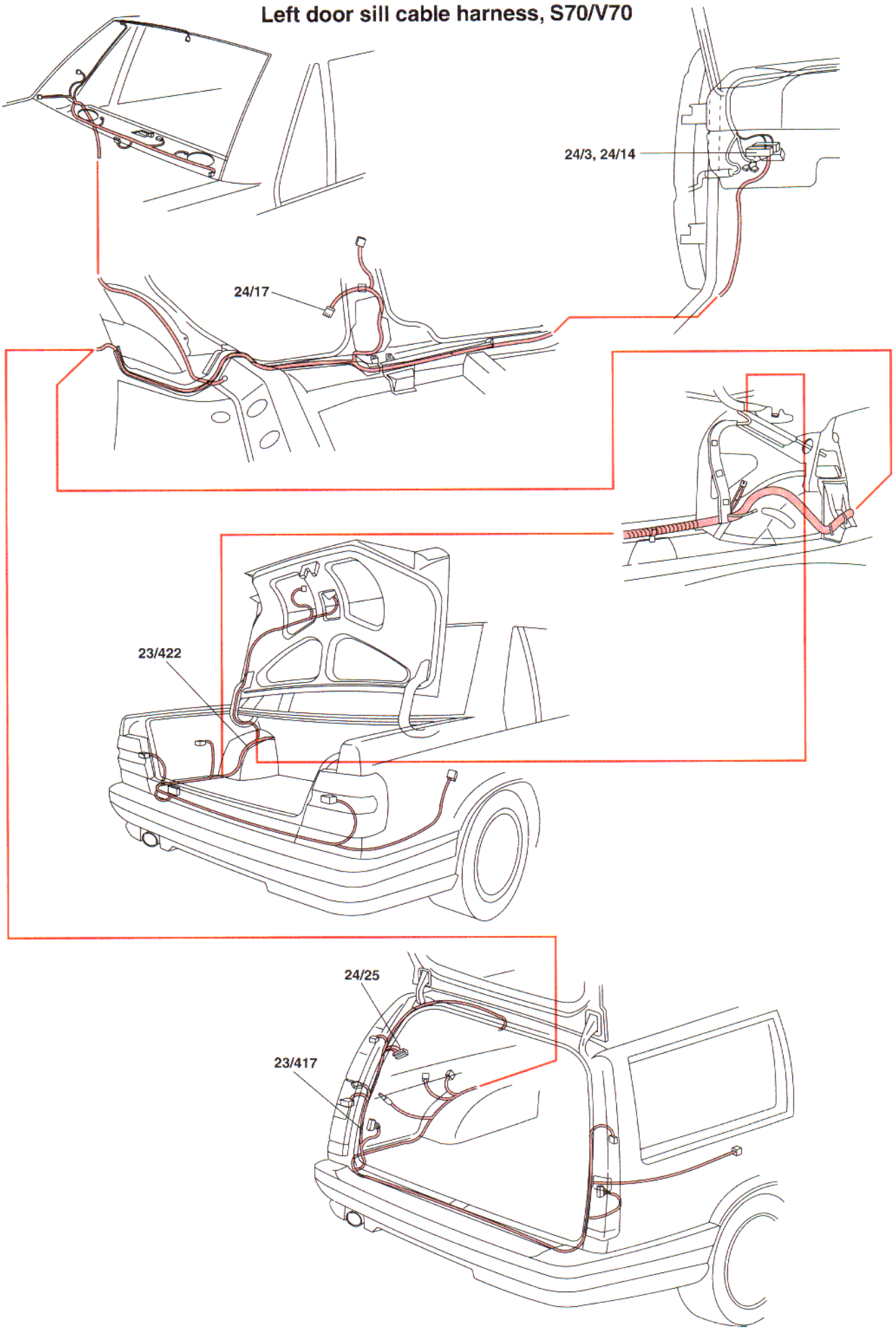

Right door sill cable harness, C70

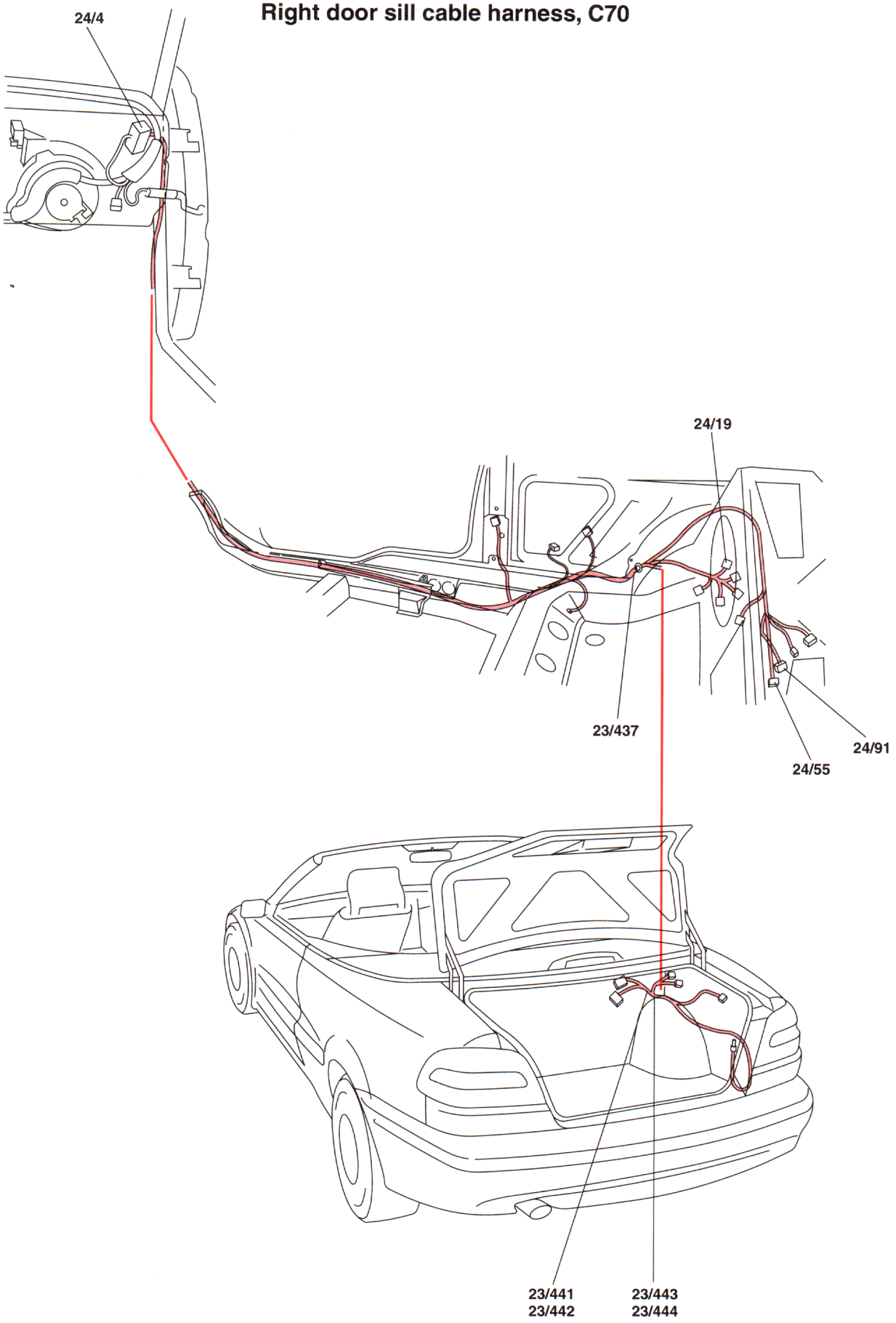

Right door sill cable harness, S70/V70

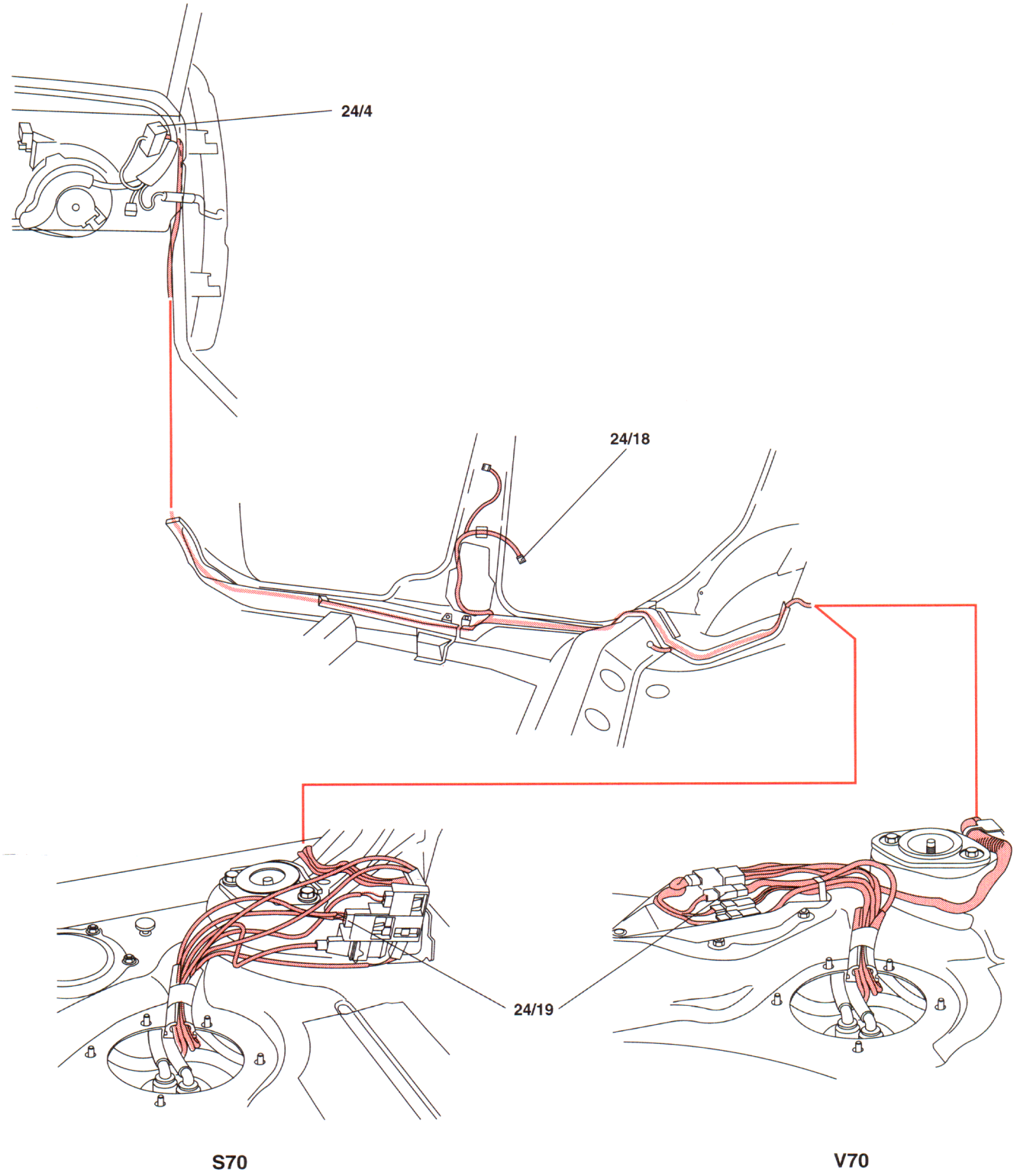

Soft-top cable harness

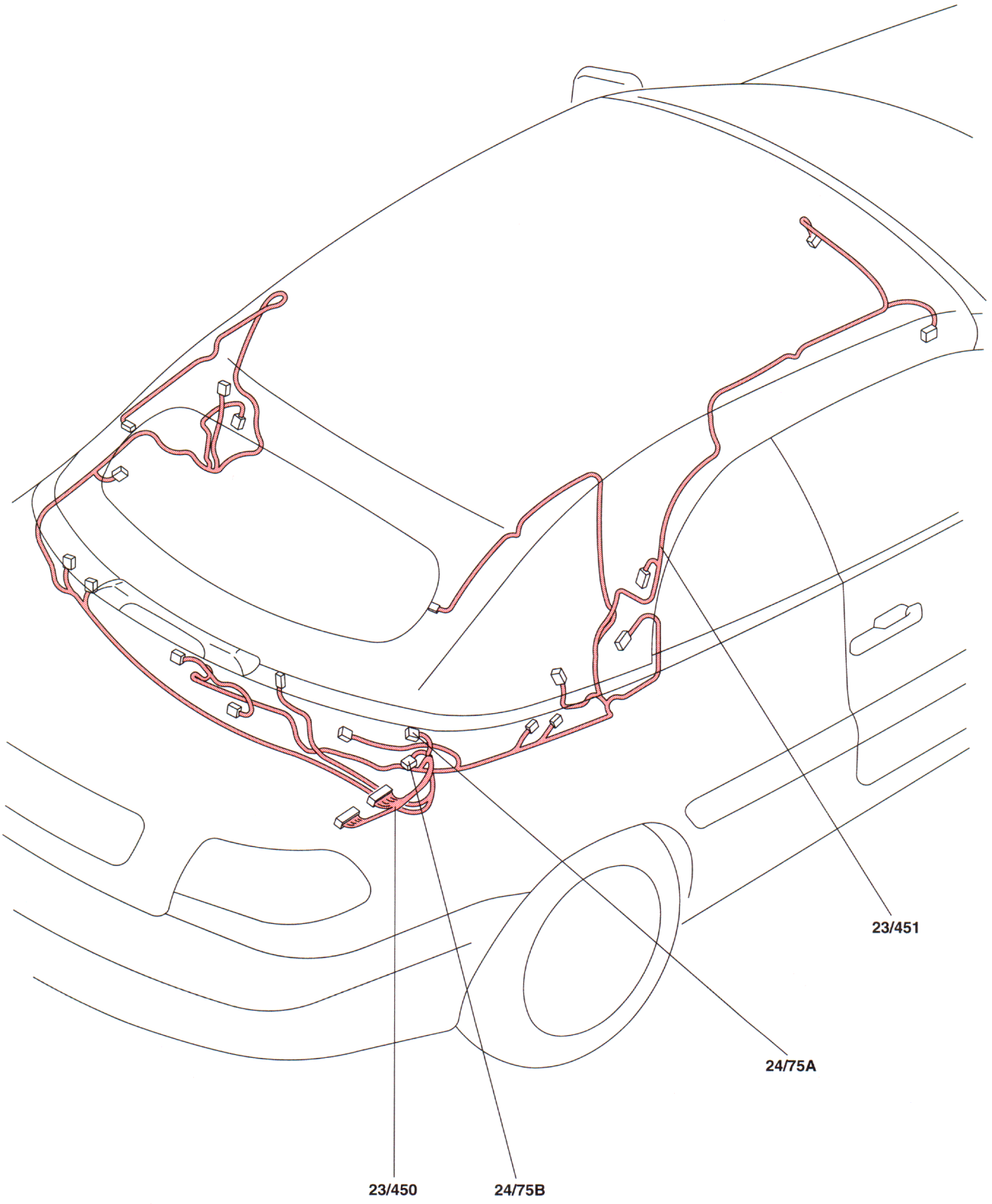

Roof cable harness, C70 coupé

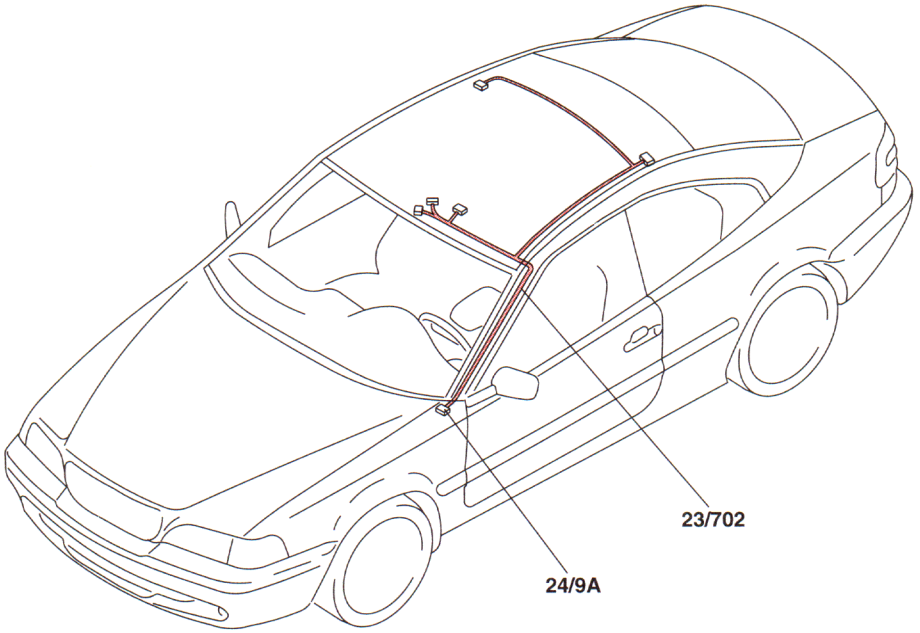

Power sunroof cable harness

Roof cable harness, S70/V70

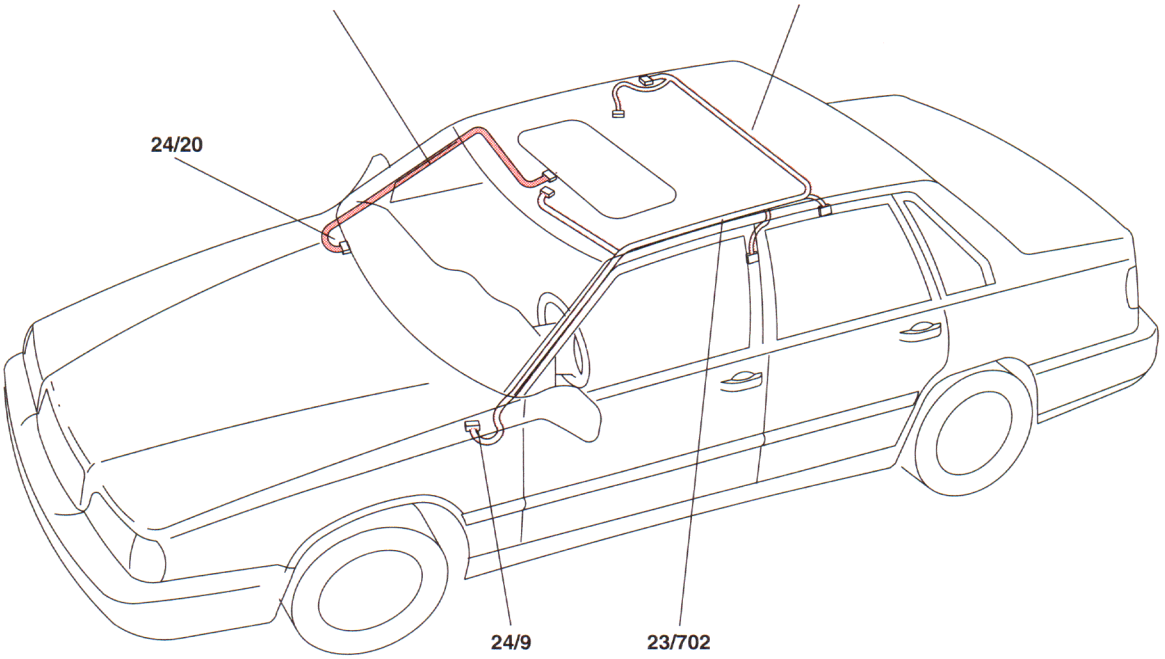

Routing of cable harnesses in the car

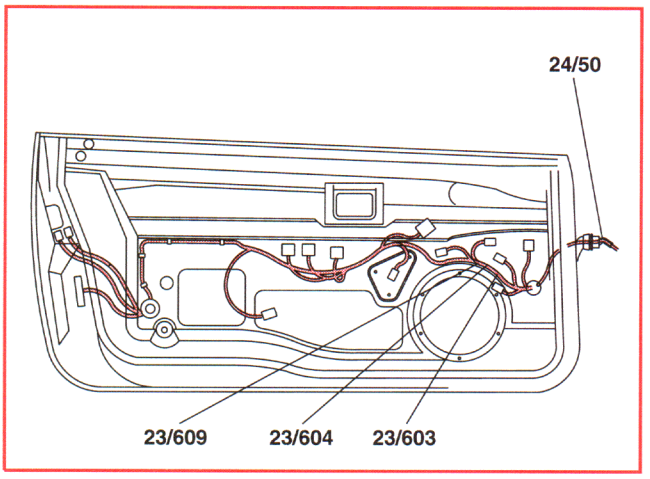

Driver door cable harness

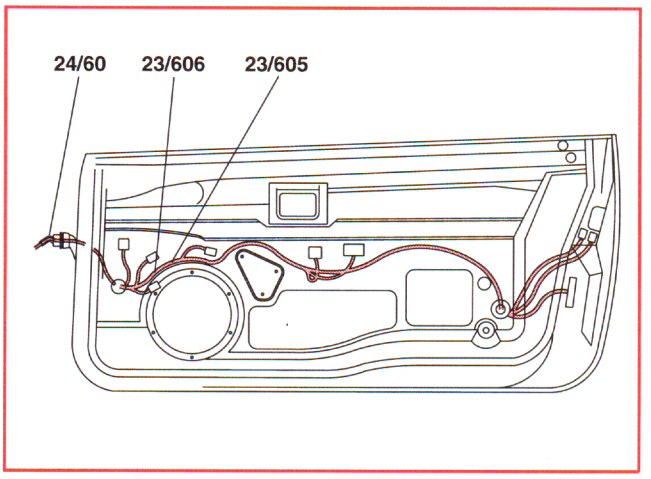

Passenger door cable harness

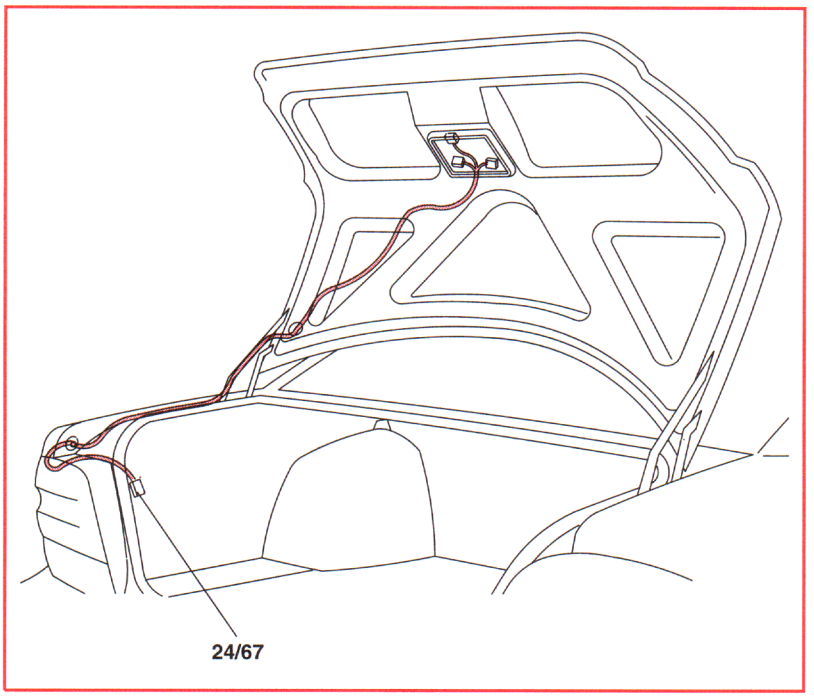

Trunk lid cable harness

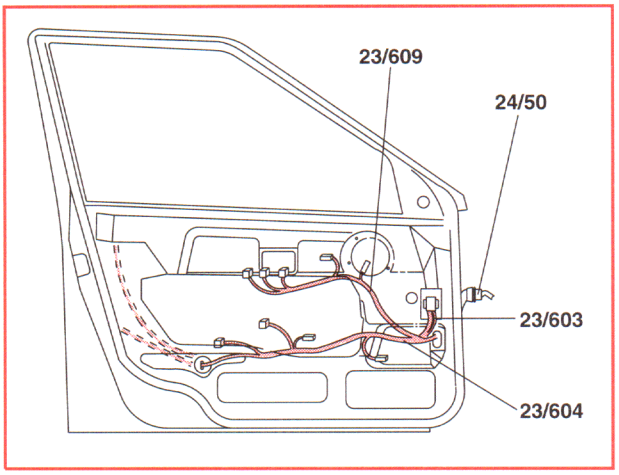

Driver door cable harness

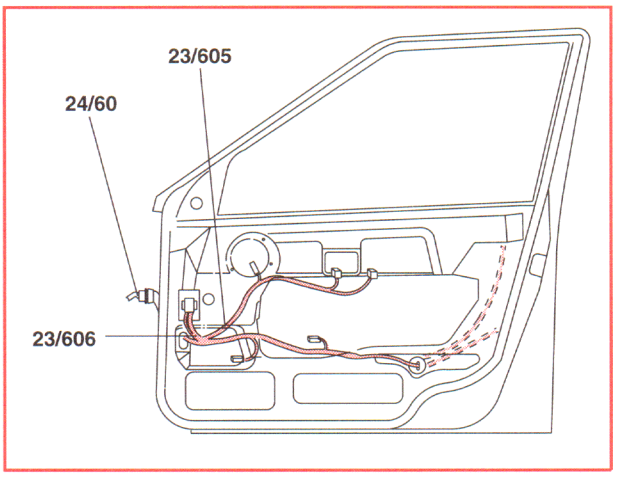

Passenger door cable harness

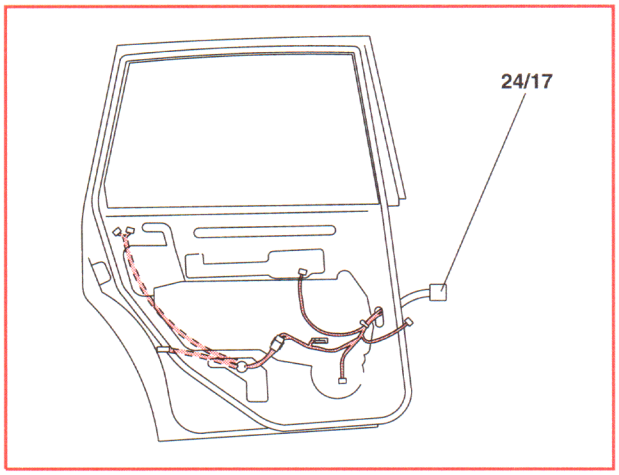

Left rear door cable harness

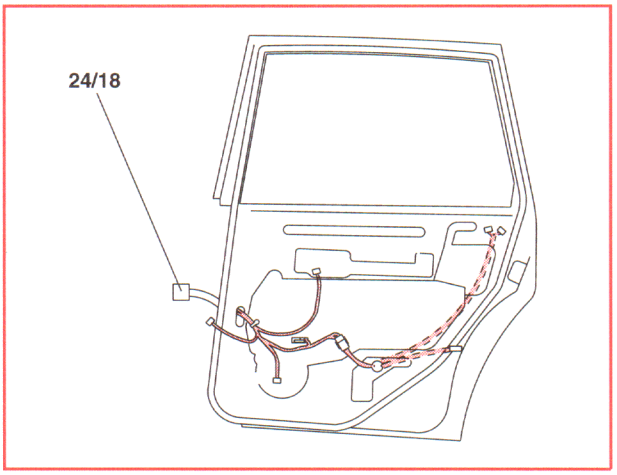

Right rear door cable harness

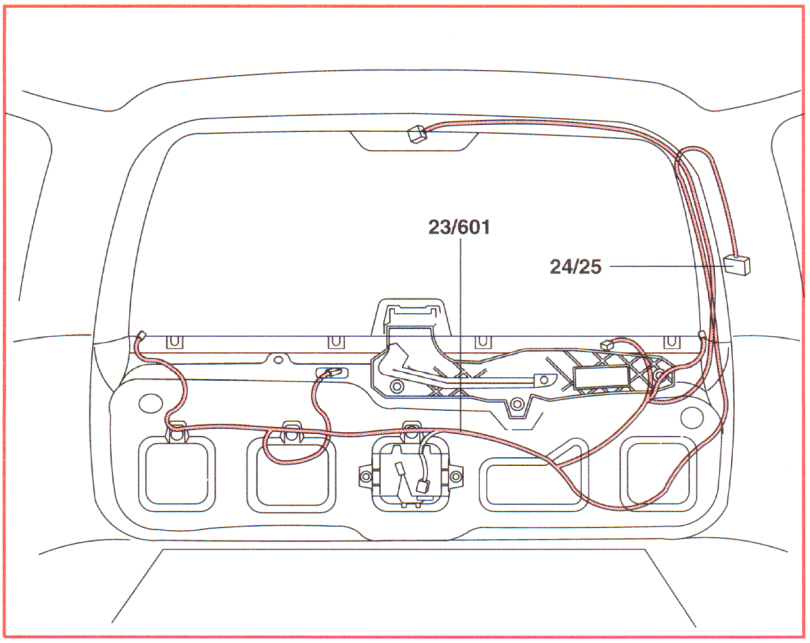

Trunk lid cable harness

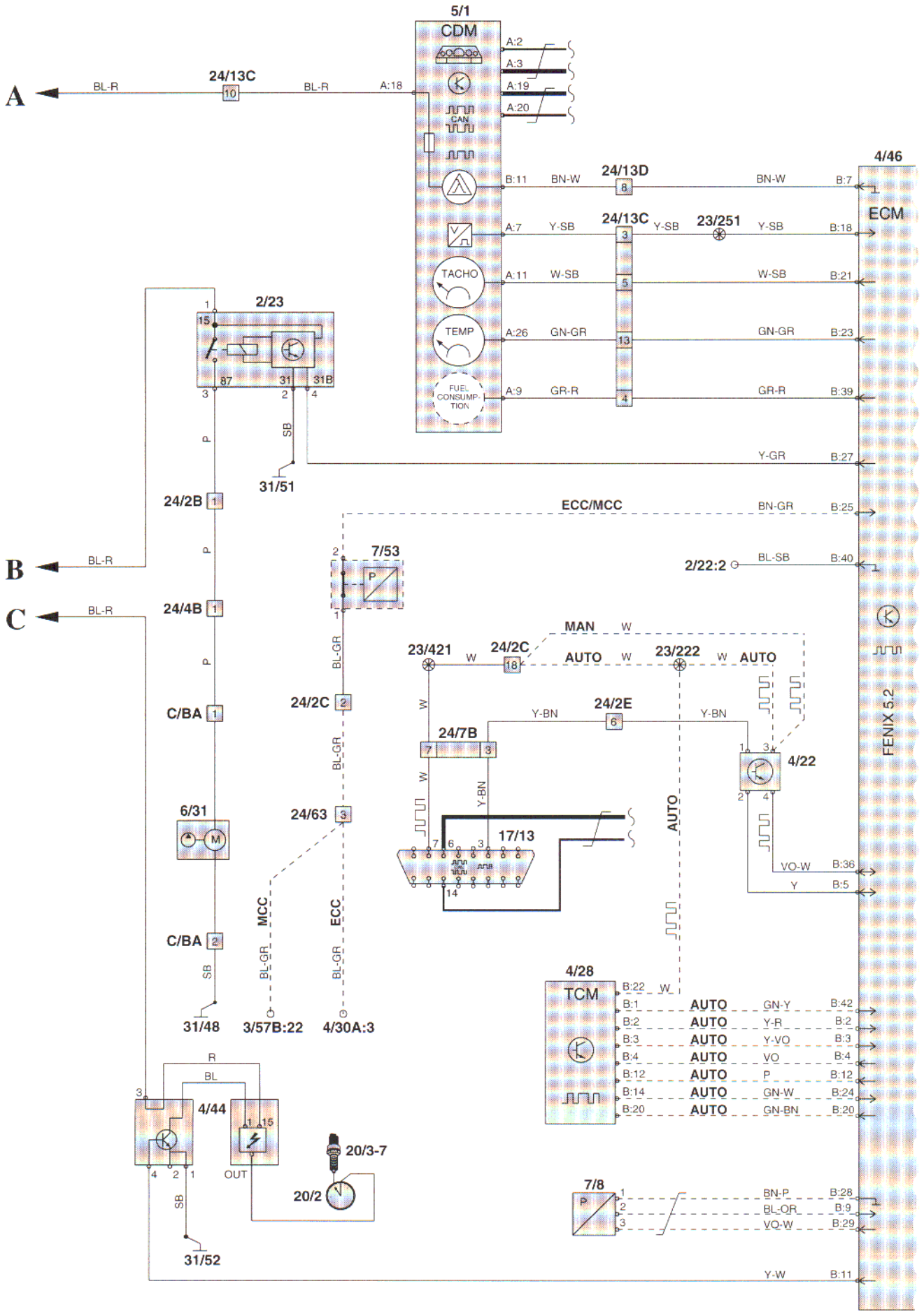
5/1
CDM
A:2
A:3
A:19
A:20
CAN
A
BL-R
24/13C
10
BL-R
A:18
B:11
BN-W
24/13D
8
BN-W
B:7
4/46
ECM
A:7
Y-SB
24/13C
3
Y-SB
23/251
Y-SB
B:18
TACHO
A:11
W-SB
5
W-SB
B:21
TEMP
A:26
GN-GR
13
GN-GR
B:23
FUEL CONSUMP-TION
A:9
GR-R
4
GR-R
B:39
2/23
15
87
31
31B
3
2
4
P
SB
31/51
Y-GR
B:27
24/2B
1
ECC/MCC
BN-GR
B:25
B
BL-R
7/53
P
2/22:2
BL-SB
B:40
C
BL-R
24/4B
1
MAN
W
23/421
W
24/2C
18
AUTO
W
23/222
W
AUTO
BL-GR
24/2C
2
W
24/2E
6
Y-BN
Y-BN
C/BA
1
24/7B
7
3
4/22
W
Y-BN
6/31
M
24/63
3
17/13
AUTO
VO-W
B:36
Y
B:5
MCC
ECC
C/BA
2
SB
BL-GR
BL-GR
4/28
TCM
B:22
W
B:1
AUTO
GN-Y
B:42
B:2
AUTO
Y-R
B:2
B:3
AUTO
Y-VO
B:3
B:4
AUTO
VO
B:4
B:12
AUTO
P
B:12
B:14
AUTO
GN-W
B:24
B:20
AUTO
GN-BN
B:20
31/48
3/57B:22
4/30A:3
R
BL
4/44
OUT
20/3-7
20/2
SB
31/52
7/8
P
BN-P
B:28
BL-OR
B:9
VO-W
B:29
Y-W
B:11
FENIX 5.2

Engine management system
Fenix 5.2

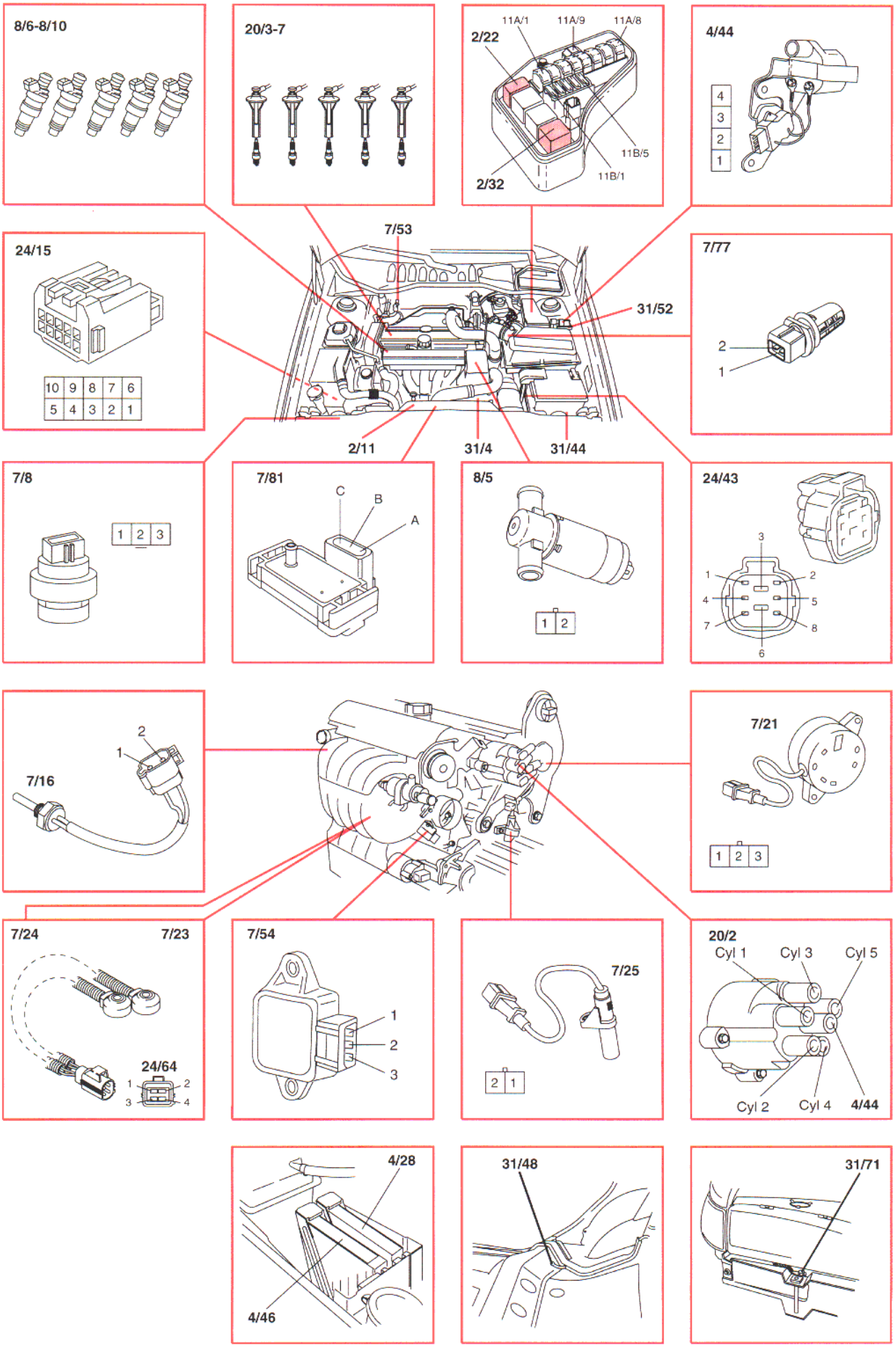

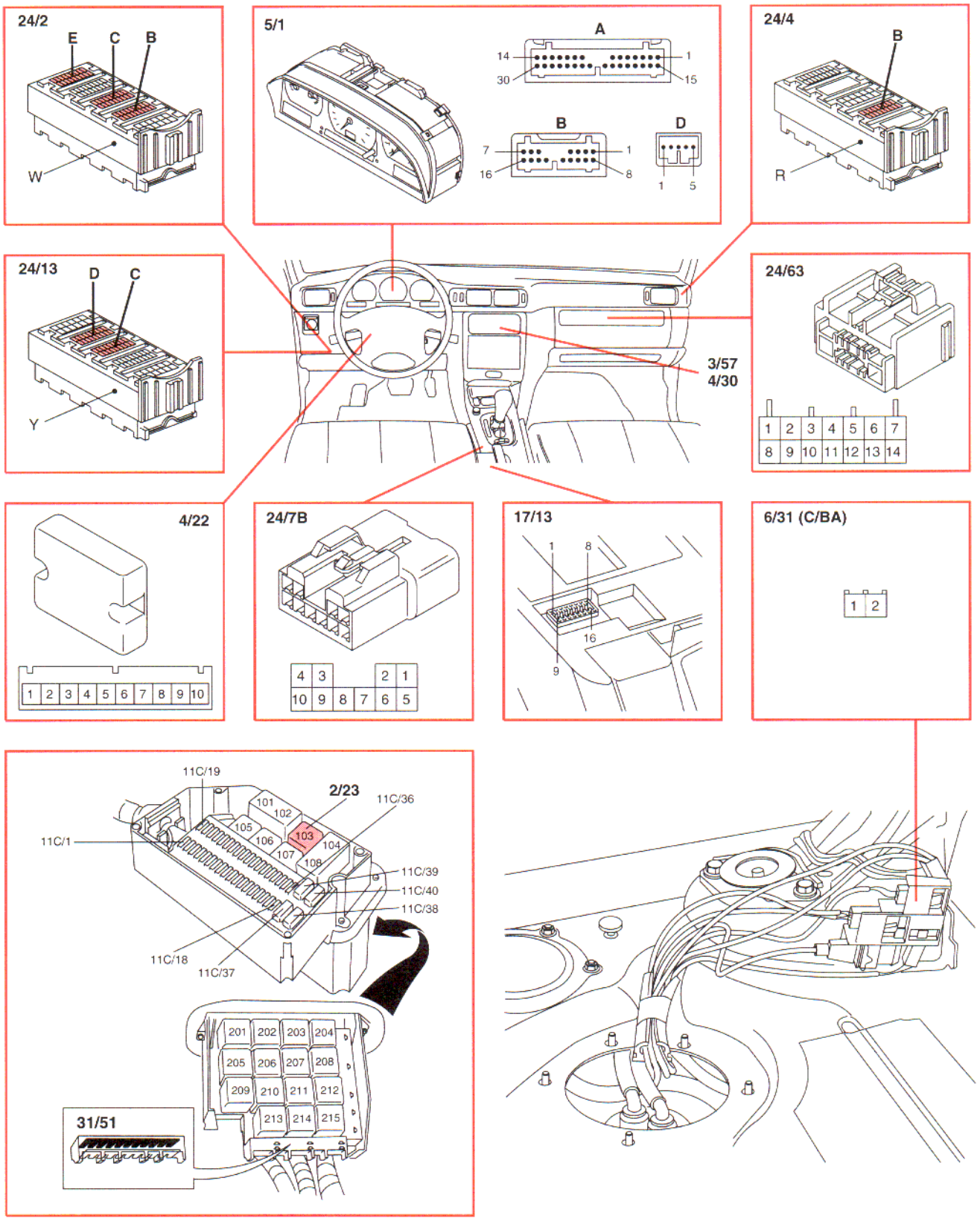
24/2
E
C
B
W
5/1
A
14
1
30
15
B
7
1
16
8
D
1
5
24/4
B
R
24/13
D
C
Y
3/57
4/30
24/63
1 2 3 4 5 6 7
8 9 10 11 12 13 14
4/22
1 2 3 4 5 6 7 8 9 10
24/7B
4 3 2 1
10 9 8 7 6 5
17/13
1
8
16
9
6/31 (C/BA)
1 2
11C/19
2/23
11C/36
101
102
105
106
103
104
107
108
11C/1
11C/39
11C/40
11C/38
11C/18
11C/37
201 202 203 204
205 206 207 208
209 210 211 212
213 214 215
31/51

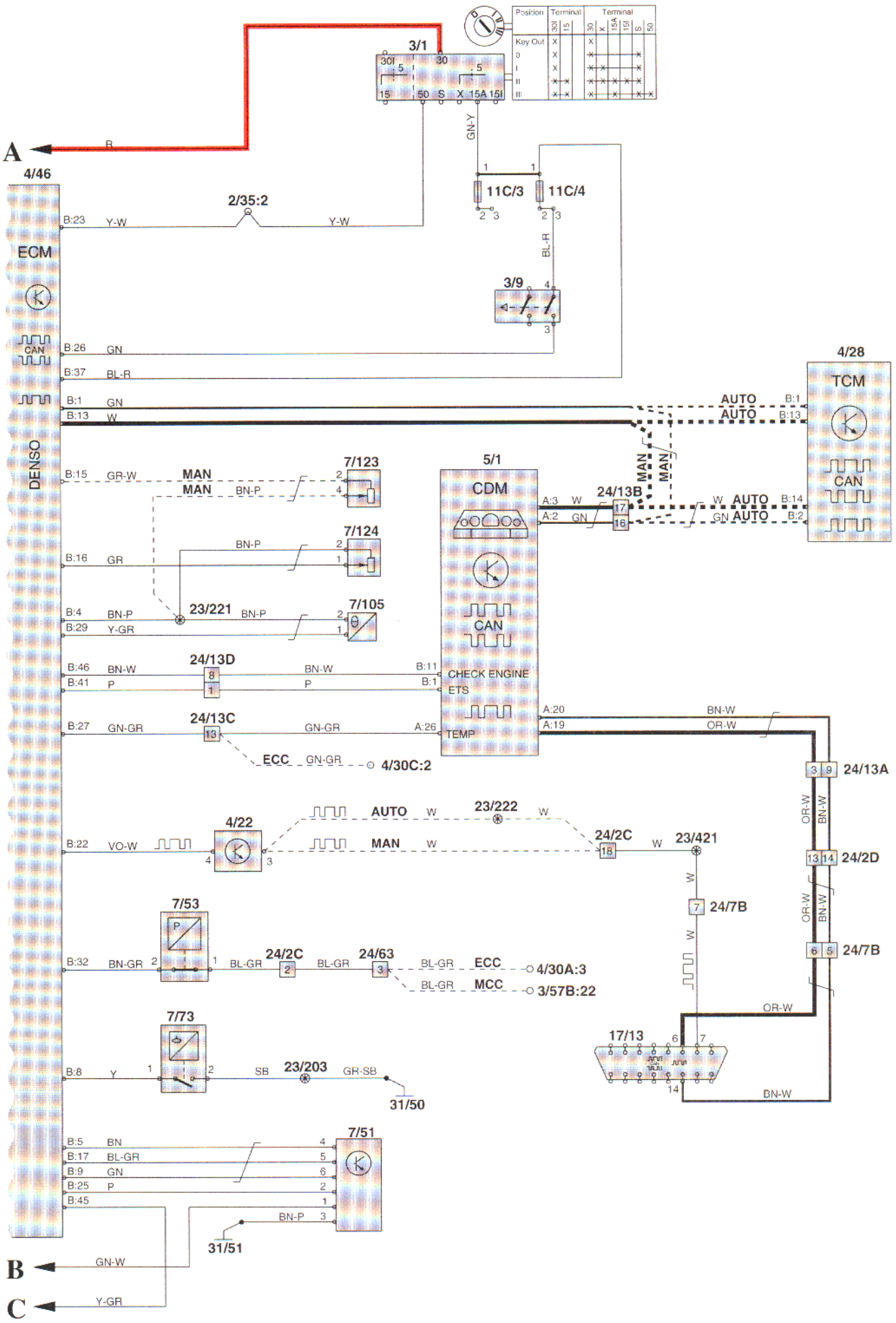
3/1
Position
Terminal
Key Out
A
B
C
R
GN-Y
11C/3
11C/4
BL-R
3/9
4/46
ECM
CAN
DENSO
2/35:2
B:23 Y-W
B:26 GN
B:37 BL-R
B:1 GN
B:13 W
4/28
TCM
AUTO
MAN
B:15 GR-W
7/123
BN-P
B:16 GR
7/124
B:4 BN-P
B:29 Y-GR
23/221
7/105
5/1
CDM
24/13B
A:3 W
A:2 GN
B:46 BN-W
B:41 P
24/13D
B:11
B:1
CHECK ENGINE
ETS
B:27 GN-GR
24/13C
A:26
TEMP
ECC
4/30C:2
A:20 BN-W
A:19 OR-W
24/13A
OR-W
BN-W
24/2D
24/7B
B:22 VO-W
4/22
23/222
24/2C
23/421
7/53
B:32 BN-GR
BL-GR
24/63
4/30A:3
MCC
3/57B:22
7/73
B:8 Y
SB
23/203
GR-SB
31/50
17/13
7/51
B:5 BN
B:17 BL-GR
B:9 GN
B:25 P
B:45
31/51
GN-W
Y-GR

Engine management system
Denso

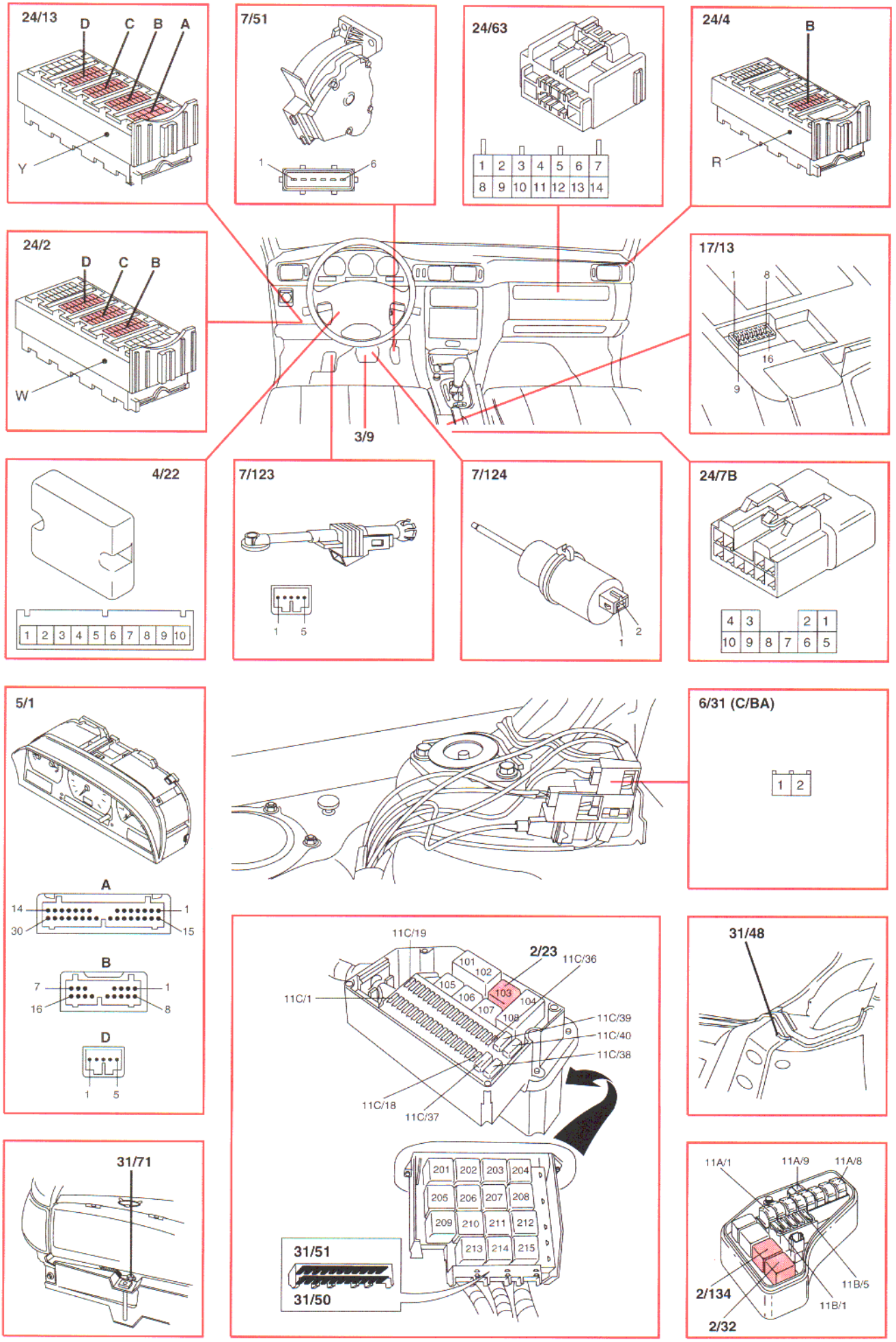

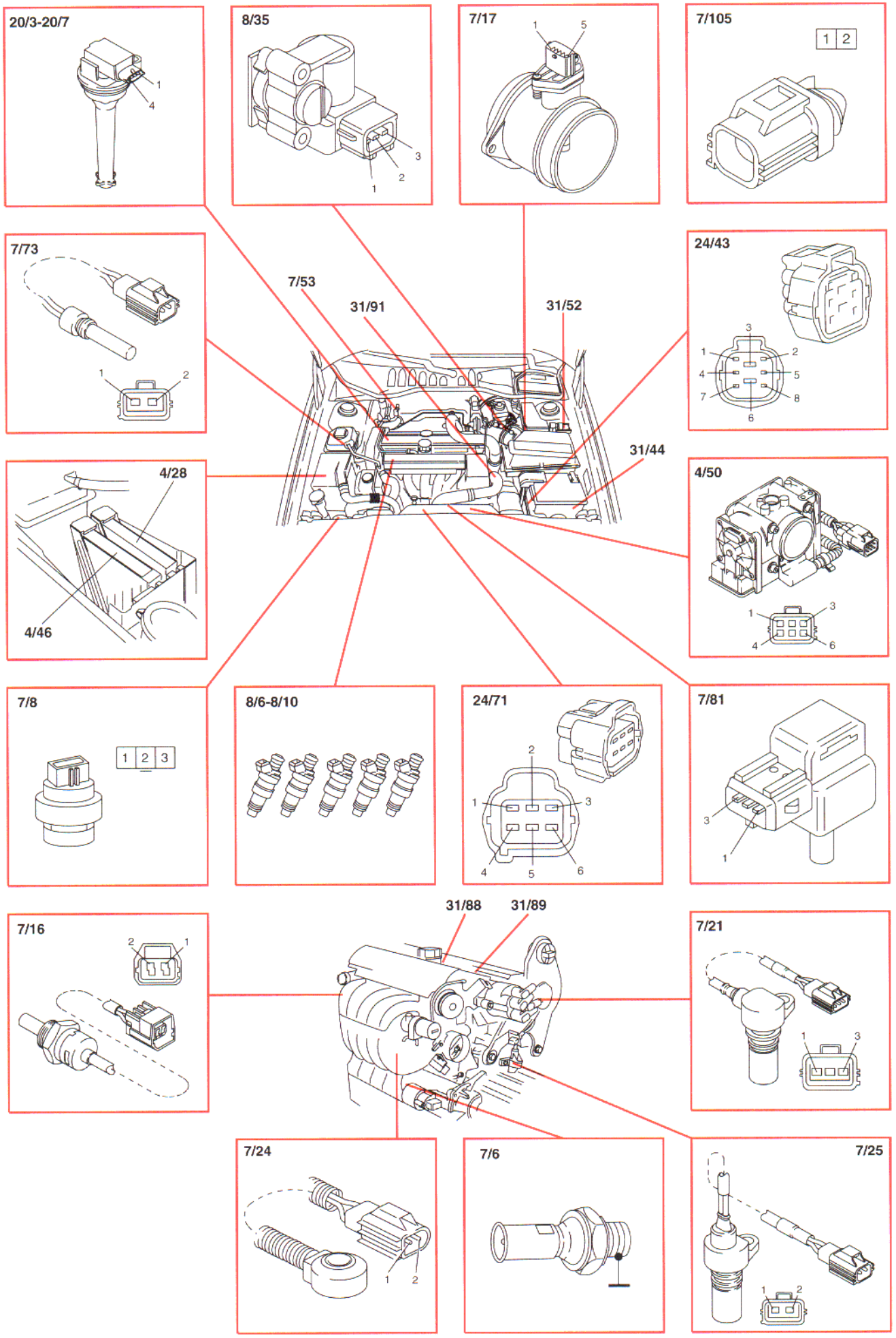
20/3-20/7
1
4
8/35
1
2
3
7/17
1
5
7/105
1 2
7/73
1
2
7/53
31/91
31/52
24/43
3
1
2
4
5
7
8
6
31/44
4/28
4/46
4/50
1
3
4
6
7/8
1 2 3
8/6-8/10
24/71
2
1
3
4
5
6
7/81
3
1
31/88
31/89
7/16
2
1
7/21
1
3
7/24
1
2
7/6
7/25
1
2

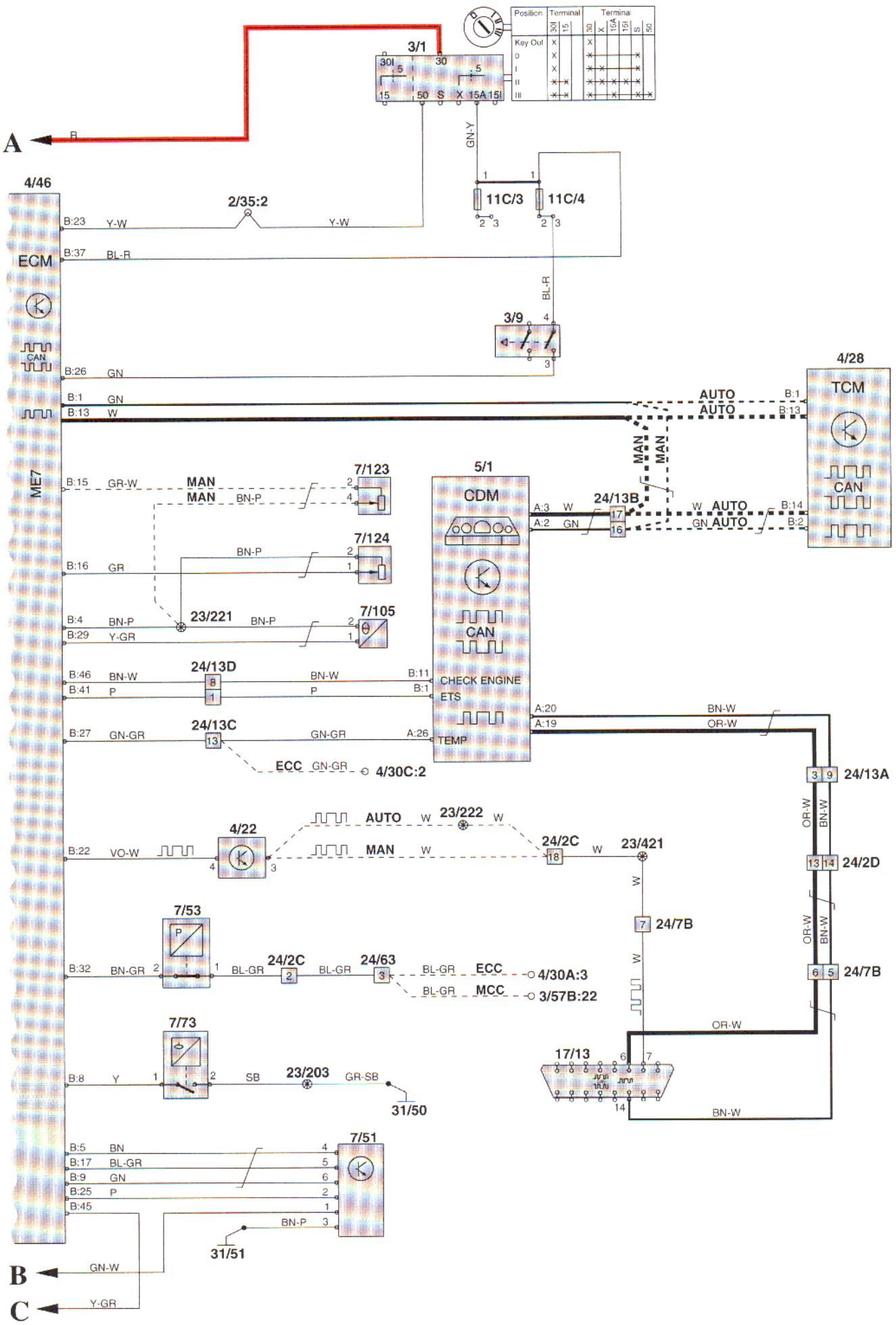
Position
Terminal
Key Out
3/1
30I
30
15
50
S
X
15A
15I
A
B
GN-Y
11C/3
11C/4
4/46
ECM
CAN
2/35:2
B:23
Y-W
B:37
BL-R
3/9
B:26
GN
B:1
B:13
W
4/28
TCM
AUTO
MAN
ME7
B:15
GR-W
7/123
BN-P
B:16
GR
7/124
B:4
B:29
Y-GR
23/221
7/105
5/1
CDM
A:3
A:2
24/13B
B:14
B:2
B:46
BN-W
B:41
P
24/13D
B:11
CHECK ENGINE
ETS
B:27
GN-GR
24/13C
A:26
TEMP
ECC
4/30C:2
A:20
A:19
OR-W
24/13A
24/2D
B:22
VO-W
4/22
23/222
24/2C
23/421
24/7B
7/53
B:32
BN-GR
BL-GR
24/63
4/30A:3
3/57B:22
7/73
B:8
Y
SB
23/203
GR-SB
31/50
17/13
7/51
B:5
BN
B:17
B:9
B:25
B:45
31/51
GN-W
Y-GR

Engine management system
ME7

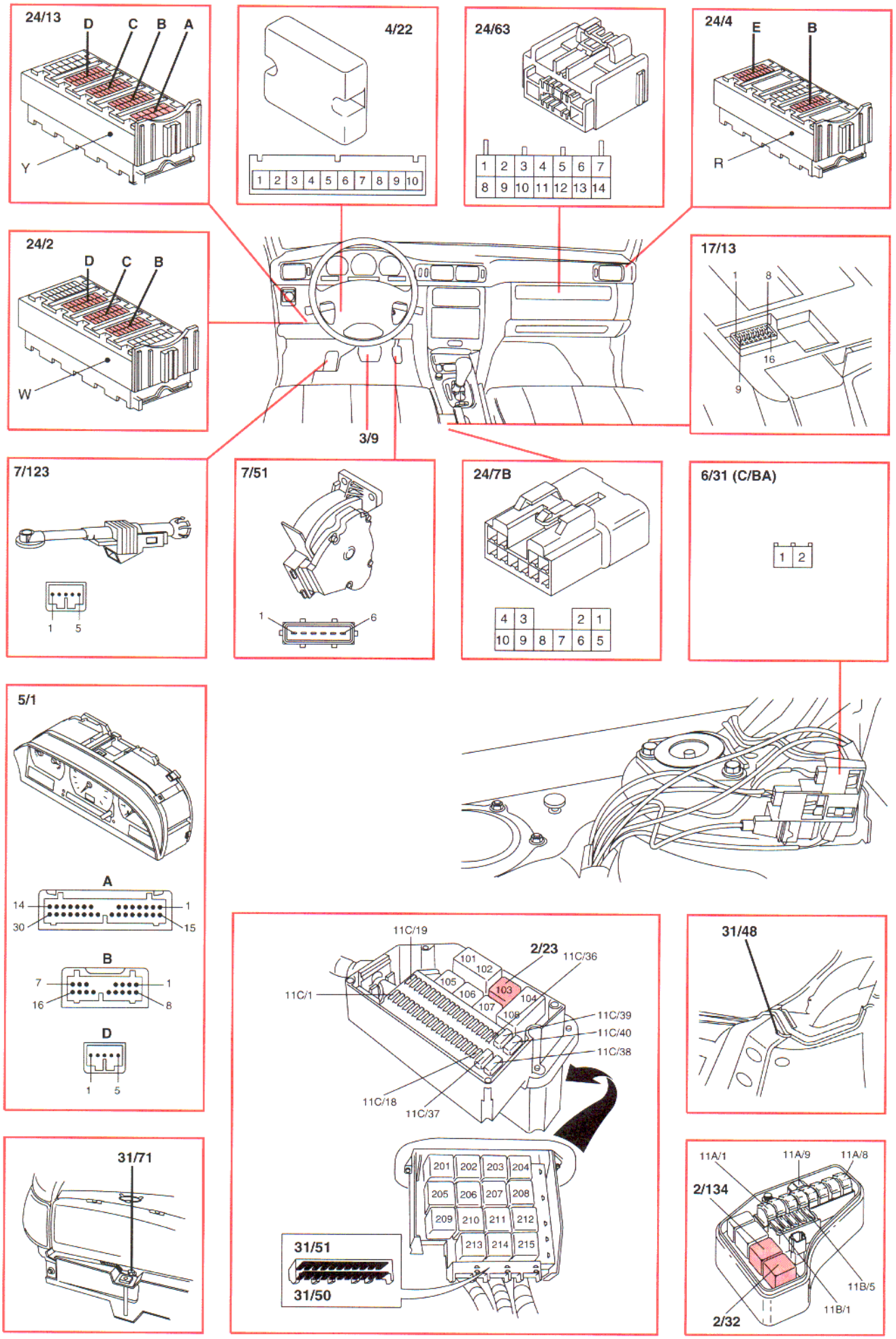

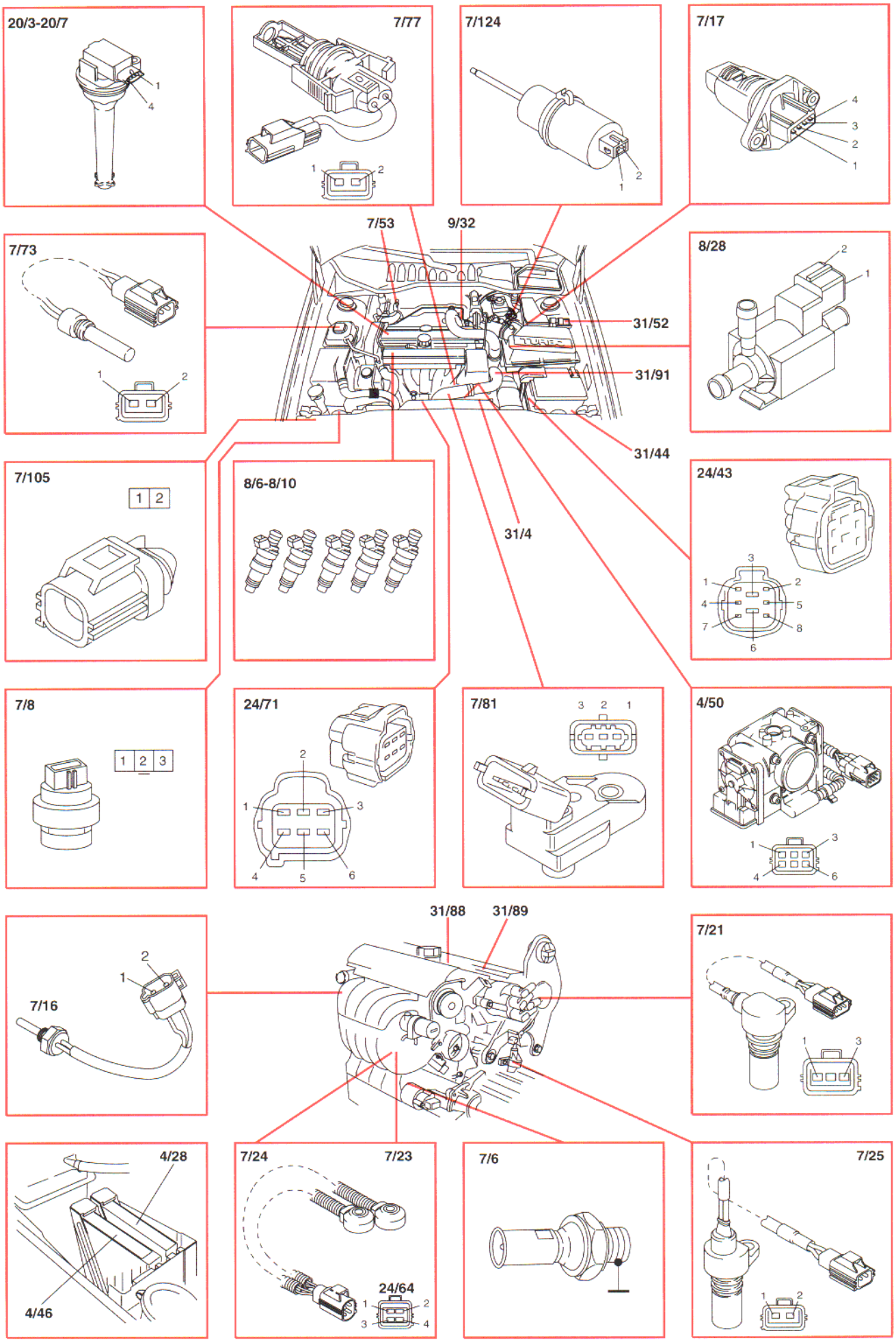
20/3-20/7
7/77
7/124
7/17
7/73
7/53
9/32
8/28
31/52
31/91
31/44
7/105
8/6-8/10
31/4
24/43
7/8
24/71
7/81
4/50
31/88
31/89
7/16
7/21
4/28
4/46
7/24
7/23
24/64
7/6
7/25

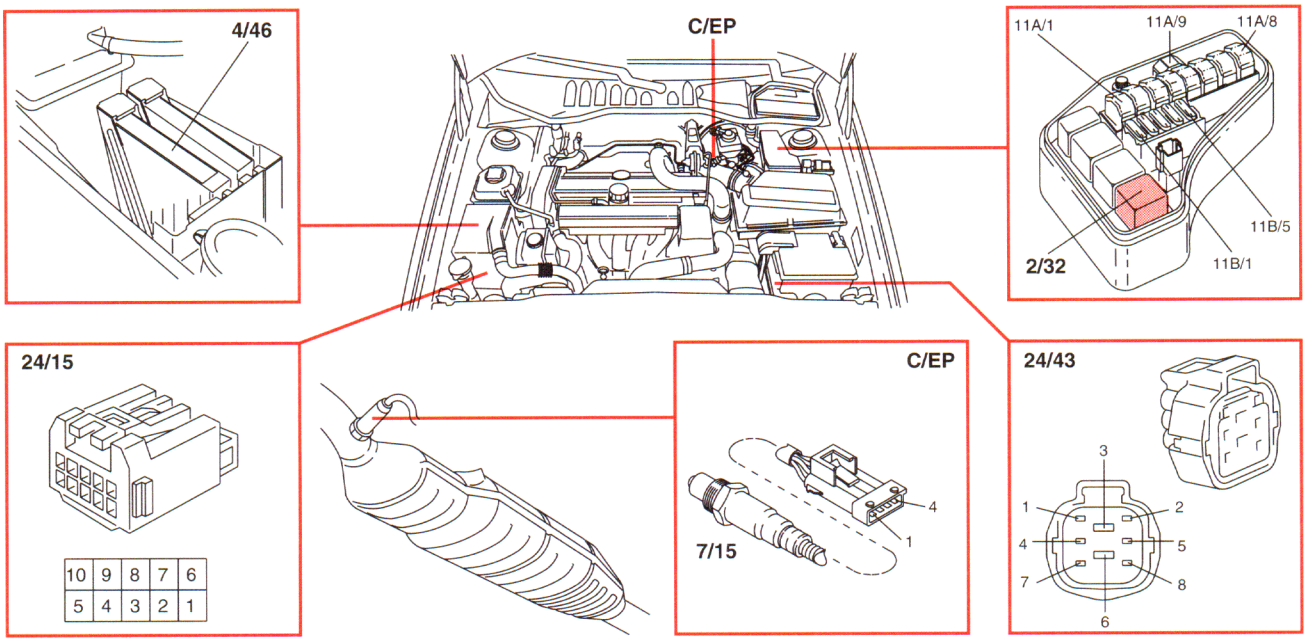
4/46
C/EP
11A/1
11A/9
11A/8
11B/5
2/32
11B/1
24/15
10 9 8 7 6
5 4 3 2 1
C/EP
7/15
4
1
24/43
3
1
2
4
5
7
8
6

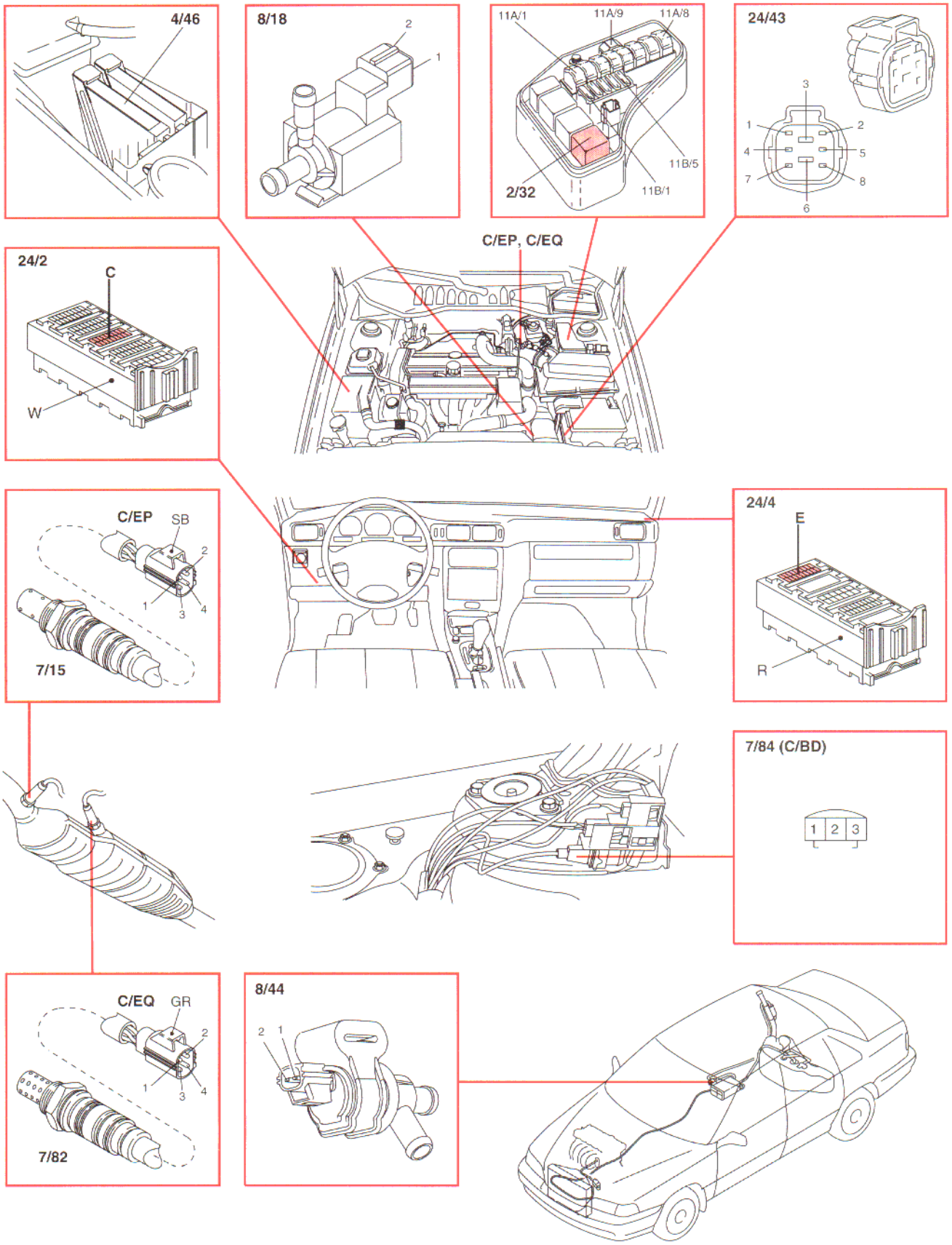
4/46
8/18
2
1
11A/1
11A/9
11A/8
11B/5
2/32
11B/1
24/43
3
1
2
4
5
7
8
6
C/EP, C/EQ
24/2
C
W
C/EP
SB
2
1
3
4
7/15
24/4
E
R
7/84 (C/BD)
1 2 3
C/EQ
GR
2
1
3
4
7/82
8/44
2
1

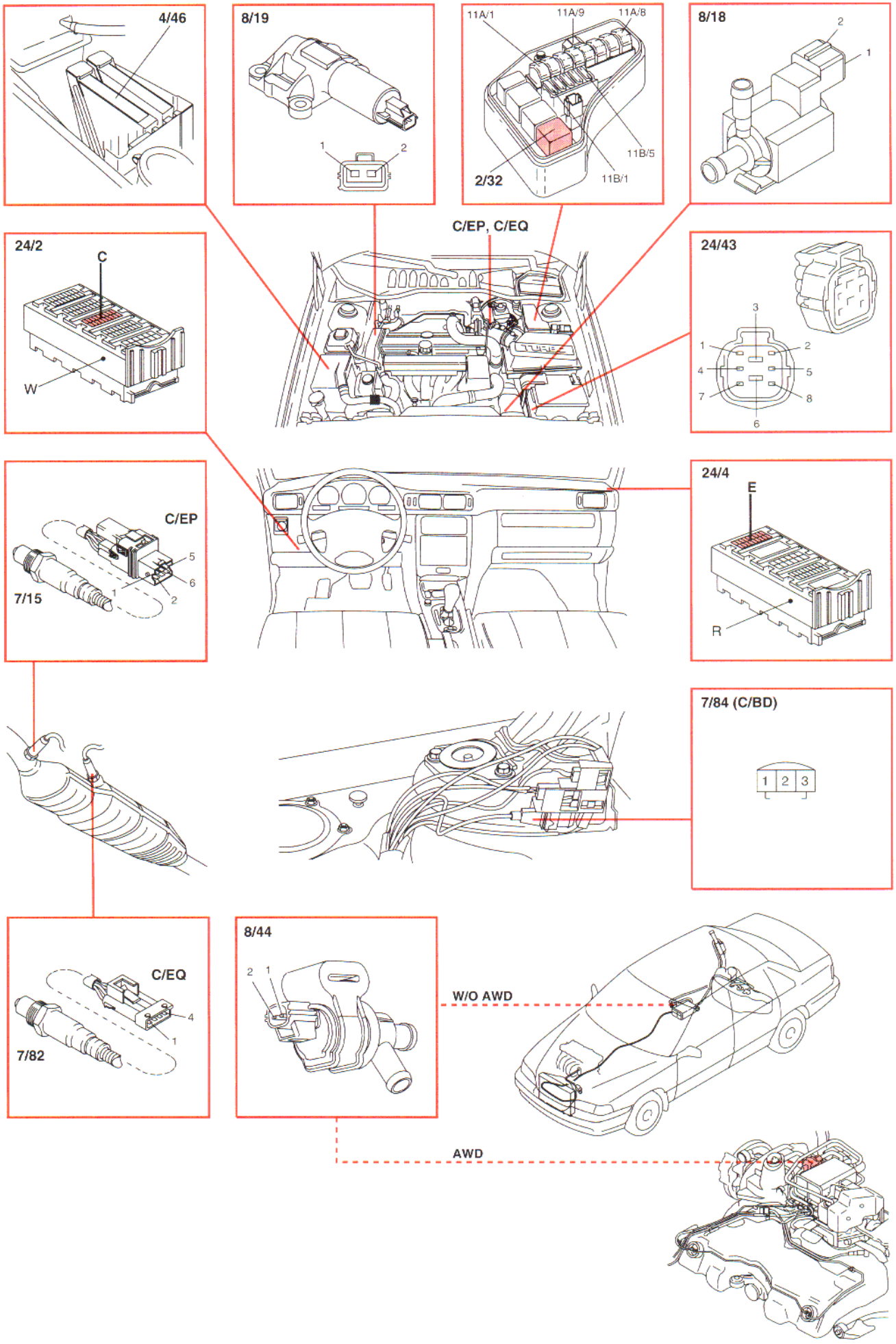
4/46
8/19
1
2
11A/1
11A/9
11A/8
11B/5
11B/1
2/32
8/18
2
1
C/EP, C/EQ
24/2
C
W
24/43
3
1
2
4
5
7
8
6
C/EP
5
6
1
2
7/15
24/4
E
R
7/84 (C/BD)
1
2
3
C/EQ
4
1
7/82
8/44
2
1
W/O AWD
AWD

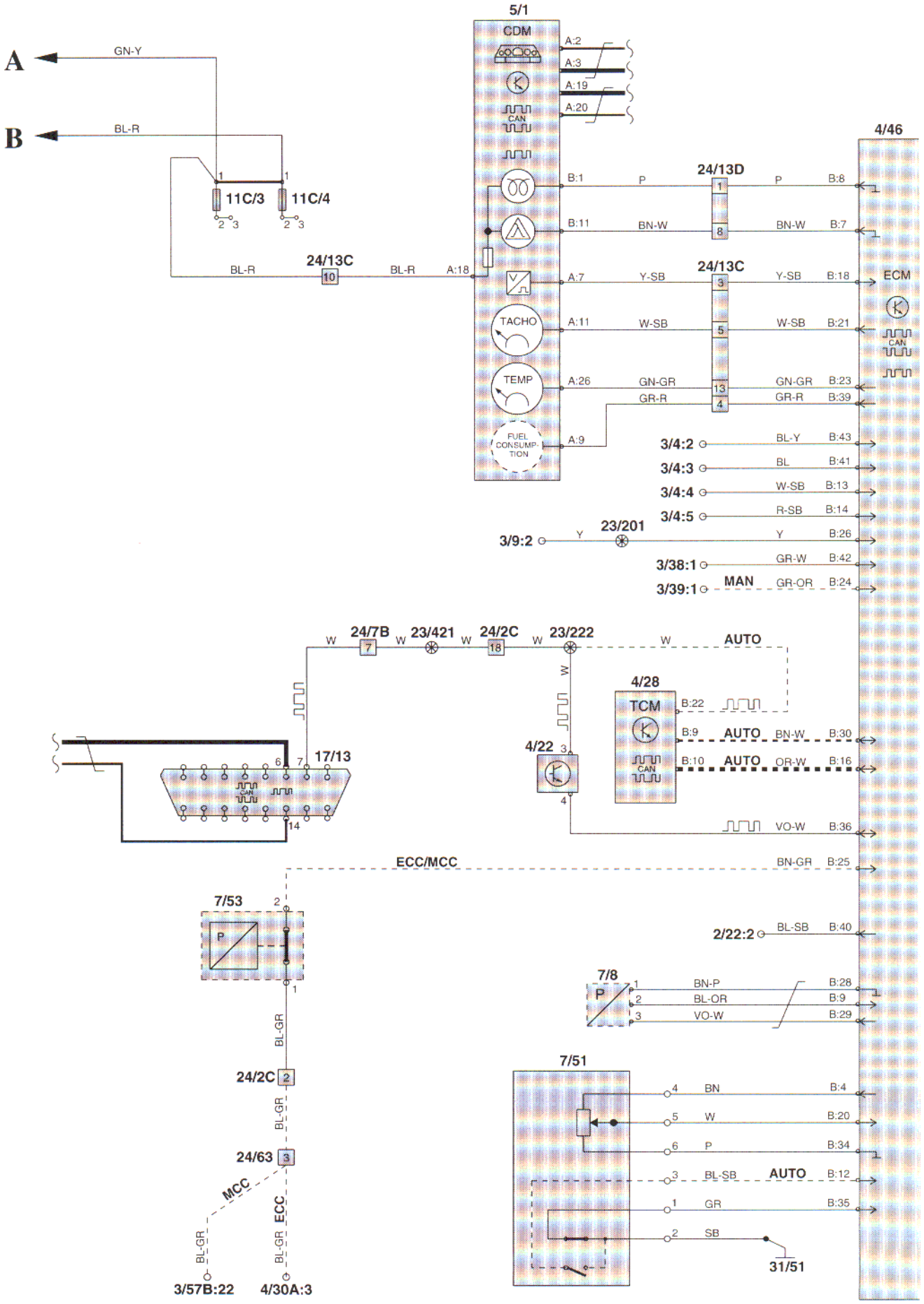
A
B
GN-Y
BL-R
11C/3
11C/4
5/1
CDM
CAN
TACHO
TEMP
FUEL CONSUMP-TION
A:2
A:3
A:19
A:20
A:18
A:7
A:11
A:26
A:9
B:1
B:11
24/13C
24/13D
4/46
ECM
P
BN-W
Y-SB
W-SB
GN-GR
GR-R
B:8
B:7
B:18
B:21
B:23
B:39
3/4:2
3/4:3
3/4:4
3/4:5
BL-Y
BL
R-SB
B:43
B:41
B:13
B:14
3/9:2
23/201
Y
B:26
3/38:1
3/39:1
GR-W
GR-OR
MAN
B:42
B:24
24/7B
23/421
24/2C
23/222
AUTO
4/28
TCM
B:22
B:9
B:10
BN-W
OR-W
B:30
B:16
4/22
17/13
VO-W
B:36
ECC/MCC
BN-GR
B:25
7/53
2/22:2
BL-SB
B:40
7/8
BN-P
BL-OR
VO-W
B:28
B:9
B:29
BL-GR
24/2C
24/63
MCC
ECC
3/57B:22
4/30A:3
7/51
BN
W
P
BL-SB
GR
SB
B:4
B:20
B:34
B:12
B:35
31/51

Engine management system
MSA 15.7

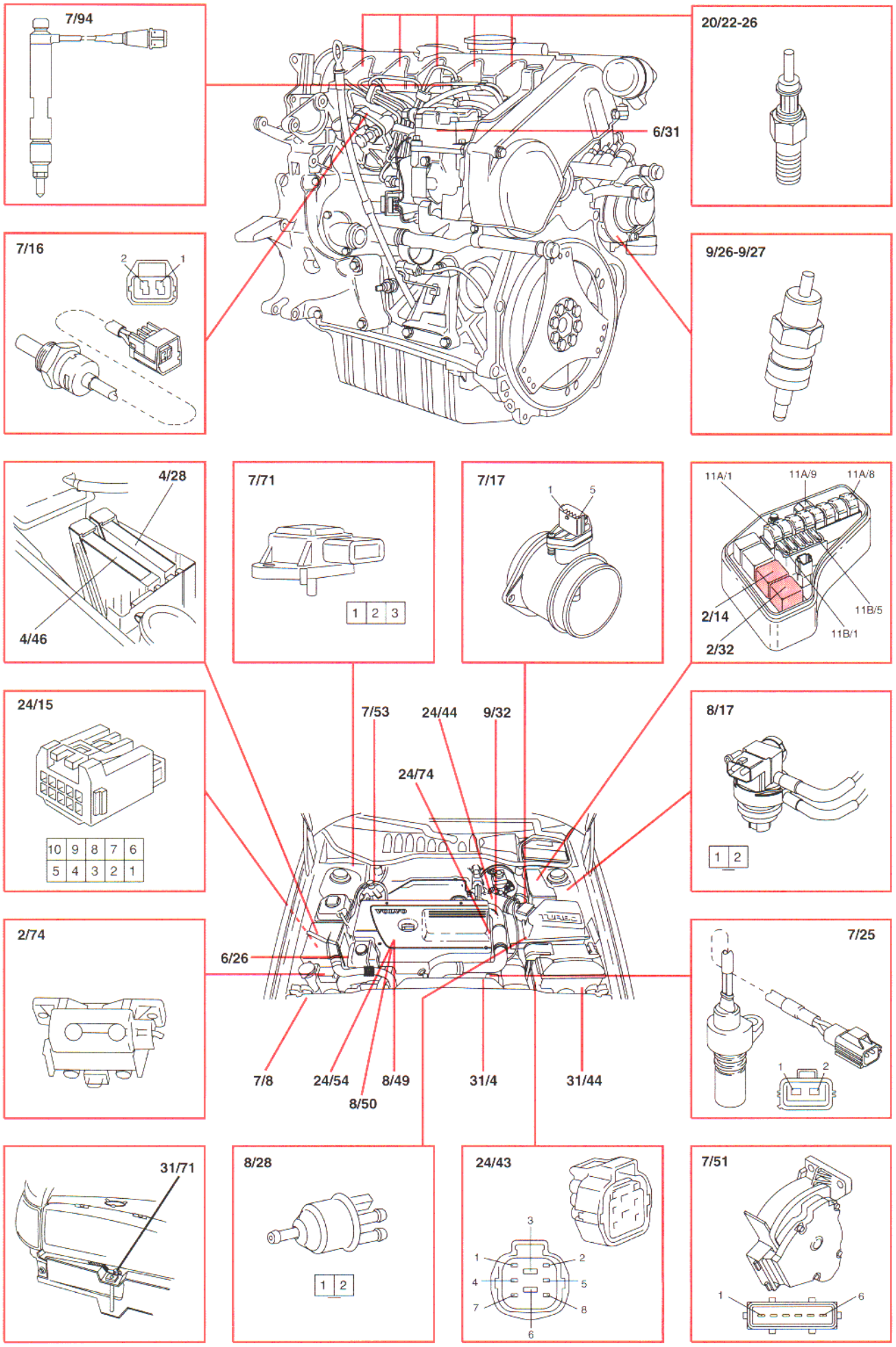

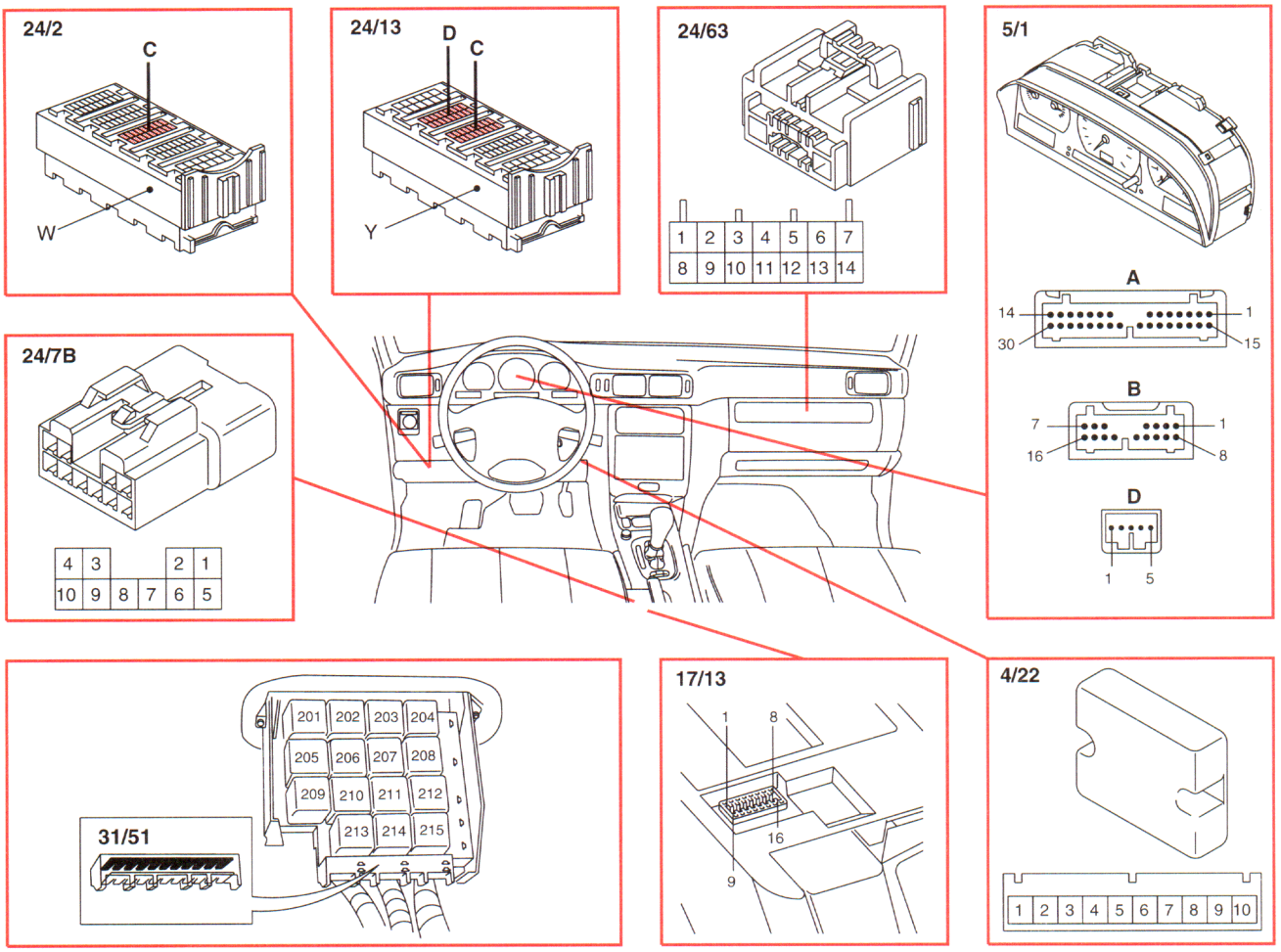
24/2
C
W
24/13
D
C
Y
24/63
1 2 3 4 5 6 7
8 9 10 11 12 13 14
5/1
A
14
1
30
15
B
7
1
16
8
D
1
5
24/7B
4 3 2 1
10 9 8 7 6 5
31/51
201 202 203 204
205 206 207 208
209 210 211 212
213 214 215
17/13
1
8
16
9
4/22
1 2 3 4 5 6 7 8 9 10

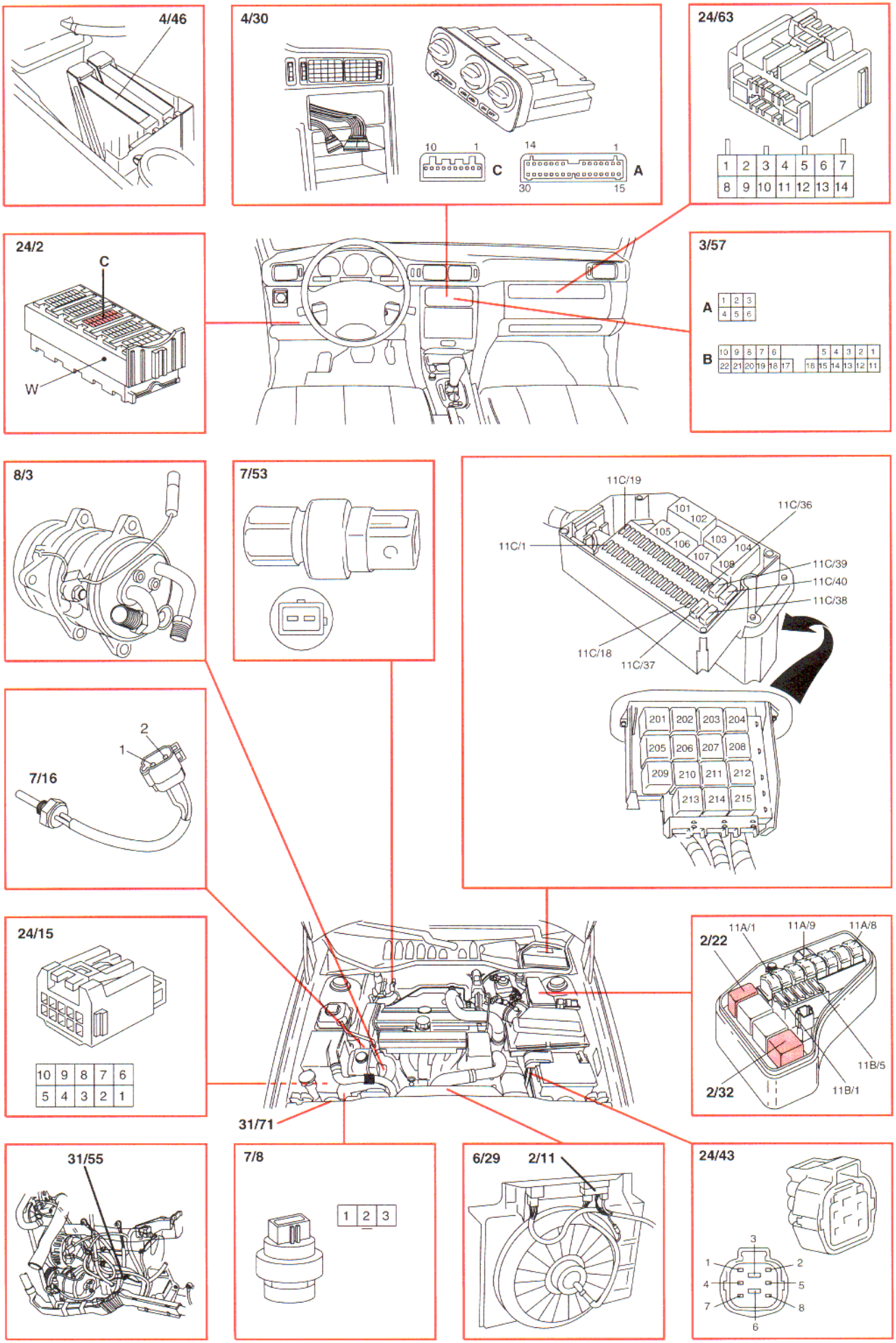
4/46
4/30
10
1
C
14
1
A
30
15
24/63
1 2 3 4 5 6 7
8 9 10 11 12 13 14
24/2
C
W
3/57
A
1 2 3
4 5 6
B
10 9 8 7 6 5 4 3 2 1
22 21 20 19 18 17 16 15 14 13 12 11
8/3
7/53
11C/19
11C/36
11C/1
101
102
103
104
105
106
107
108
11C/39
11C/40
11C/38
11C/18
11C/37
201 202 203 204
205 206 207 208
209 210 211 212
213 214 215
7/16
2
1
24/15
10 9 8 7 6
5 4 3 2 1
31/71
2/22
11A/1
11A/9
11A/8
11B/5
2/32
11B/1
31/55
7/8
1 2 3
6/29
2/11
24/43
3
1
2
4
5
7
8
6

Engine cooling fan (FC)
Denso, ME7

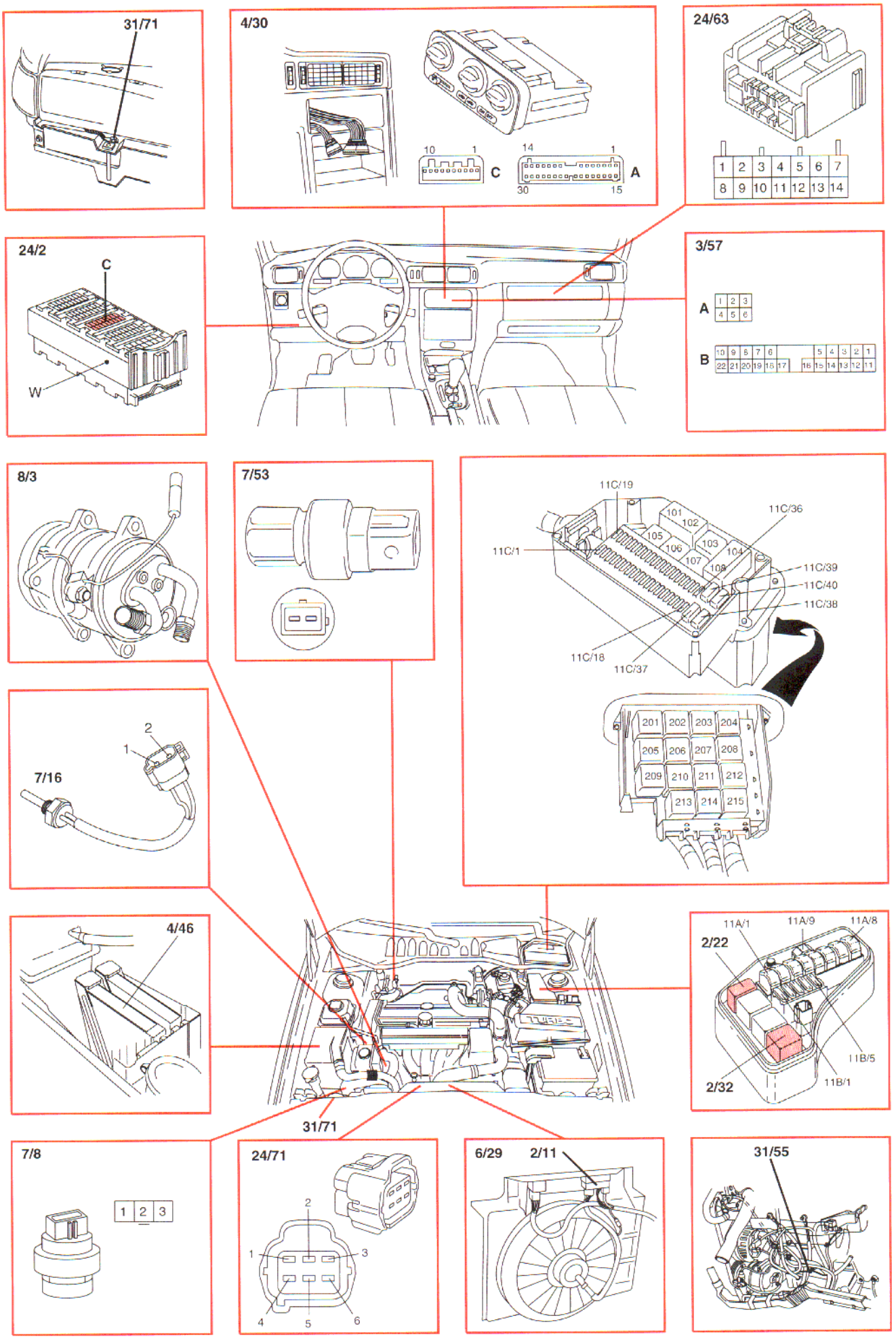

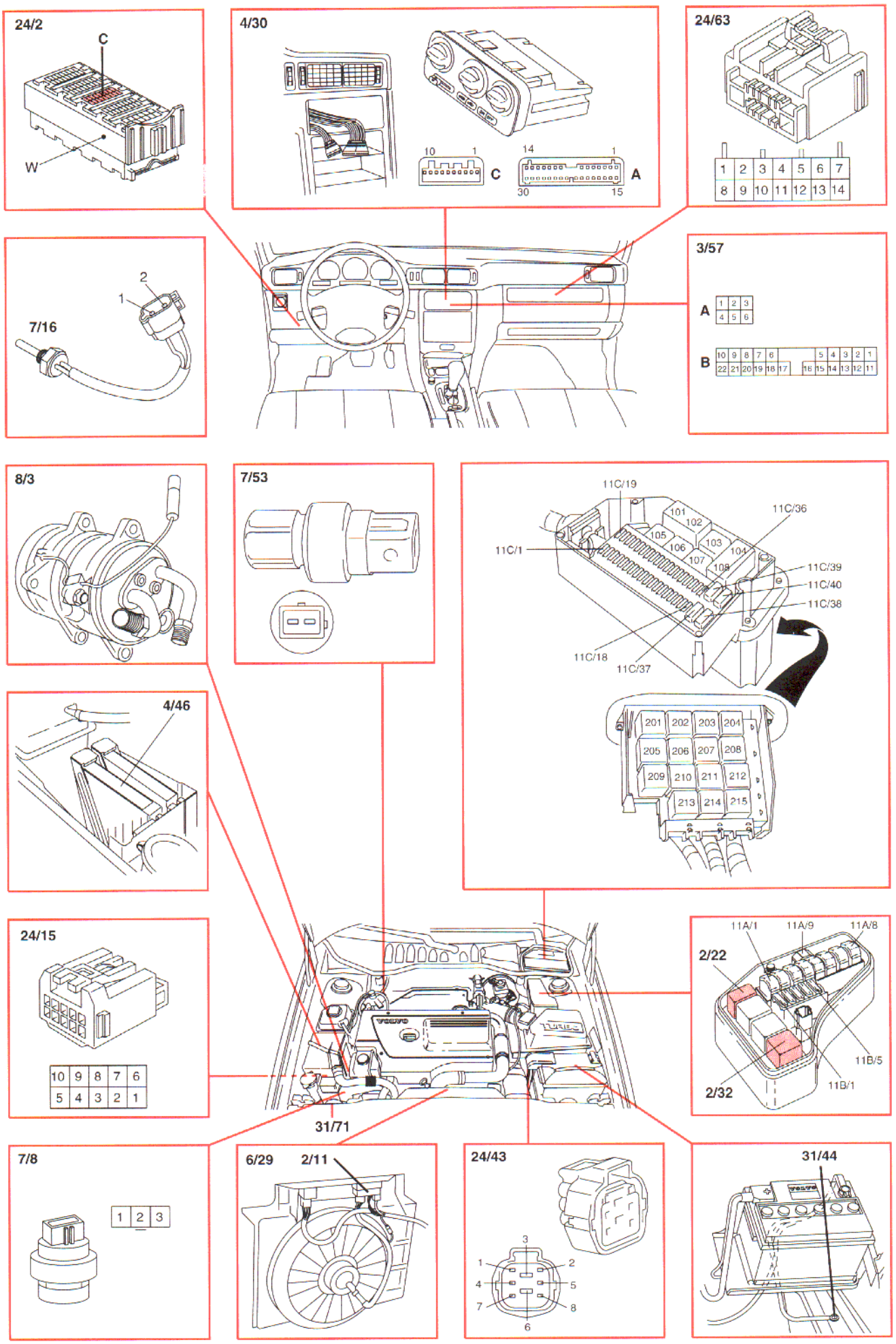
24/2
C
W
4/30
10
1
C
14
1
A
30
15
24/63
1 2 3 4 5 6 7
8 9 10 11 12 13 14
7/16
2
1
3/57
A
1 2 3
4 5 6
B
10 9 8 7 6 5 4 3 2 1
22 21 20 19 18 17 16 15 14 13 12 11
8/3
7/53
11C/19
11C/36
11C/1
101
102
103
104
105
106
107
108
11C/39
11C/40
11C/38
11C/18
11C/37
201 202 203 204
205 206 207 208
209 210 211 212
213 214 215
4/46
24/15
10 9 8 7 6
5 4 3 2 1
31/71
11A/1
11A/9
11A/8
2/22
11B/5
11B/1
2/32
7/8
1 2 3
6/29
2/11
24/43
1
2
3
4
5
6
7
8
31/44

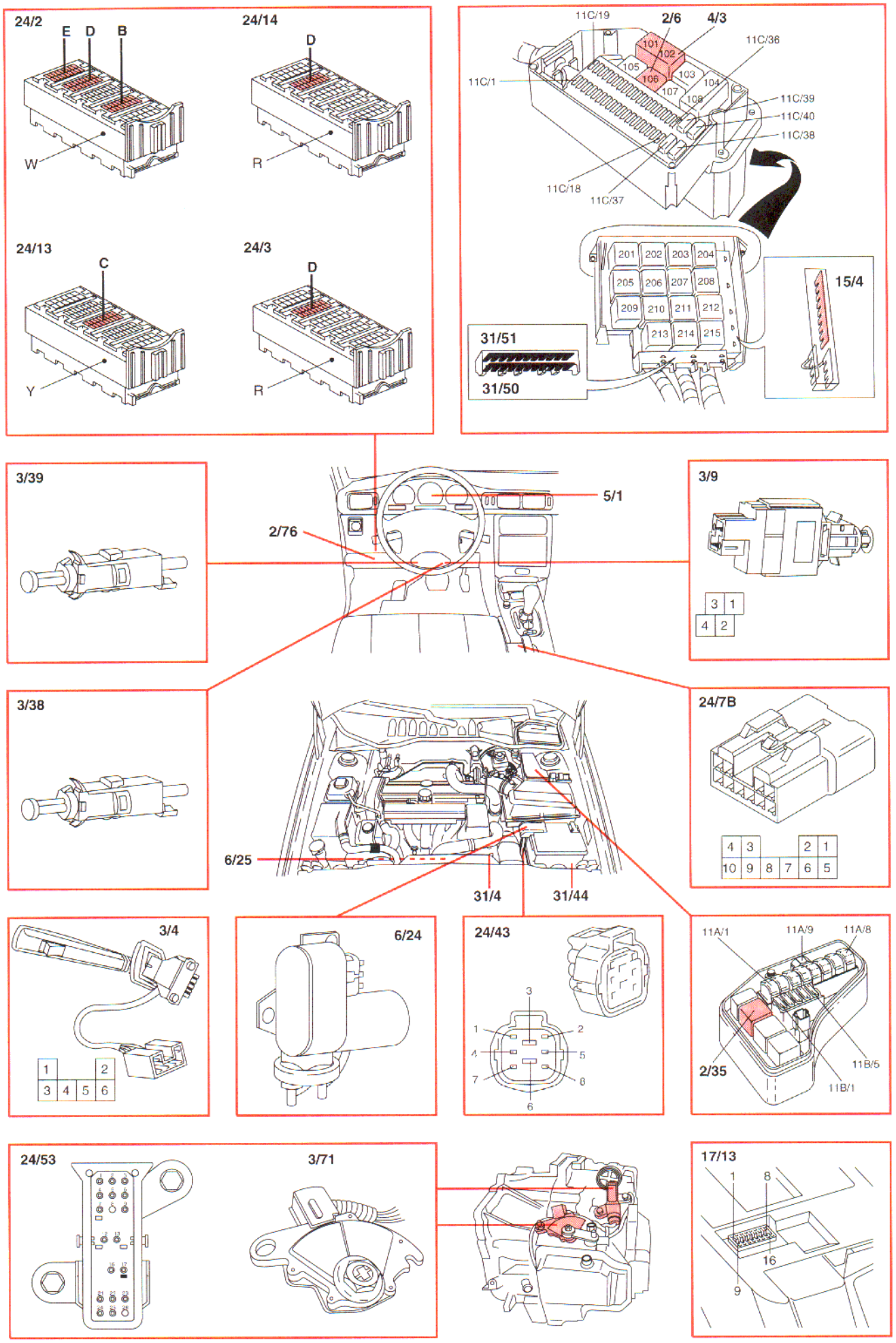
24/2
E D B
W
24/14
D
R
24/13
C
Y
24/3
D
R
11C/19
2/6
4/3
11C/36
11C/1
11C/39
11C/40
11C/38
11C/18
11C/37
101 102 103 104 105 106 107 108
201 202 203 204 205 206 207 208 209 210 211 212 213 214 215
15/4
31/51
31/50
3/39
2/76
5/1
3/9
3 1
4 2
3/38
6/25
31/4
31/44
24/7B
4 3 2 1
10 9 8 7 6 5
3/4
1 2
3 4 5 6
6/24
24/43
1 2 3 4 5 6 7 8
11A/1
11A/9
11A/8
2/35
11B/5
11B/1
24/53
3/71
17/13
1 8 16 9

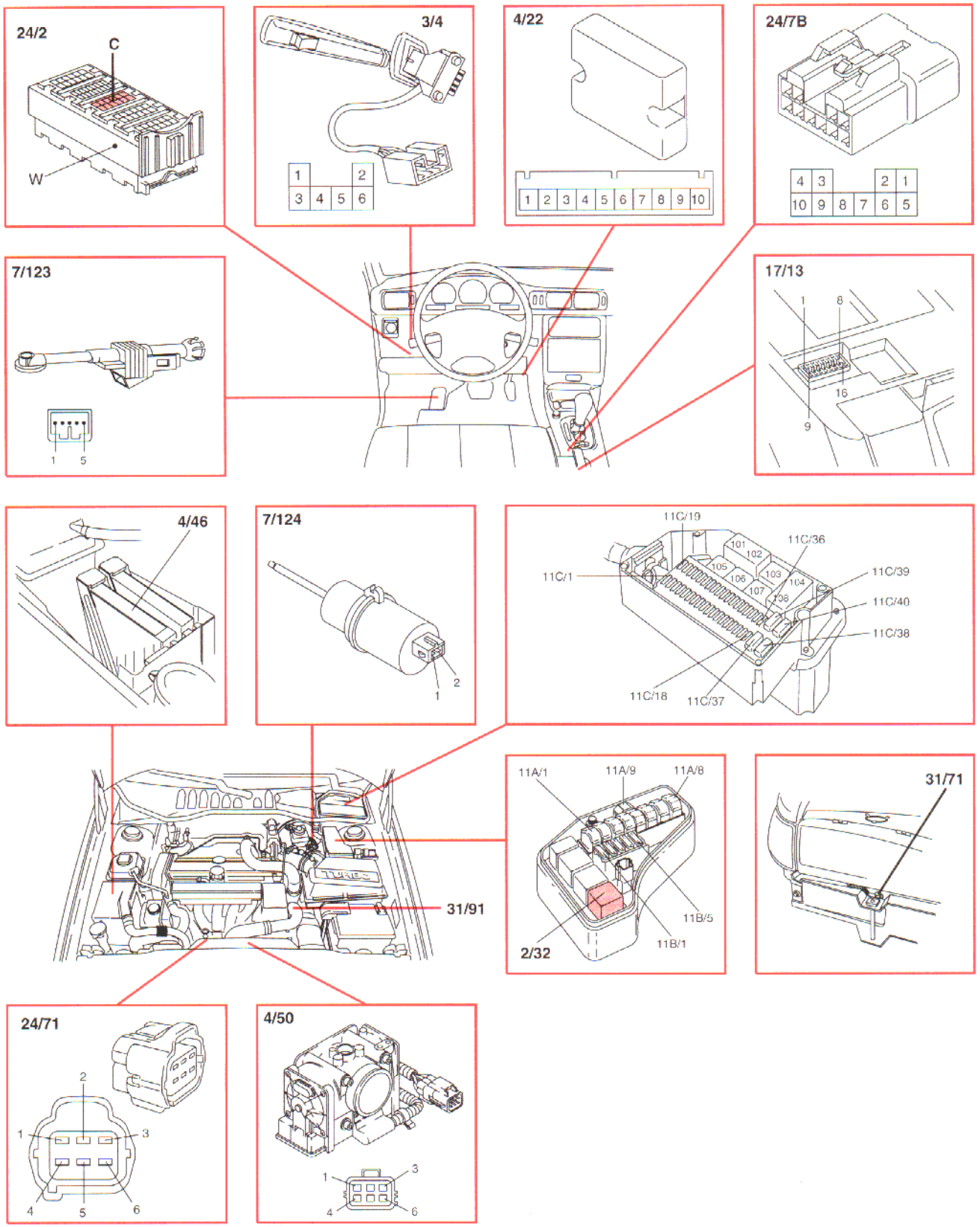
24/2
C
W
3/4
1
2
3 4 5 6
4/22
1 2 3 4 5 6 7 8 9 10
24/7B
4 3 2 1
10 9 8 7 6 5
7/123
1 5
17/13
1
8
16
9
4/46
7/124
2
1
11C/19
11C/36
101
102
105
106
103
104
107
108
11C/1
11C/39
11C/40
11C/38
11C/18
11C/37
31/91
11A/1
11A/9
11A/8
11B/5
11B/1
2/32
31/71
24/71
2
1
3
4
5
6
4/50
1
3
4
6

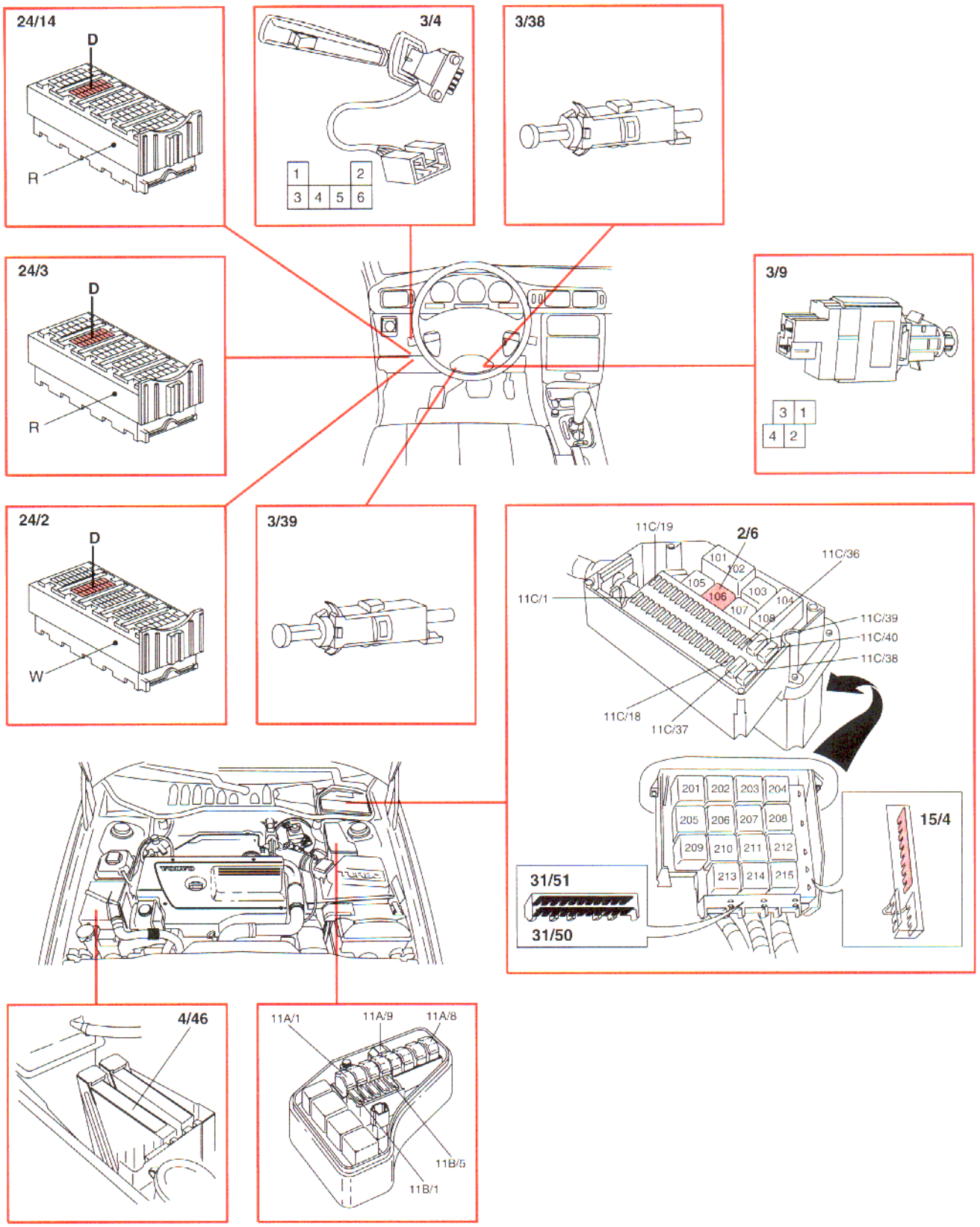
24/14
D
R
3/4
1
2
3
4
5
6
3/38
24/3
D
R
3/9
3
1
4
2
24/2
D
W
3/39
11C/19
2/6
11C/36
101
102
105
106
103
104
107
108
11C/1
11C/39
11C/40
11C/38
11C/18
11C/37
201
202
203
204
205
206
207
208
209
210
211
212
213
214
215
15/4
31/51
31/50
4/46
11A/1
11A/9
11A/8
11B/5
11B/1

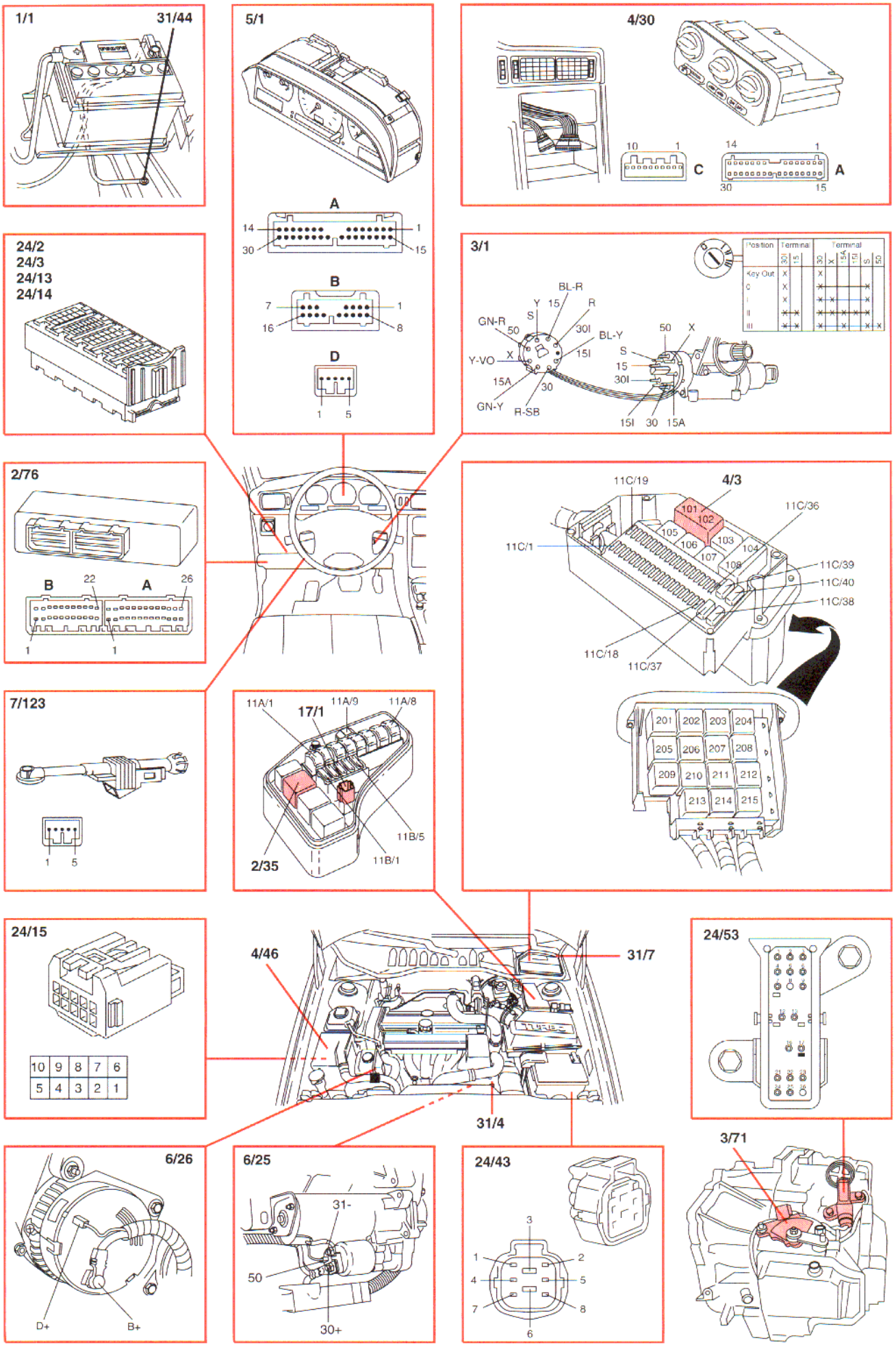
1/1
31/44
5/1
A
14
1
30
15
B
7
1
16
8
D
1
5
4/30
10
1
C
14
1
A
30
15
24/2
24/3
24/13
24/14
3/1
Position
Terminal
Terminal
Key Out
C
I
II
III
BL-R
Y
15
R
S
GN-R
50
30I
BL-Y
15I
Y-VO
X
15A
30
GN-Y
R-SB
50
X
S
15
30I
15I
30
15A
2/76
B
22
A
26
1
1
11C/19
4/3
101
102
105
106
103
104
107
108
11C/36
11C/1
11C/39
11C/40
11C/38
11C/18
11C/37
201
202
203
204
205
206
207
208
209
210
211
212
213
214
215
7/123
1
5
11A/1
17/1
11A/9
11A/8
11B/5
2/35
11B/1
24/15
10
9
8
7
6
5
4
3
2
1
4/46
31/7
31/4
24/53
6/26
D+
B+
6/25
31-
50
30+
24/43
3
1
2
4
5
7
8
6
3/71

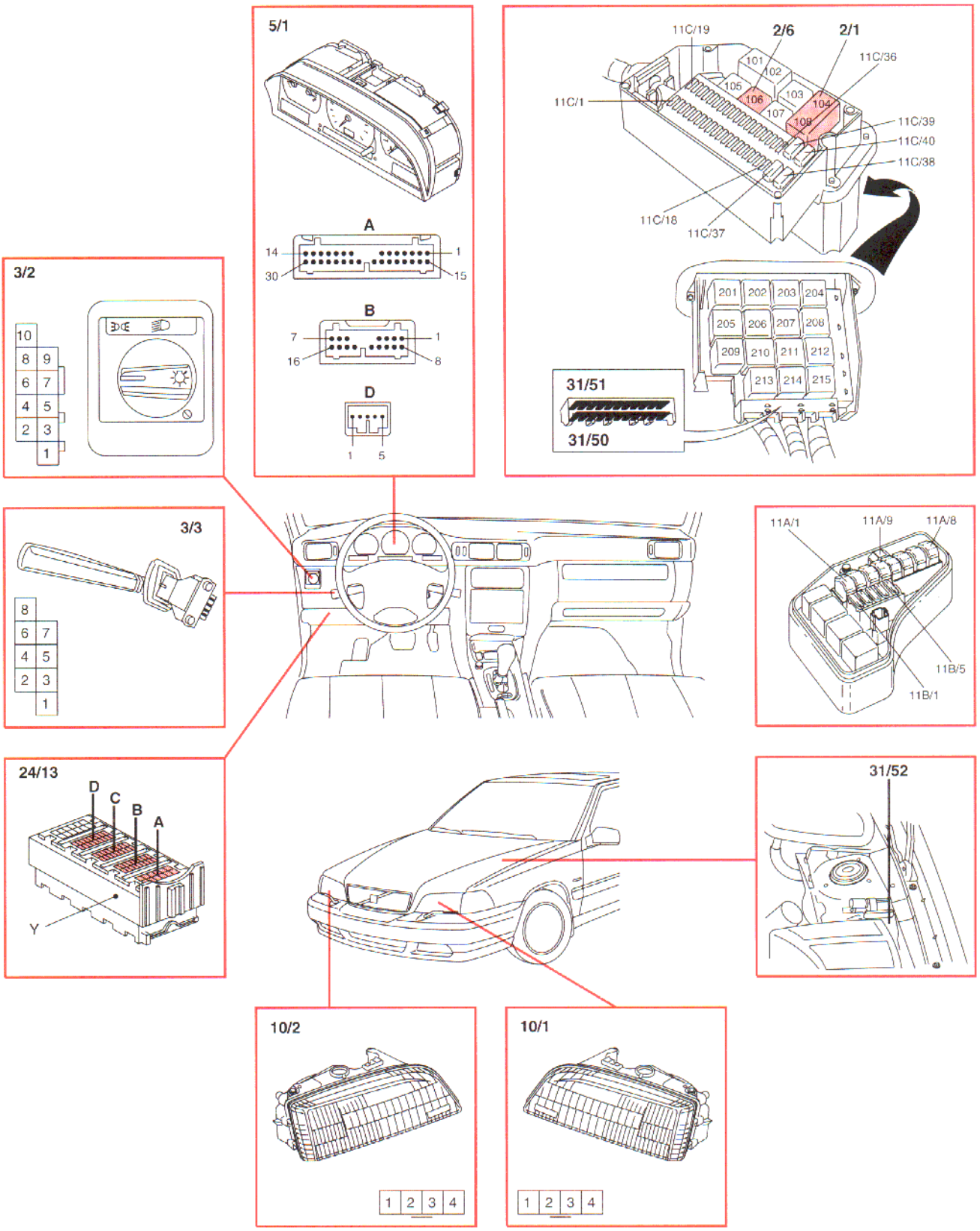
5/1
A
14
30
1
15
B
7
16
1
8
D
1
5
11C/19
2/6
2/1
11C/36
11C/1
101
102
103
104
105
106
107
108
11C/39
11C/40
11C/38
11C/18
11C/37
201
202
203
204
205
206
207
208
209
210
211
212
213
214
215
31/51
31/50
3/2
10
8
9
6
7
4
5
2
3
1
3/3
8
6
7
4
5
2
3
1
11A/1
11A/9
11A/8
11B/5
11B/1
24/13
D
C
B
A
Y
31/52
10/2
1
2
3
4
10/1
1
2
3
4

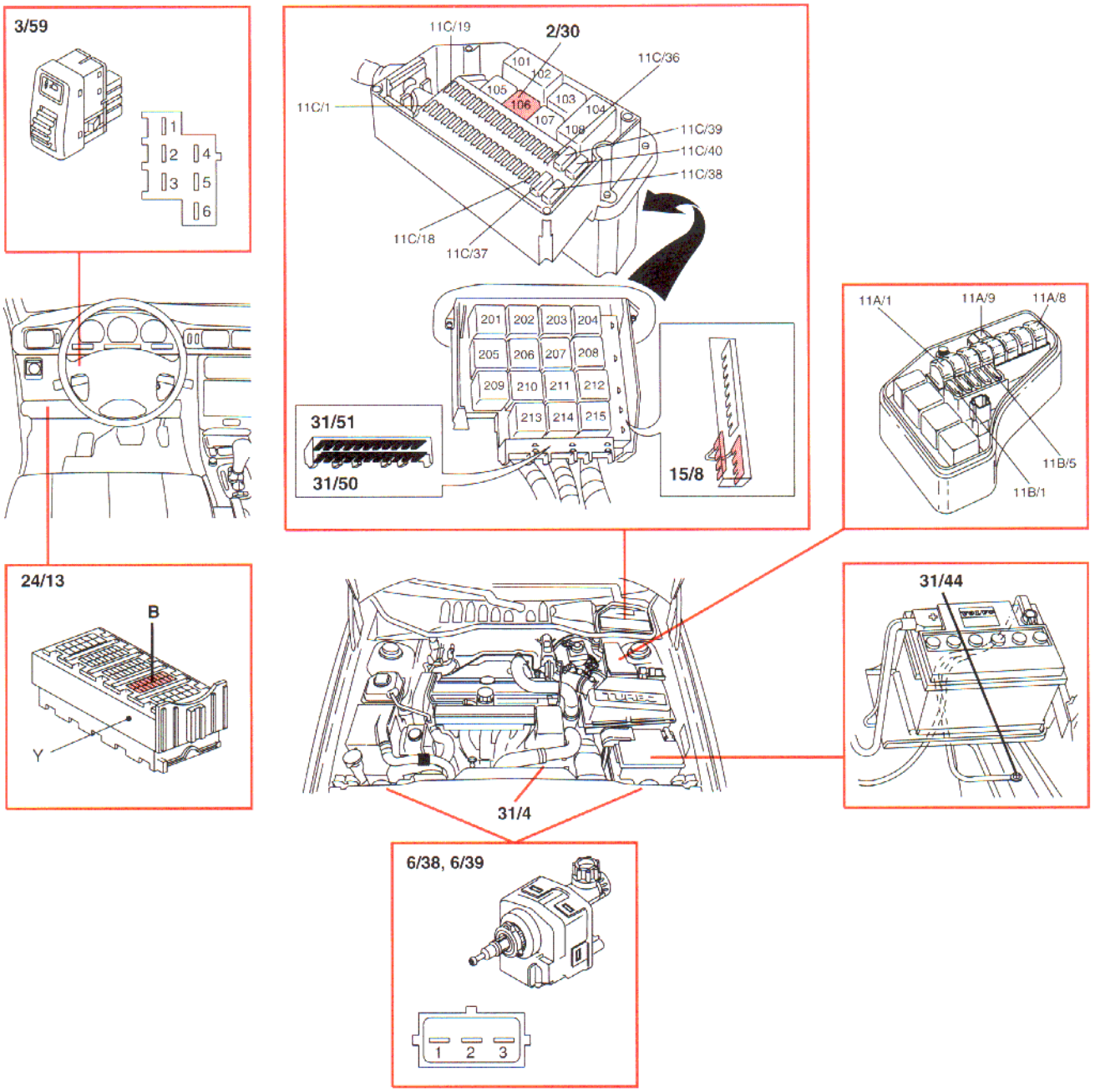
3/59
1
2
3
4
5
6
2/30
11C/19
11C/36
11C/1
101
102
103
104
105
106
107
108
11C/39
11C/40
11C/38
11C/18
11C/37
201
202
203
204
205
206
207
208
209
210
211
212
213
214
215
31/51
31/50
15/8
11A/1
11A/9
11A/8
11B/5
11B/1
24/13
B
Y
31/44
31/4
6/38, 6/39
1
2
3

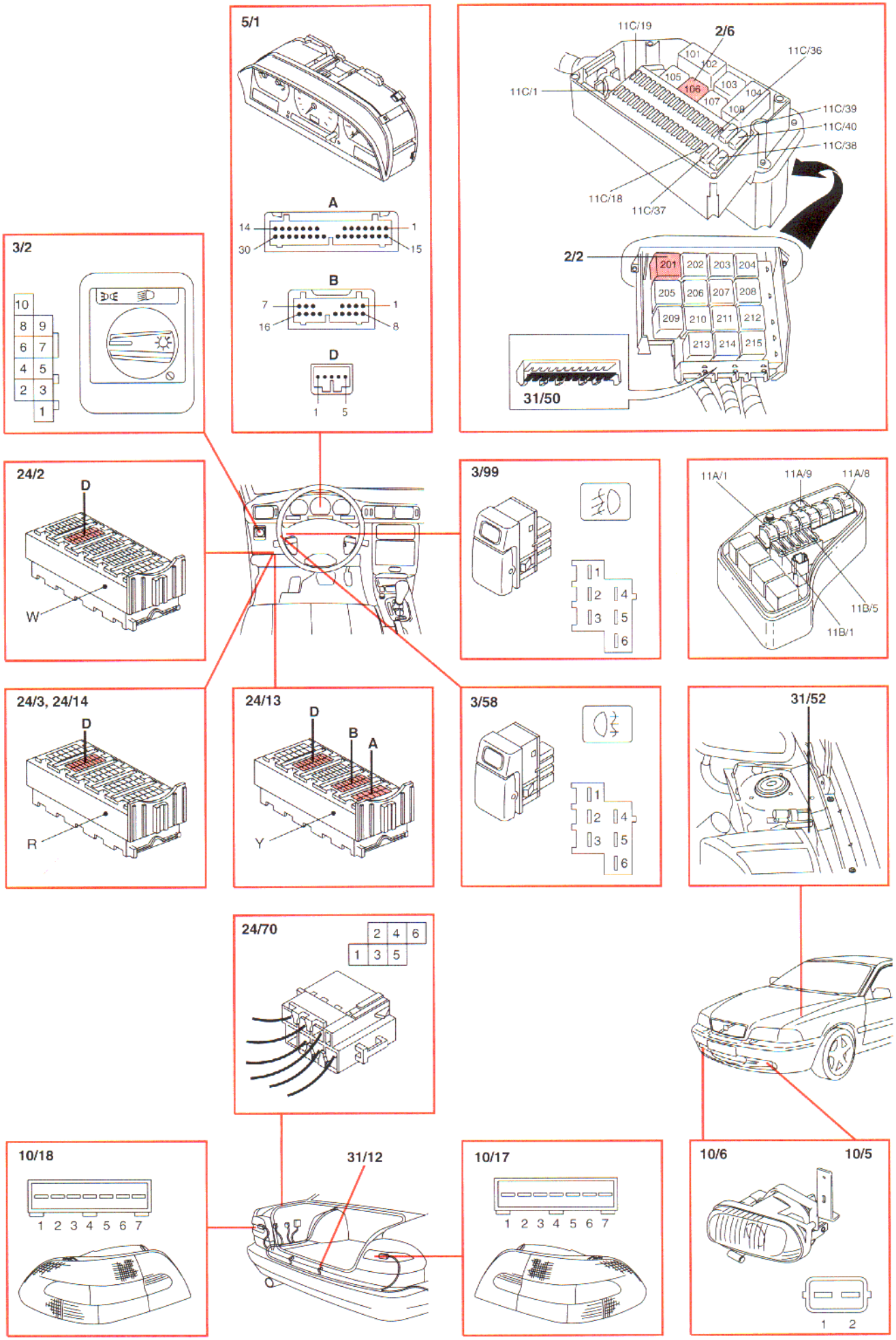
5/1
A
14
30
1
15
B
7
16
1
8
D
1
5
2/6
11C/19
11C/36
11C/1
101
102
103
104
105
106
107
108
11C/39
11C/40
11C/38
11C/18
11C/37
2/2
201
202
203
204
205
206
207
208
209
210
211
212
213
214
215
31/50
3/2
10
8
9
6
7
4
5
2
3
1
24/2
D
W
3/99
1
2
4
3
5
6
11A/1
11A/9
11A/8
11B/5
11B/1
24/3, 24/14
D
R
24/13
D
B
A
Y
3/58
1
2
4
3
5
6
31/52
24/70
2
4
6
1
3
5
10/18
1 2 3 4 5 6 7
31/12
10/17
1 2 3 4 5 6 7
10/6
10/5
1
2

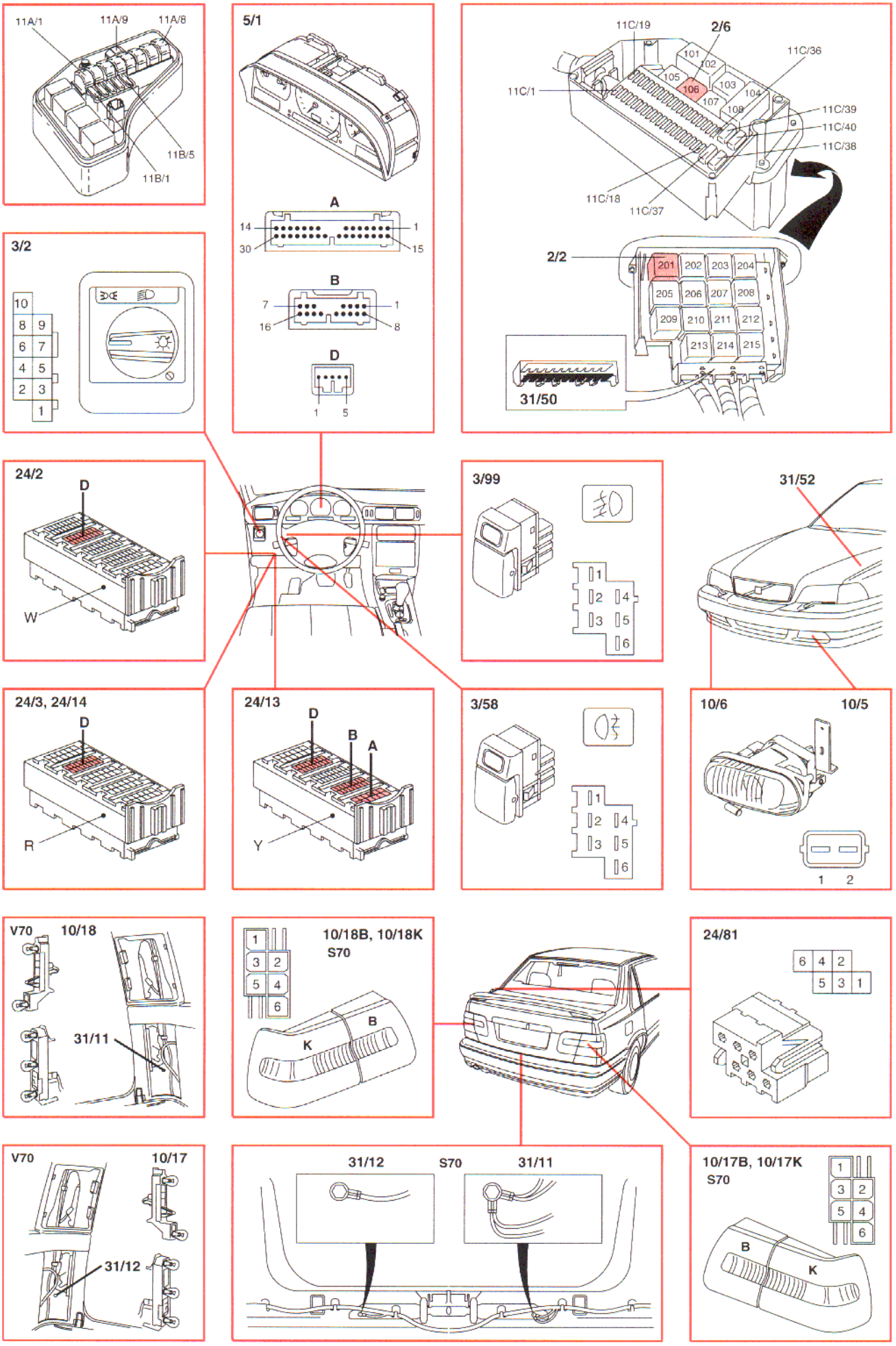
11A/1
11A/9
11A/8
11B/5
11B/1
5/1
A
14
1
30
15
B
7
1
16
8
D
1
5
11C/19
2/6
11C/36
11C/1
101
102
105
106
103
104
107
108
11C/39
11C/40
11C/38
11C/18
11C/37
2/2
201
202
203
204
205
206
207
208
209
210
211
212
213
214
215
31/50
3/2
10
8
9
6
7
4
5
2
3
1
24/2
D
W
3/99
1
2
4
3
5
6
31/52
24/3, 24/14
D
R
24/13
D
B
A
Y
3/58
1
2
4
3
5
6
10/6
10/5
1
2
V70
10/18
31/11
10/18B, 10/18K
S70
1
3
2
5
4
6
B
K
24/81
6
4
2
5
3
1
V70
10/17
31/12
31/12
S70
31/11
10/17B, 10/17K
S70
1
3
2
5
4
6
B
K

Parking lamps, tail lamps and license (number) plate lighting C70

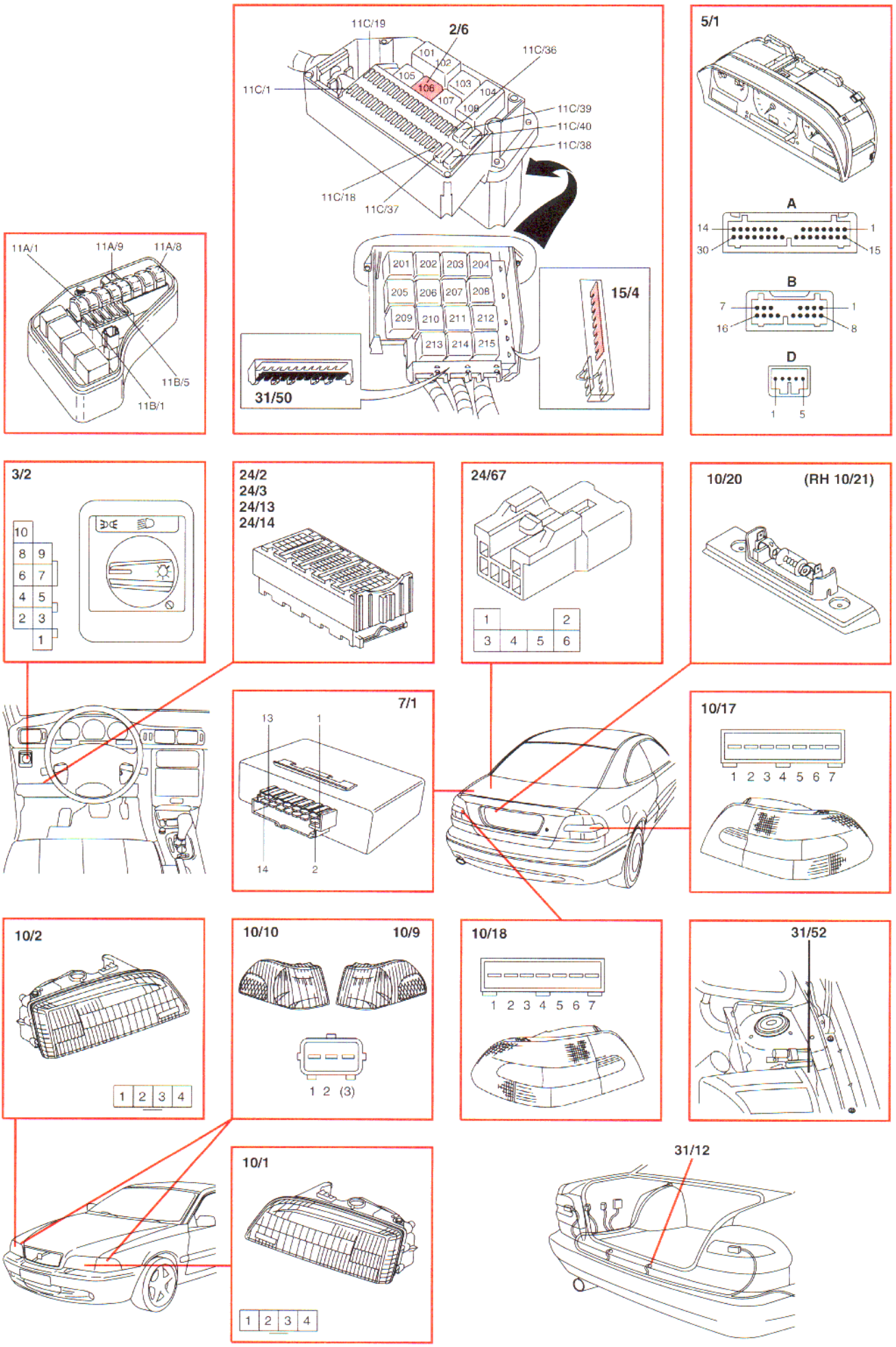

Parking lamps, tail lamps and license (number) plate lighting S70

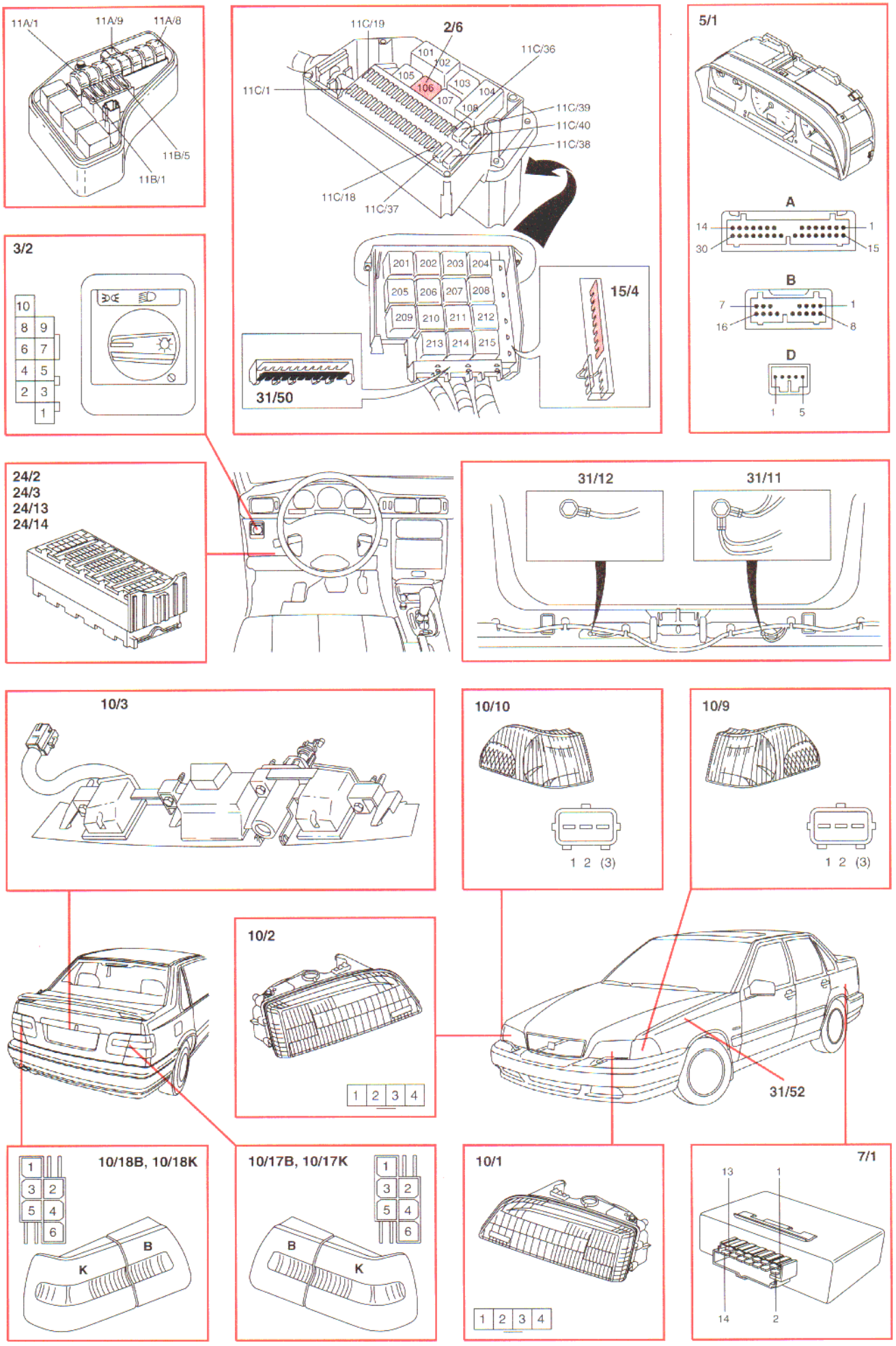

Parking lamps, tail lamps and license (number) plate lighting V70

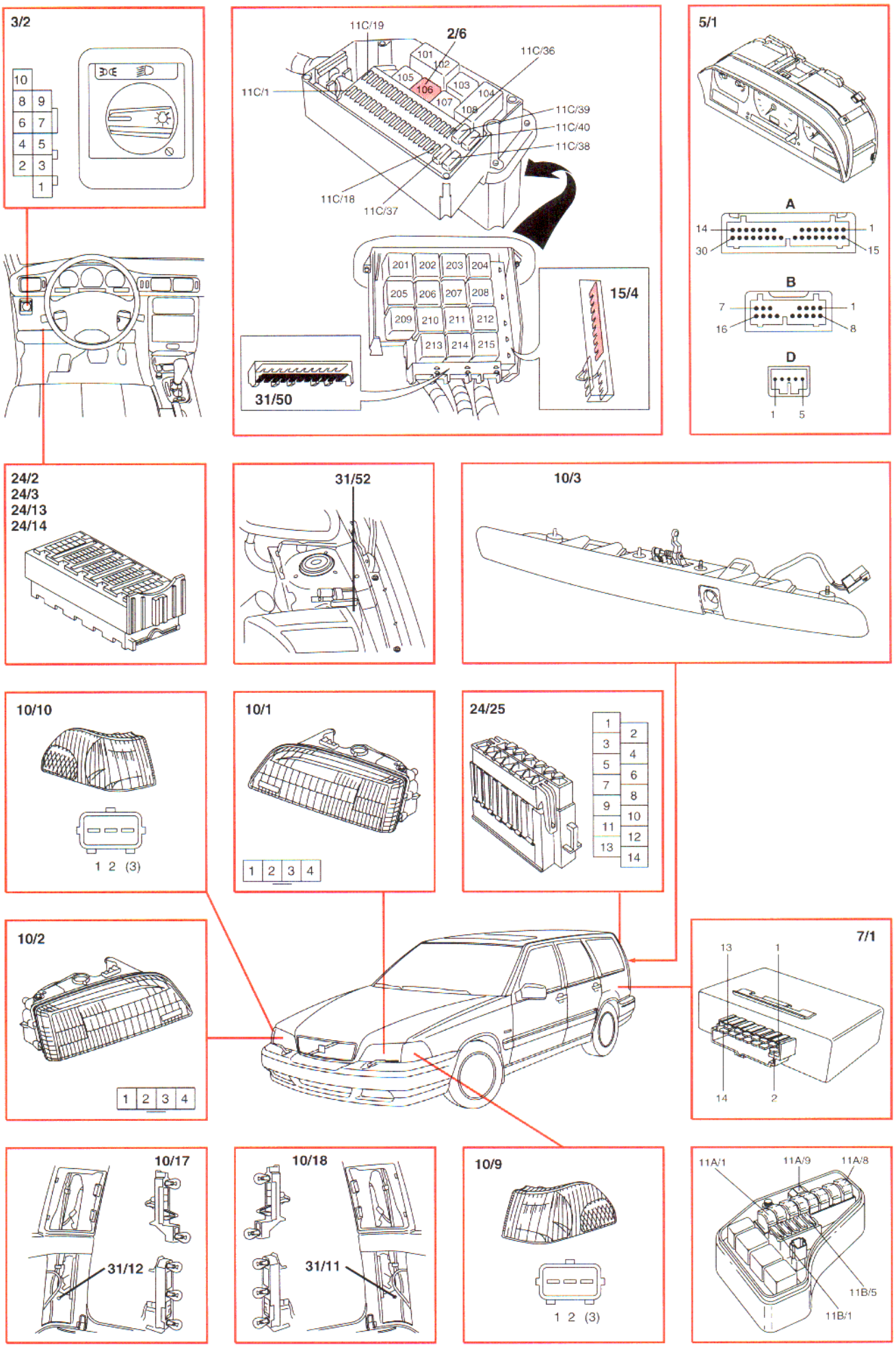

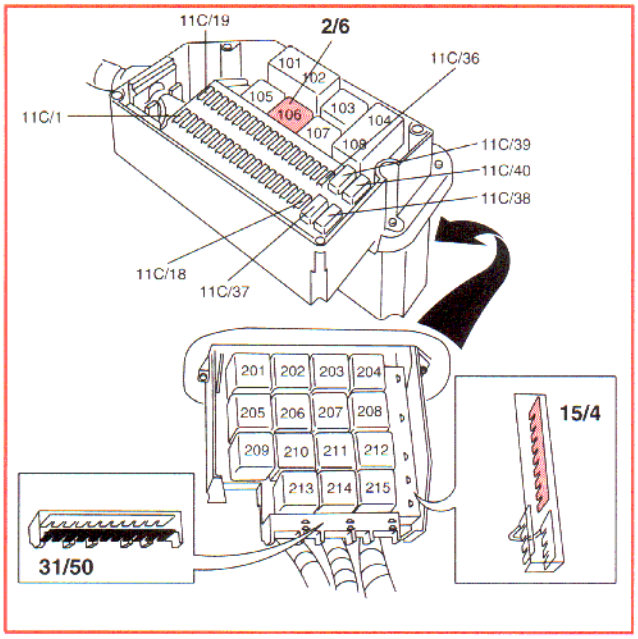
2/6
11C/19
11C/36
11C/1
11C/39
11C/40
11C/38
11C/18
11C/37
101
102
103
104
105
106
107
109
201
202
203
204
205
206
207
208
209
210
211
212
213
214
215
15/4
31/50

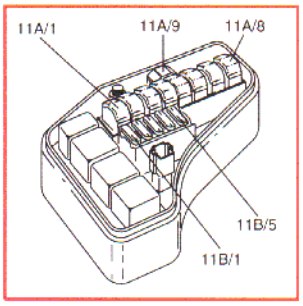
11A/1
11A/9
11A/8
11B/5
11B/1

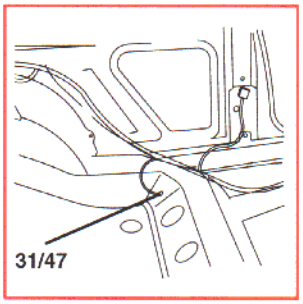
31/47

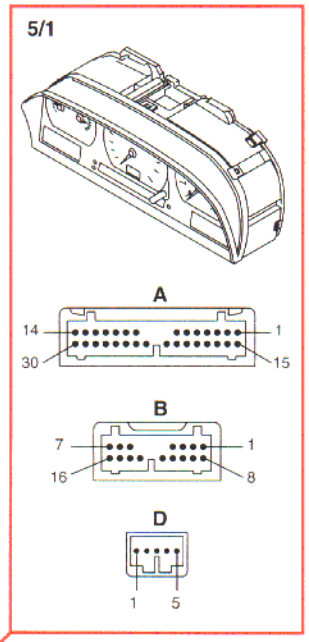
5/1
A
14
1
30
15
B
7
1
16
8
D
1
5

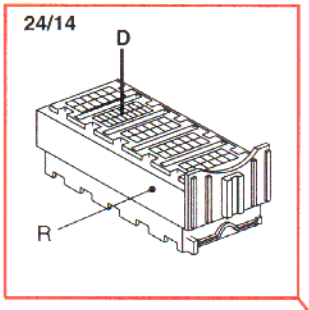
24/14
D
R

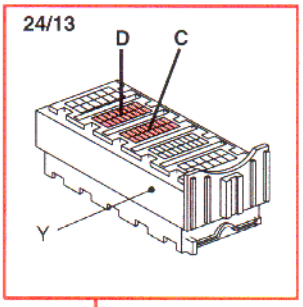
24/13
D
C
Y

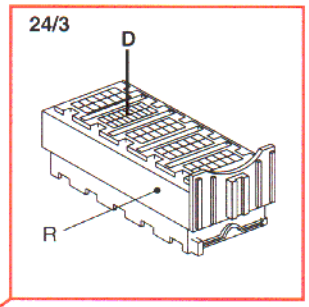
24/3
D
R

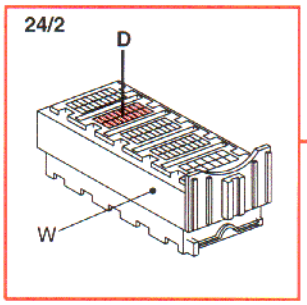
24/2
D
W

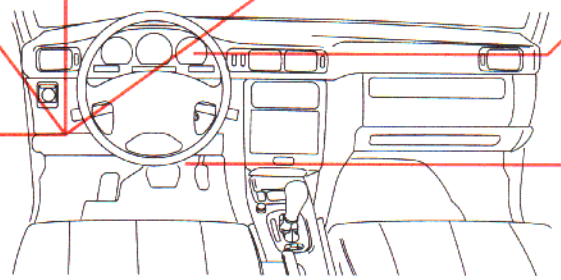

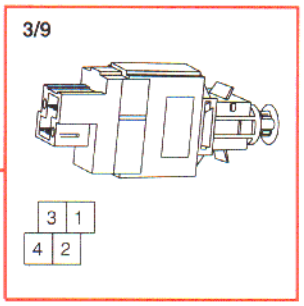
3/9
3
1
4
2

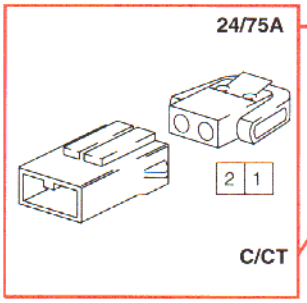
24/75A
2
1
C/CT

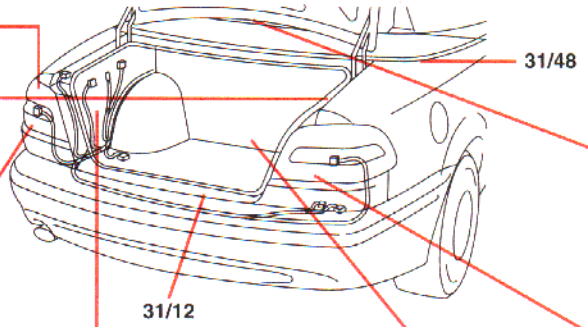
31/48
31/12

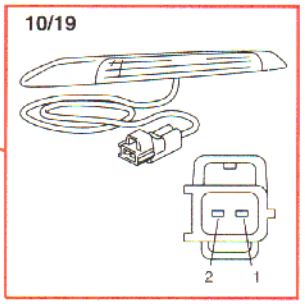
10/19
2
1

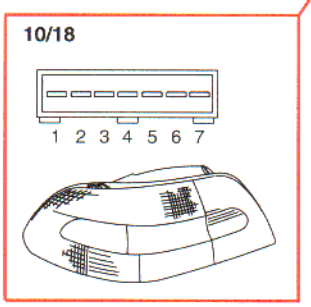
10/18
1 2 3 4 5 6 7

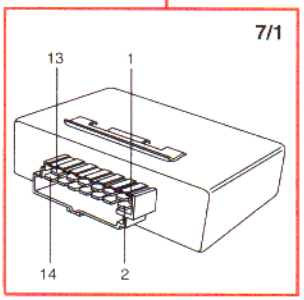
7/1
13
1
14
2

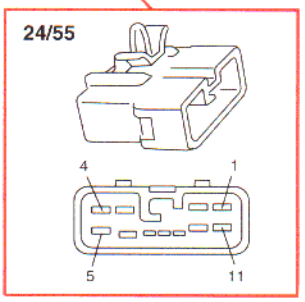
24/55
4
1
5
11

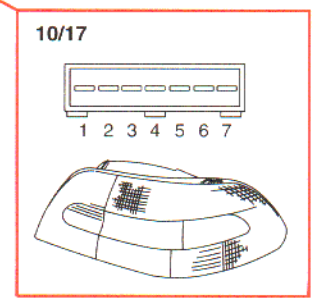
10/17
1 2 3 4 5 6 7

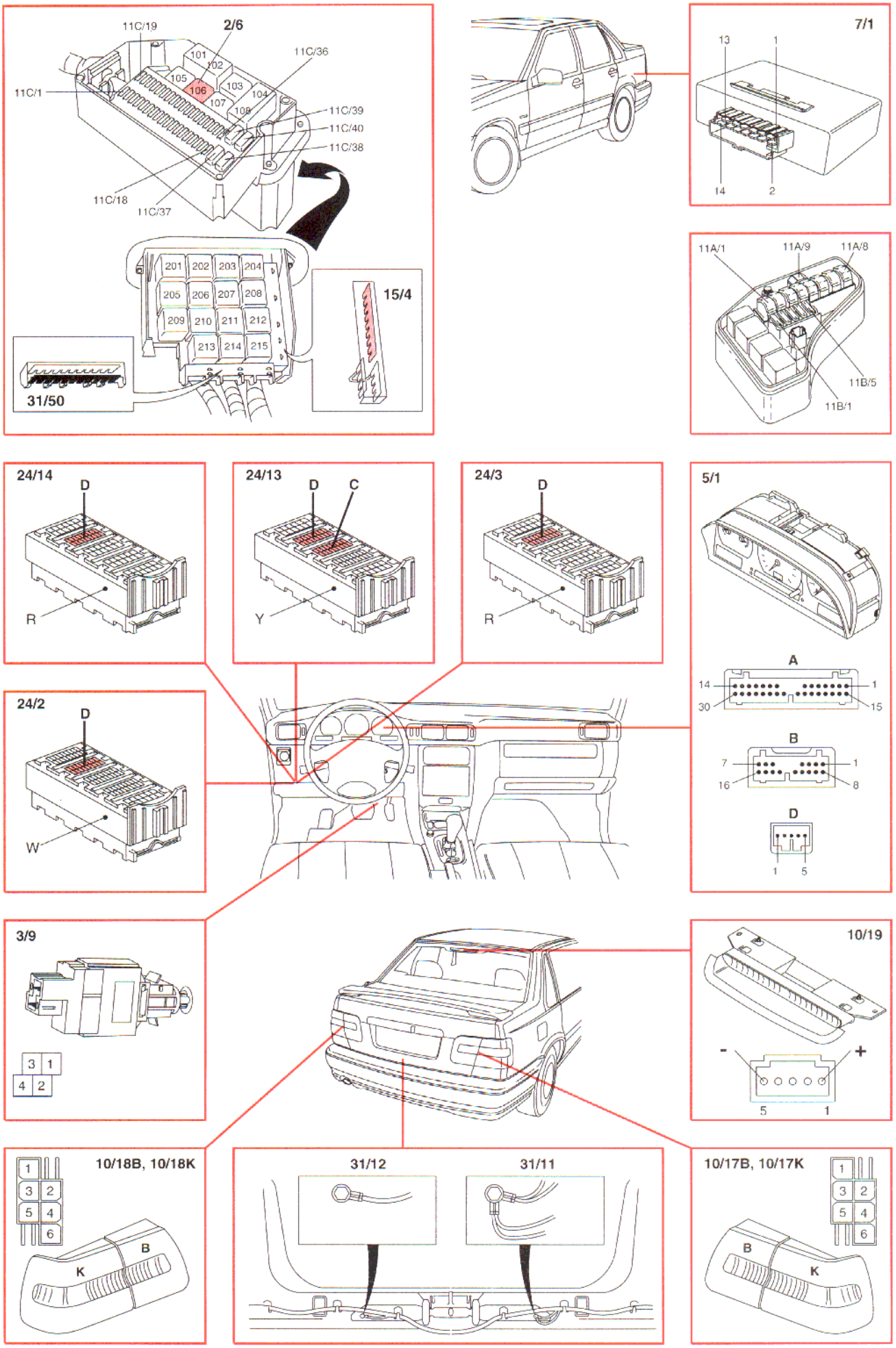
2/6
11C/19
11C/36
11C/1
101
102
103
104
105
106
107
108
11C/39
11C/40
11C/38
11C/18
11C/37
201
202
203
204
205
206
207
208
209
210
211
212
213
214
215
15/4
31/50
7/1
13
1
14
2
11A/1
11A/9
11A/8
11B/5
11B/1
24/14
D
R
24/13
D
C
Y
24/3
D
R
5/1
A
14
1
30
15
B
7
1
16
8
D
1
5
24/2
D
W
3/9
3
1
4
2
10/19
-
+
5
1
10/18B, 10/18K
1
3
2
5
4
6
B
K
31/12
31/11
10/17B, 10/17K
1
3
2
5
4
6
B
K

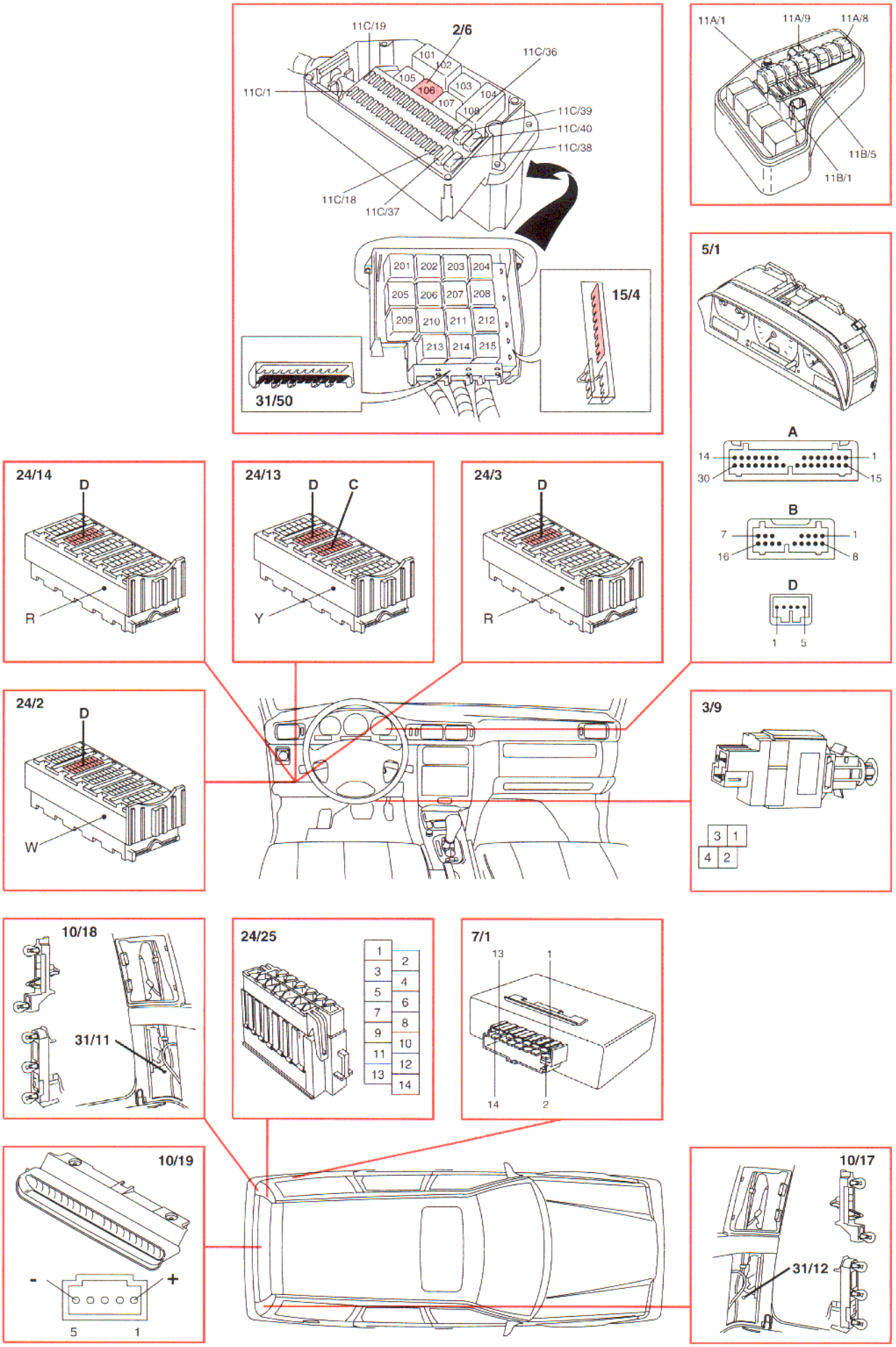
2/6
11C/19
11C/36
11C/1
101
102
103
104
105
106
107
108
11C/39
11C/40
11C/38
11C/18
11C/37
201
202
203
204
205
206
207
208
209
210
211
212
213
214
215
15/4
31/50
11A/1
11A/9
11A/8
11B/5
11B/1
5/1
A
14
1
30
15
B
7
1
16
8
D
1
5
24/14
D
R
24/13
D
C
Y
24/3
D
R
24/2
D
W
3/9
3
1
4
2
10/18
31/11
24/25
1
2
3
4
5
6
7
8
9
10
11
12
13
14
7/1
13
1
14
2
10/19
-
+
5
1
10/17
31/12

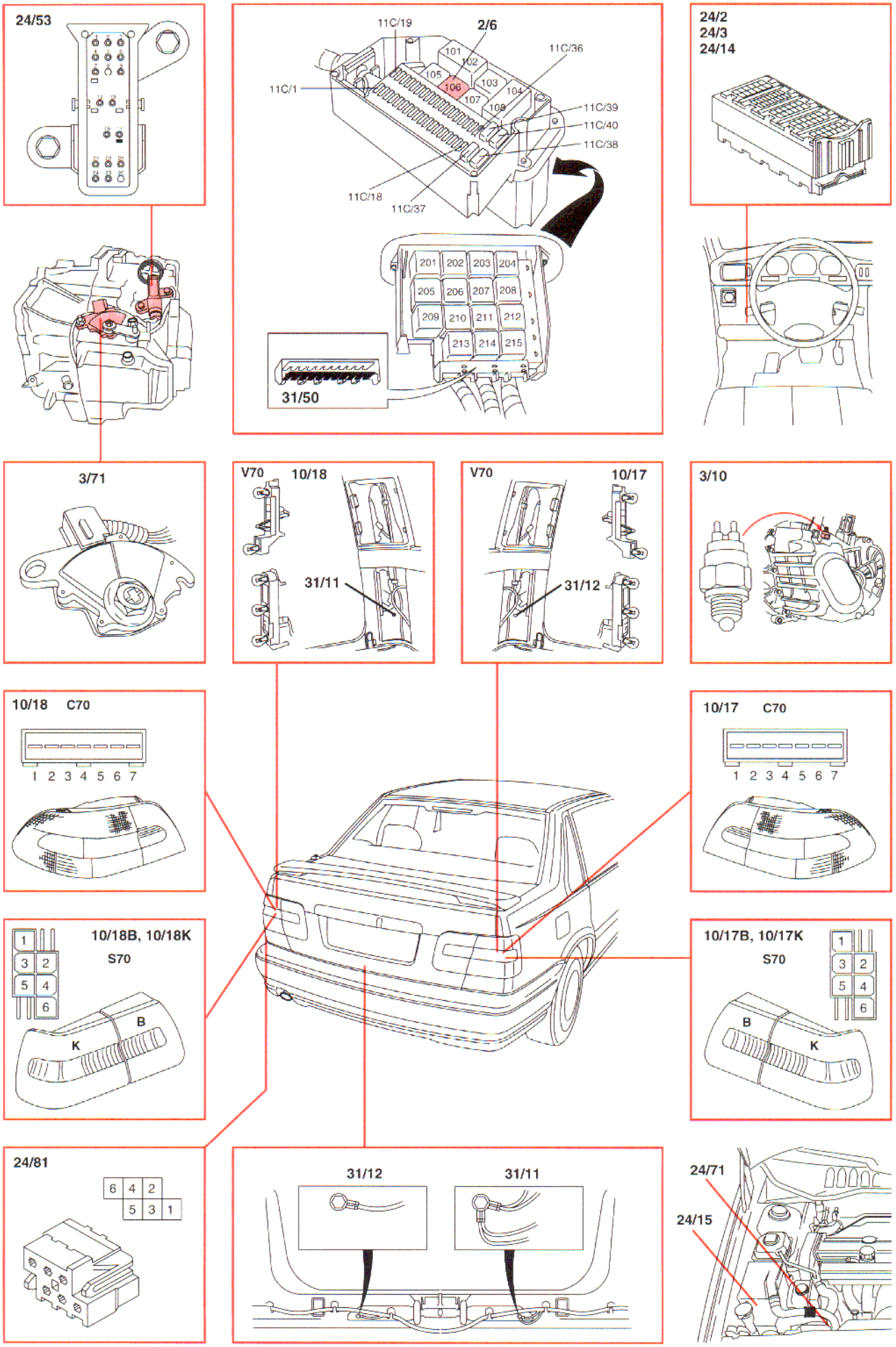
24/53
11C/19
2/6
11C/36
11C/1
101
102
103
104
105
106
107
108
11C/39
11C/40
11C/38
11C/18
11C/37
201
202
203
204
205
206
207
208
209
210
211
212
213
214
215
31/50
24/2
24/3
24/14
3/71
V70
10/18
31/11
V70
10/17
31/12
3/10
10/18 C70
1 2 3 4 5 6 7
10/17 C70
1 2 3 4 5 6 7
10/18B, 10/18K
S70
K
B
10/17B, 10/17K
S70
B
K
24/81
6 4 2
5 3 1
31/12
31/11
24/71
24/15

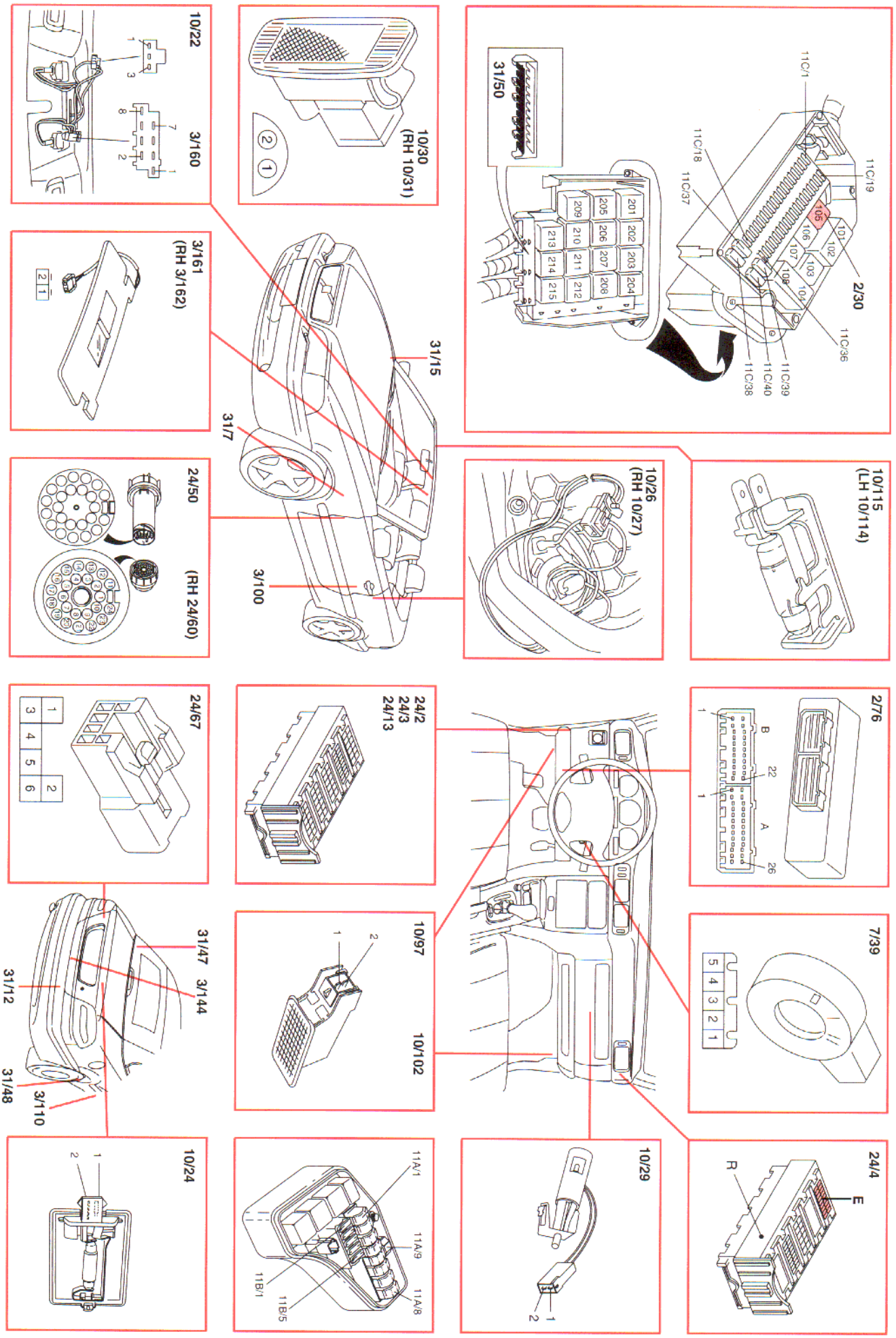
2/30
11C/19
11C/1
11C/18
11C/37
11C/36
11C/39
11C/40
11C/38
101
102
103
104
105
106
107
108
201
202
203
204
205
206
207
208
209
210
211
212
213
214
215
31/50
10/115
(LH 10/114)
10/26
(RH 10/27)
10/30
(RH 10/31)
31/15
31/7
3/100
10/22
3/160
3/161
(RH 3/162)
24/50
(RH 24/60)
2/76
B
A
22
26
7/39
24/4
E
R
24/2
24/3
24/13
10/97
10/102
10/29
11A/1
11A/9
11A/8
11B/1
11B/5
24/67
31/47
3/144
31/12
3/110
31/48
10/24

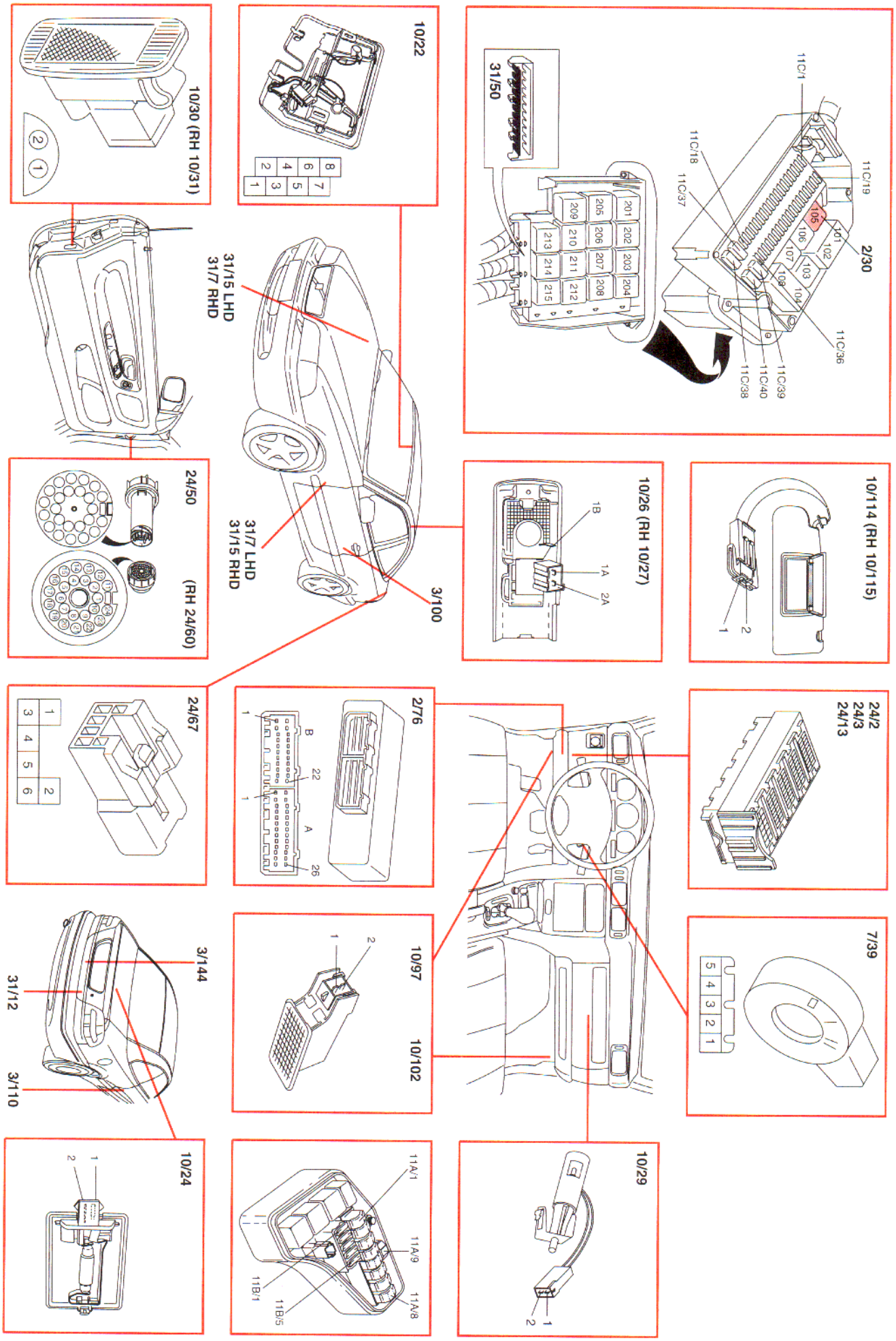
2/30
11C/1
11C/19
11C/18
11C/37
11C/36
11C/39
11C/40
11C/38
101 102 103 104 105 106 107 108
201 202 203 204 205 206 207 208 209 210 211 212 213 214 215
31/50
10/22
8 7 6 5 4 3 2 1
10/30 (RH 10/31)
2 1
31/15 LHD
31/7 RHD
31/7 LHD
31/15 RHD
3/100
24/50
(RH 24/60)
10/26 (RH 10/27)
1B
1A
2A
10/114 (RH 10/115)
2
1
24/2
24/3
24/13
7/39
5 4 3 2 1
24/67
1 2 3 4 5 6
2/76
B
22
A
26
1
10/97
10/102
2
1
3/144
31/12
3/110
10/24
1
2
10/29
1
2
11A/1
11A/9
11A/8
11B/1
11B/5

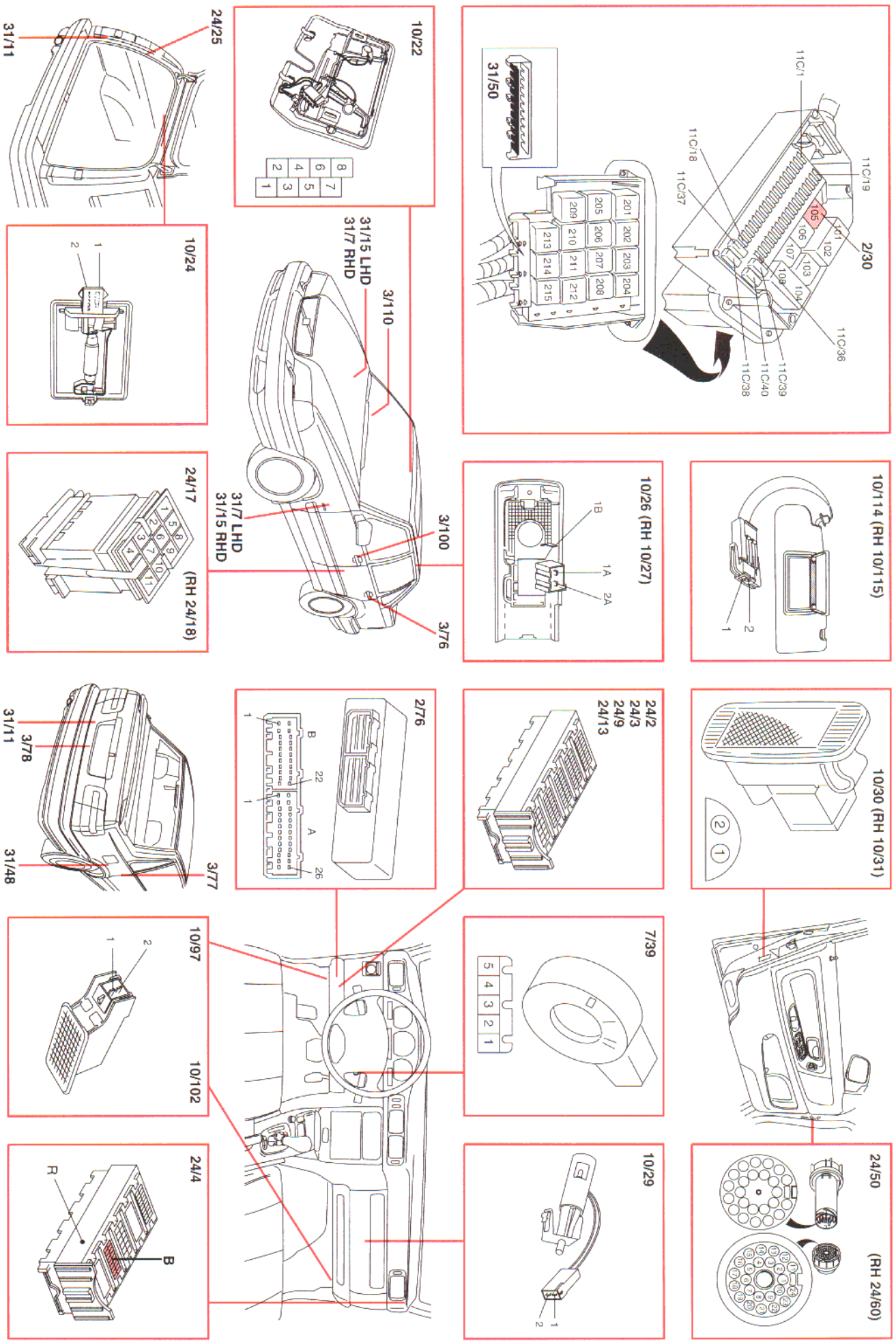
2/30
11C/19
11C/36
11C/39
11C/40
11C/38
11C/18
11C/37
11C/1
31/50
10/22
24/25
31/11
10/24
31/15 LHD
31/7 RHD
3/110
31/7 LHD
31/15 RHD
3/100
3/76
24/17
(RH 24/18)
10/114 (RH 10/115)
10/26 (RH 10/27)
10/30 (RH 10/31)
24/2
24/3
24/9
24/13
2/76
3/78
31/11
31/48
3/77
7/39
10/97
10/102
10/29
24/50
(RH 24/60)
24/4

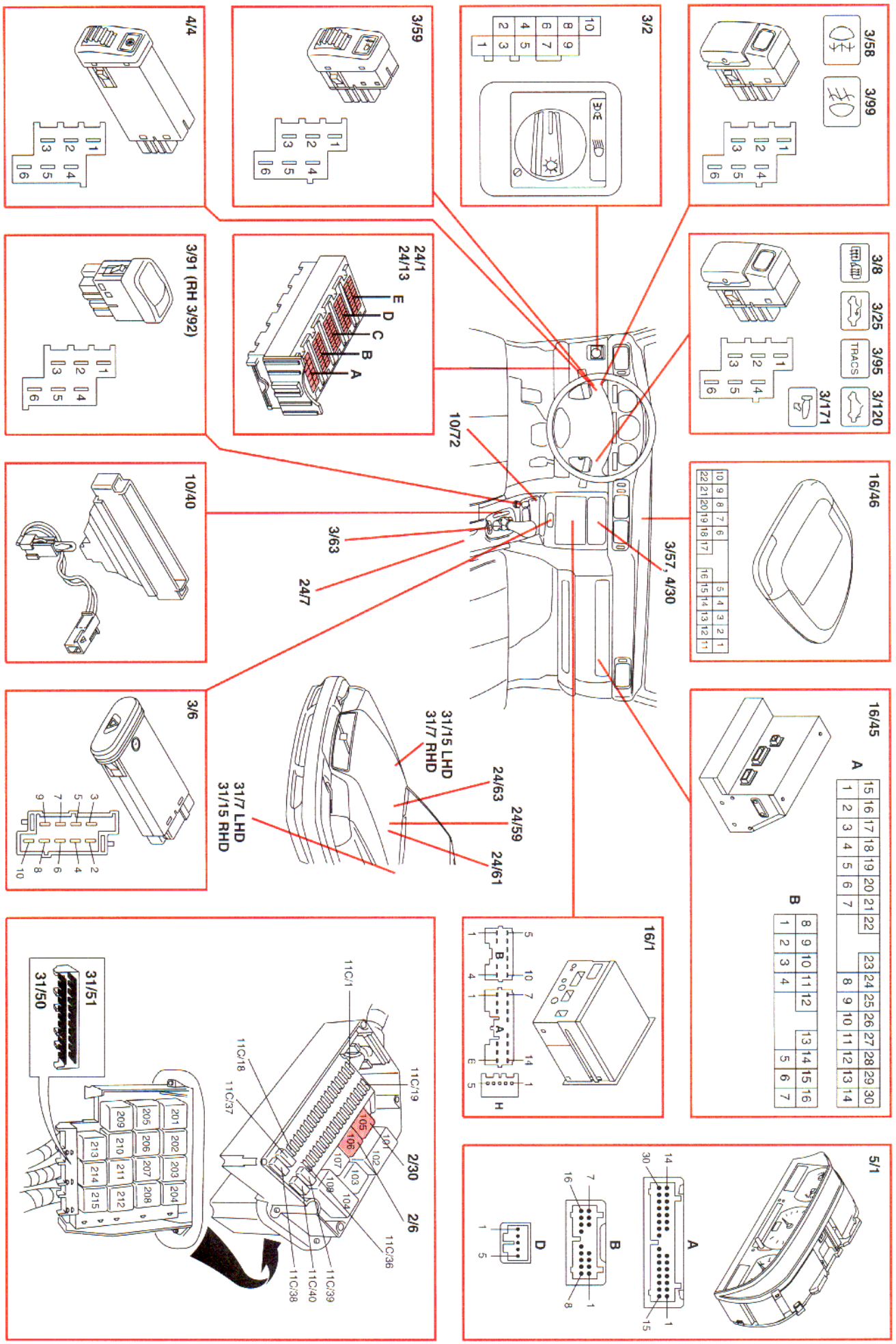
3/58
3/99
3/2
3/59
4/4
3/8
3/25
3/95
3/120
3/171
TRACS
24/1
24/13
3/91 (RH 3/92)
16/46
3/57, 4/30
10/72
10/40
3/63
24/7
16/45
31/15 LHD
31/7 RHD
24/63
24/59
24/61
31/7 LHD
31/15 RHD
3/6
16/1
5/1
2/30
2/6
11C/19
11C/1
11C/18
11C/37
11C/36
11C/39
11C/40
11C/38
31/51
31/50

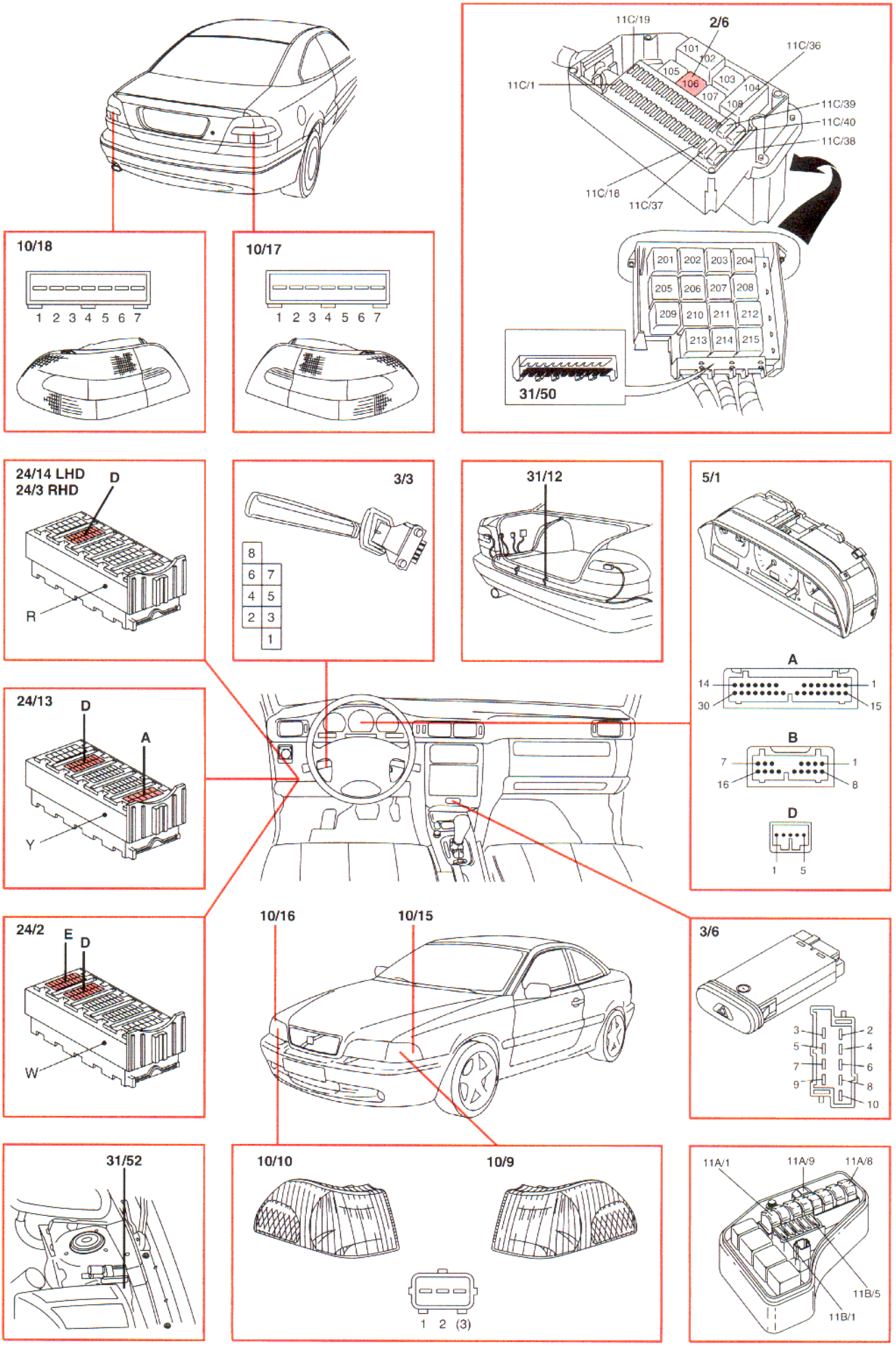
10/18
1 2 3 4 5 6 7
10/17
1 2 3 4 5 6 7
11C/19
2/6
11C/36
11C/1
101
102
103
104
105
106
107
108
11C/39
11C/40
11C/38
11C/18
11C/37
201 202 203 204
205 206 207 208
209 210 211 212
213 214 215
31/50
24/14 LHD
24/3 RHD
D
R
3/3
8
6 7
4 5
2 3
1
31/12
5/1
A
14
1
30
15
B
7
1
16
8
D
1 5
24/13
D
A
Y
24/2
E
D
W
10/16
10/15
3/6
3
2
5
4
7
6
9
8
10
31/52
10/10
10/9
1 2 (3)
11A/1
11A/9
11A/8
11B/5
11B/1

Turn signal lamps and hazard warning signal flashers
S70

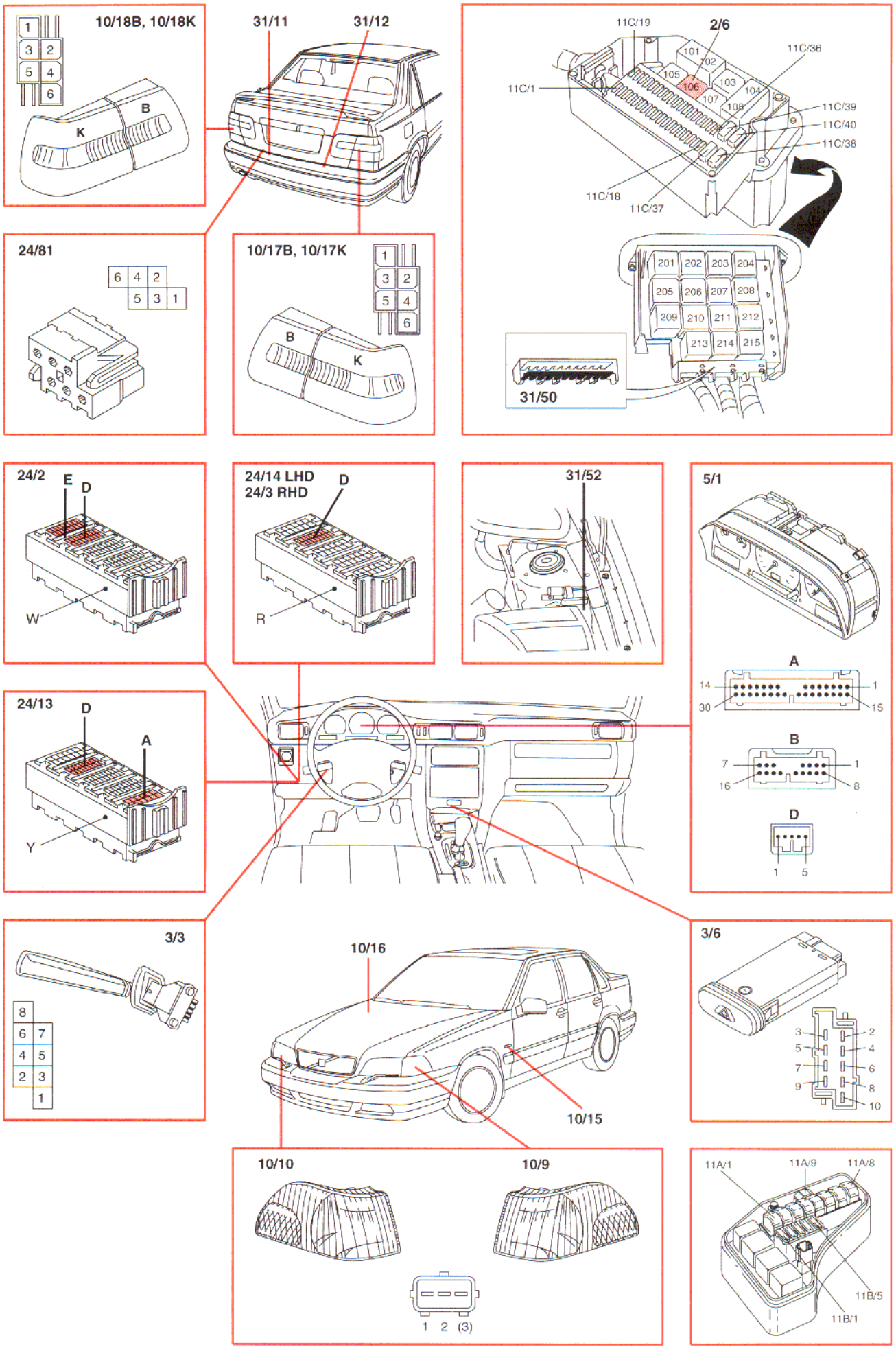

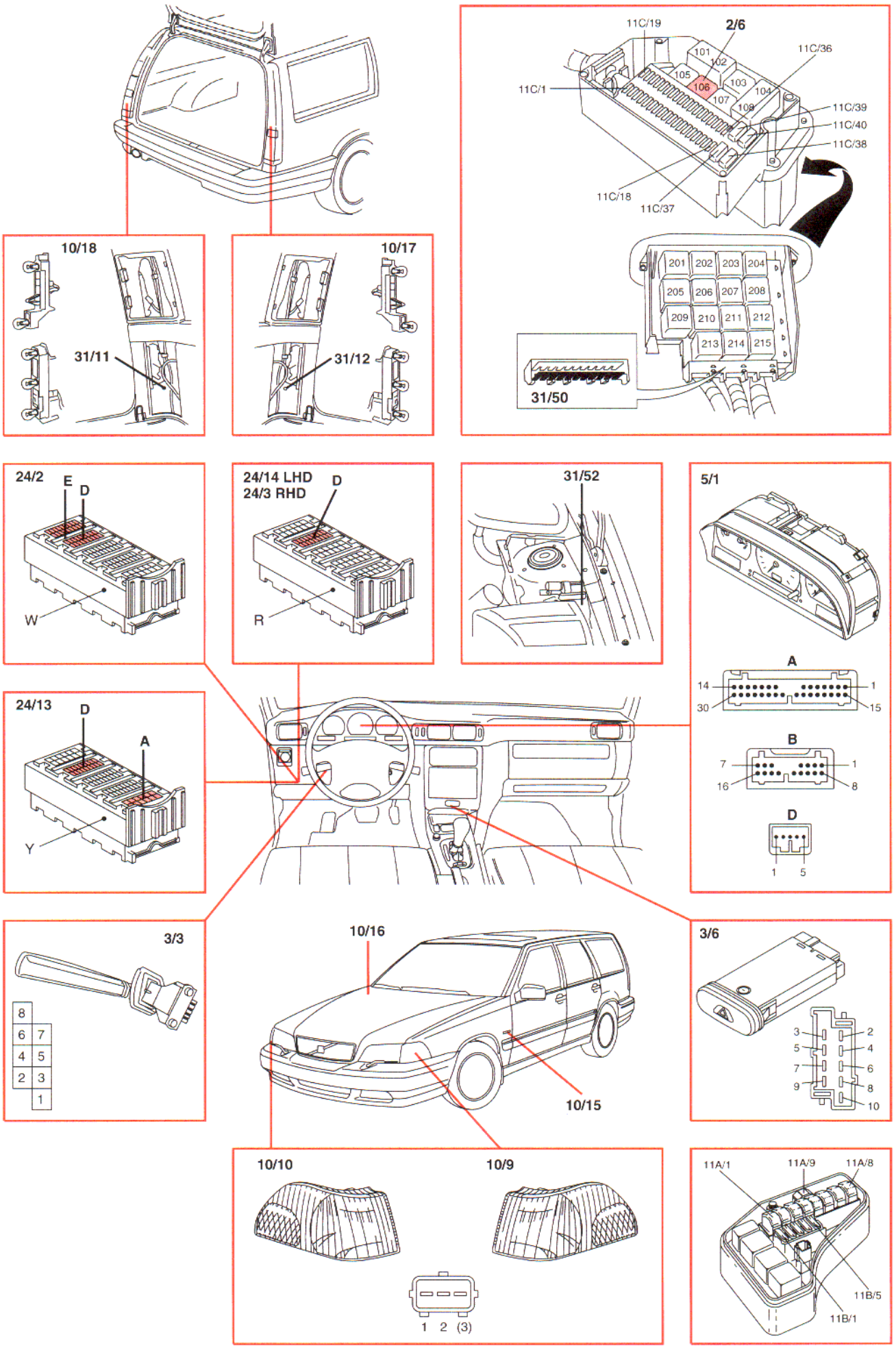
11C/19
2/6
11C/36
101
102
105
106
103
104
107
108
11C/1
11C/39
11C/40
11C/38
11C/18
11C/37
201
202
203
204
205
206
207
208
209
210
211
212
213
214
215
31/50
10/18
31/11
10/17
31/12
24/2
E
D
W
24/14 LHD
24/3 RHD
D
R
31/52
5/1
A
14
1
30
15
B
7
1
16
8
D
1
5
24/13
D
A
Y
3/3
8
6
7
4
5
2
3
1
10/16
10/15
3/6
3
2
5
4
7
6
9
8
10
10/10
10/9
1
2
(3)
11A/1
11A/9
11A/8
11B/5
11B/1

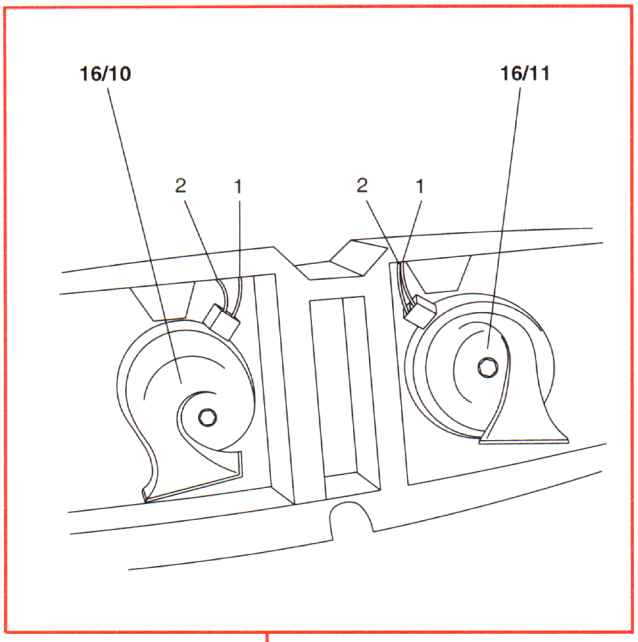
16/10
16/11
2
1
2
1

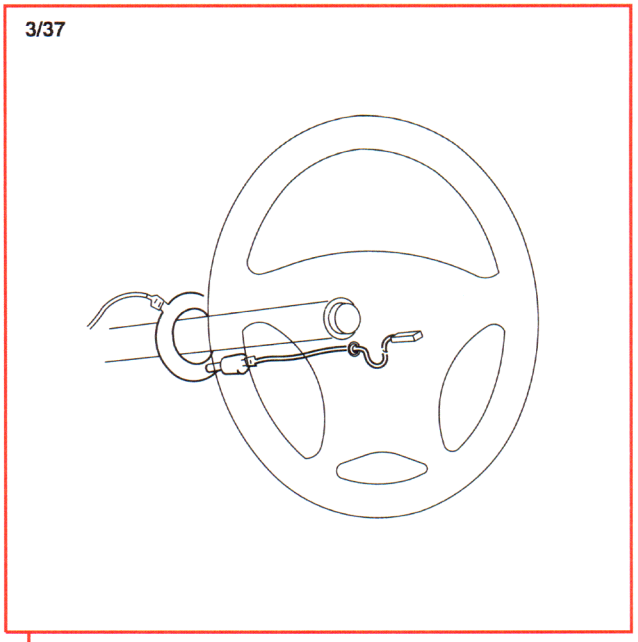
3/37

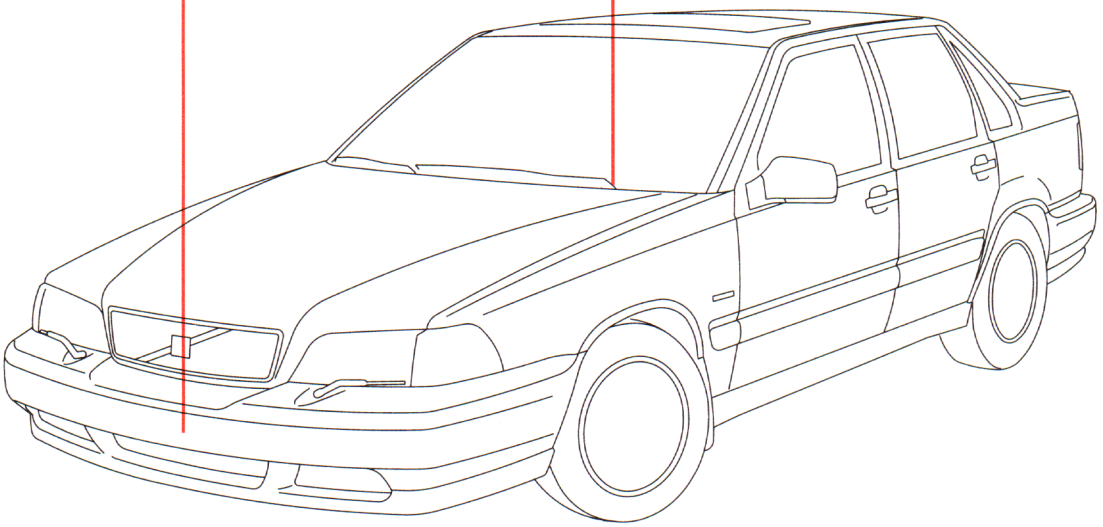

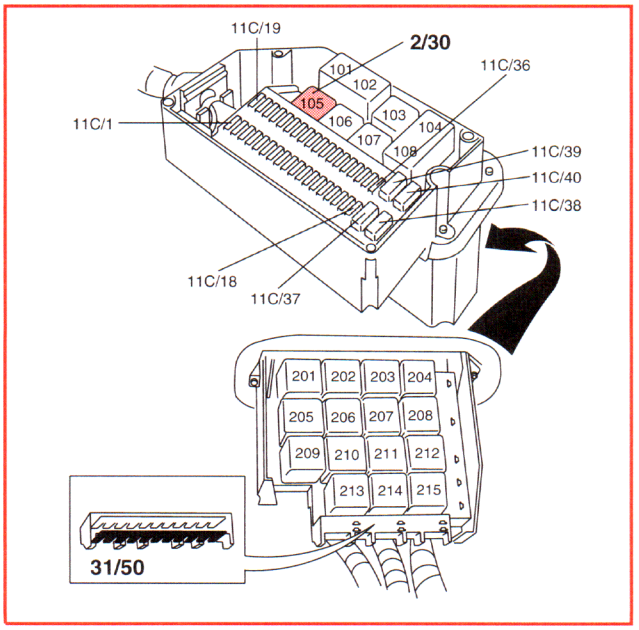
11C/19
2/30
11C/36
101
102
105
106
103
104
107
108
11C/1
11C/39
11C/40
11C/38
11C/18
11C/37
201
202
203
204
205
206
207
208
209
210
211
212
213
214
215
31/50

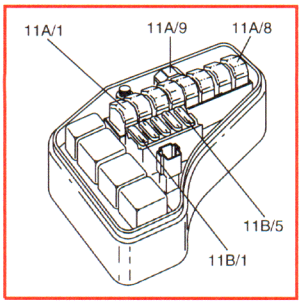
11A/1
11A/9
11A/8
11B/5
11B/1

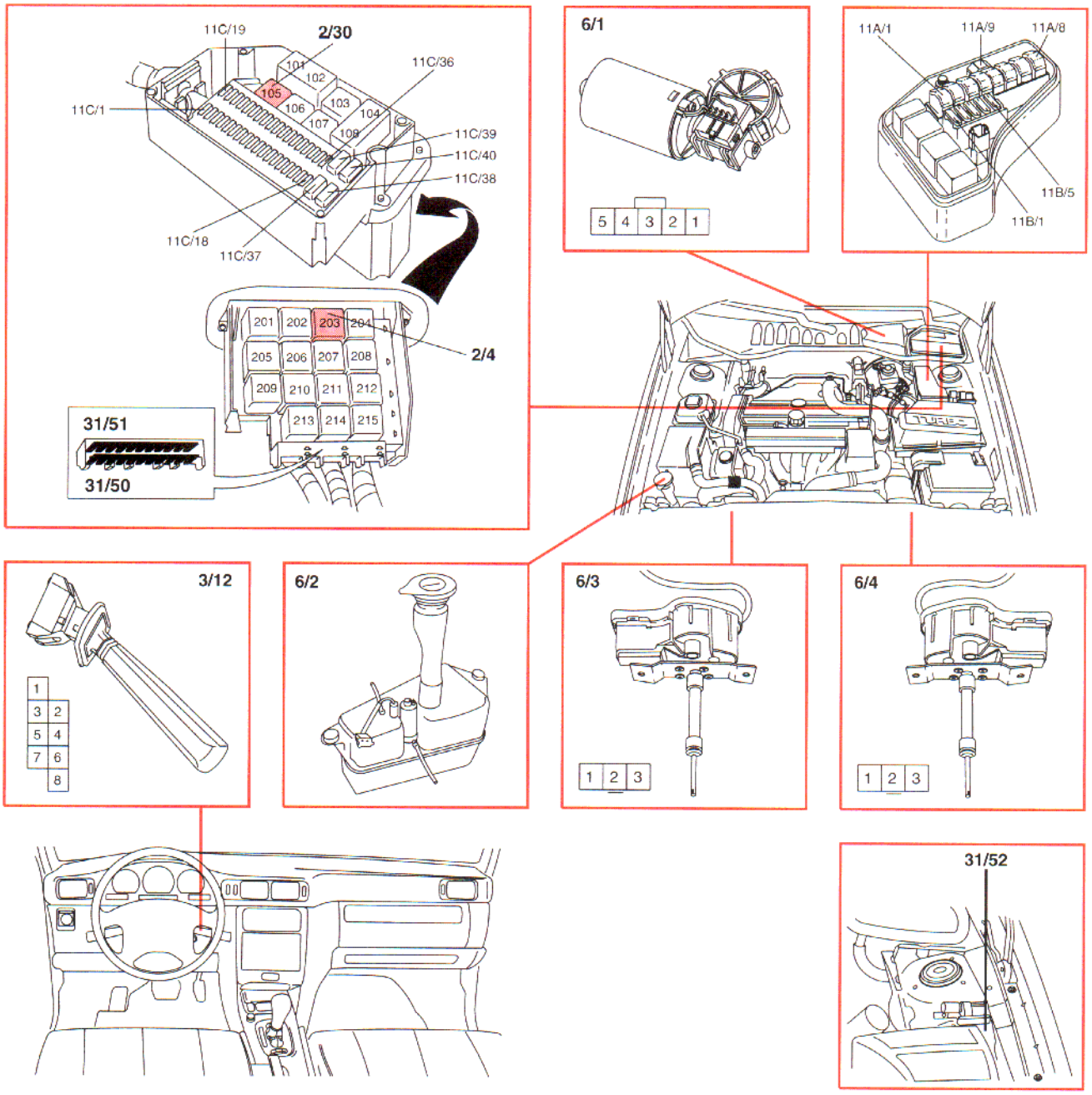
11C/19
2/30
11C/36
11C/1
101
102
105
106
103
104
107
108
11C/39
11C/40
11C/38
11C/18
11C/37
201
202
203
204
205
206
207
208
209
210
211
212
213
214
215
2/4
31/51
31/50
6/1
5 4 3 2 1
11A/1
11A/9
11A/8
11B/5
11B/1
3/12
1
3 2
5 4
7 6
8
6/2
6/3
1 2 3
6/4
1 2 3
31/52

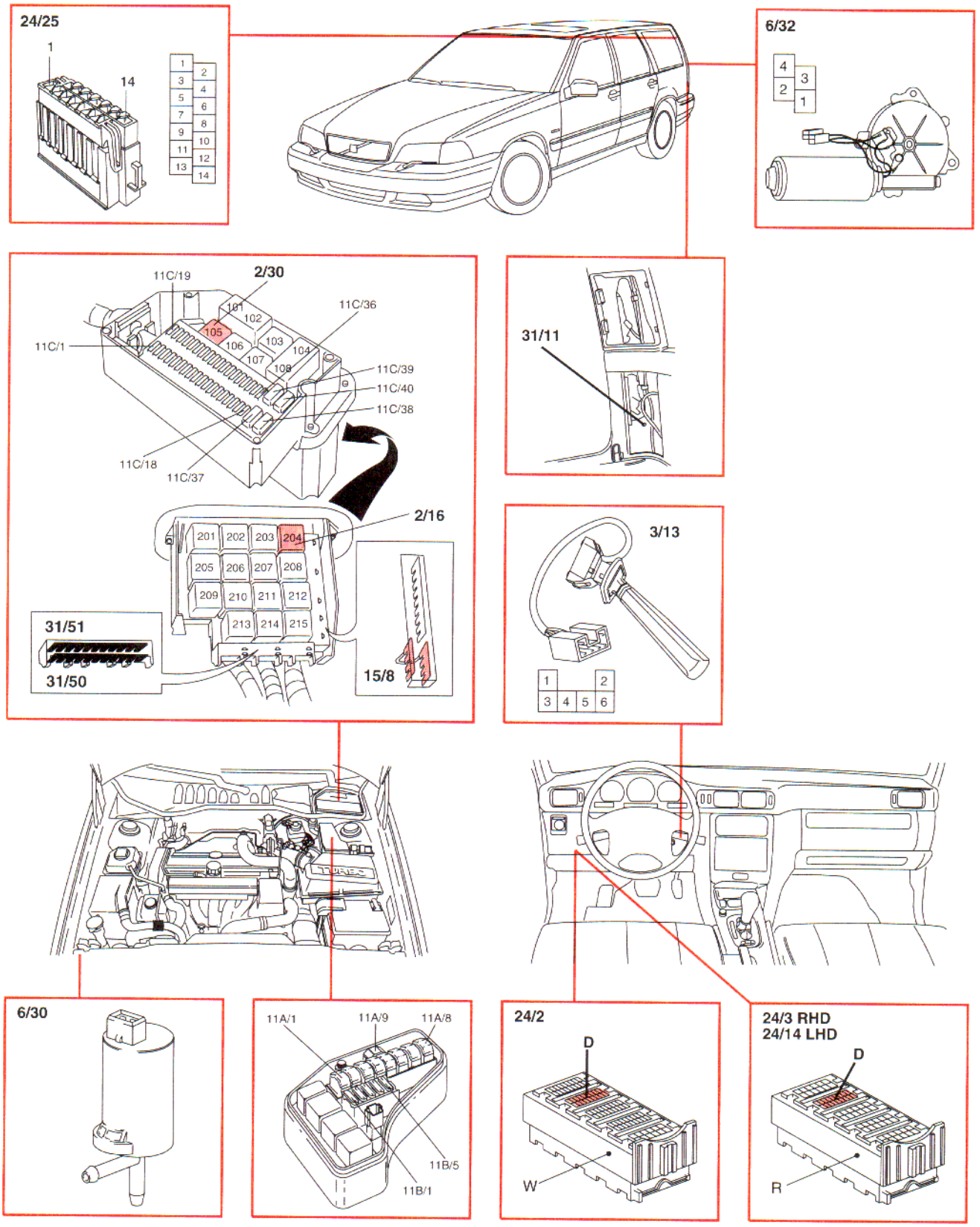
24/25
1
14
1 2 3 4 5 6 7 8 9 10 11 12 13 14
6/32
4 3 2 1
11C/19
2/30
101 102 103 104 105 106 107 108
11C/36
11C/1
11C/39
11C/40
11C/38
11C/18
11C/37
31/11
2/16
201 202 203 204 205 206 207 208 209 210 211 212 213 214 215
31/51
31/50
15/8
3/13
1 2 3 4 5 6
6/30
11A/1
11A/9
11A/8
11B/5
11B/1
24/2
D
W
24/3 RHD
24/14 LHD
D
R

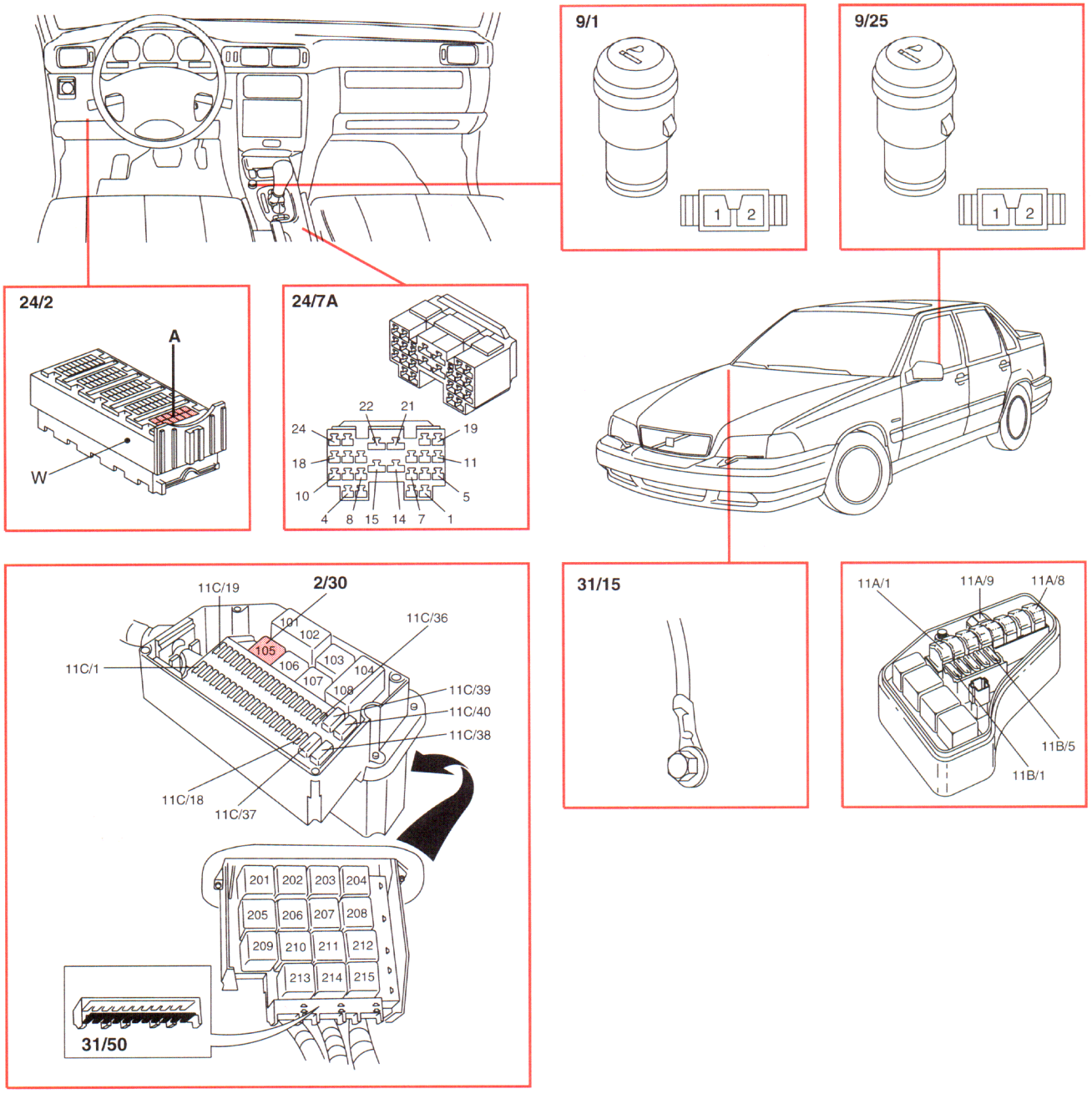
9/1
1
2
9/25
1
2
24/2
A
W
24/7A
22
21
24
19
18
11
10
5
4
8
15
14
7
1
31/15
11A/1
11A/9
11A/8
11B/5
11B/1
2/30
11C/19
11C/36
11C/1
101
102
105
106
103
104
107
108
11C/39
11C/40
11C/38
11C/18
11C/37
201
202
203
204
205
206
207
208
209
210
211
212
213
214
215
31/50

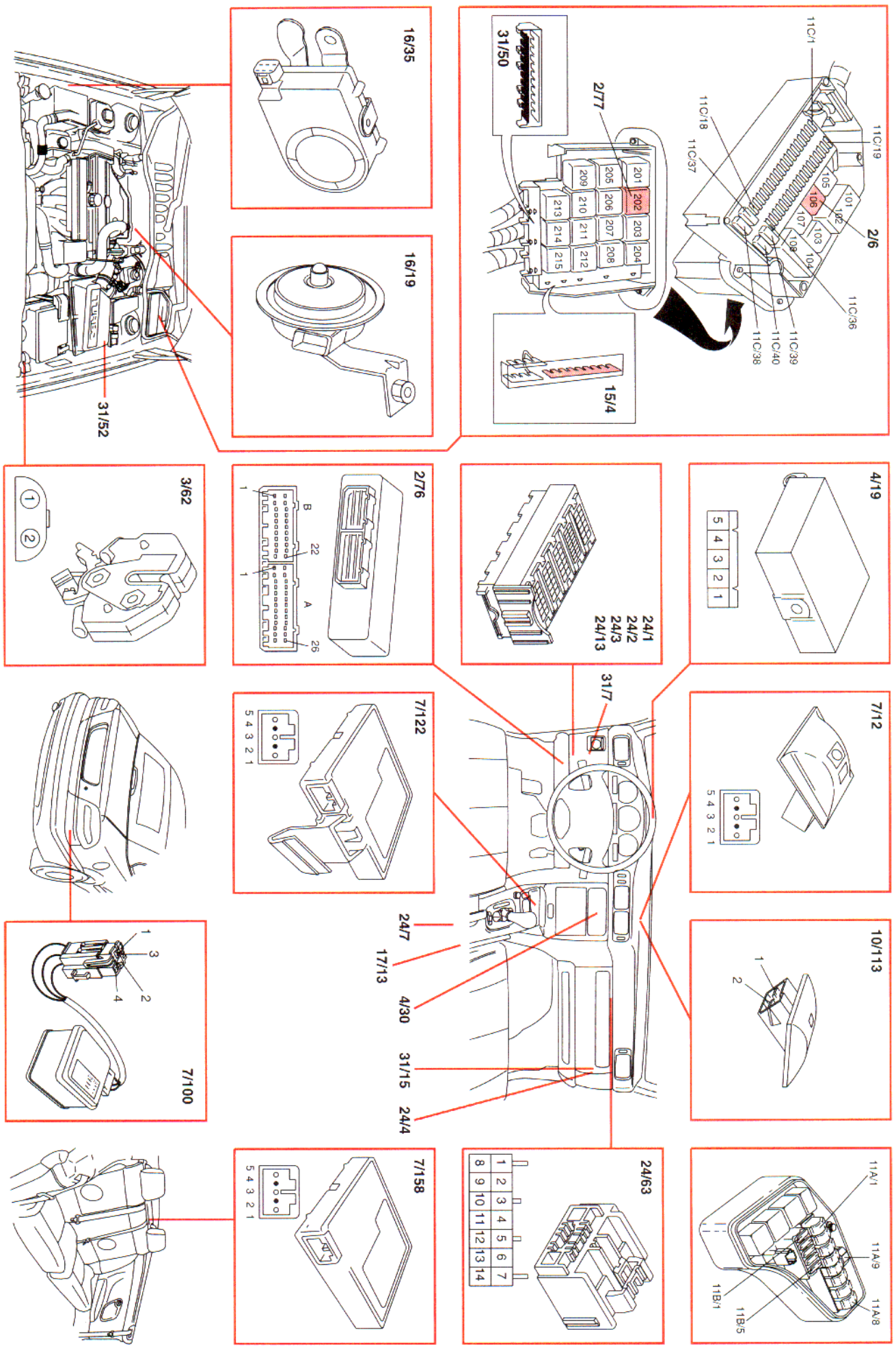
2/6
11C/1
11C/19
11C/18
11C/37
11C/36
11C/39
11C/40
11C/38
101
102
103
104
105
106
107
108
2/77
201
202
203
204
205
206
207
208
209
210
211
212
213
214
215
31/50
15/4
16/35
16/19
31/52
4/19
5 4 3 2 1
24/1
24/2
24/3
24/13
2/76
B
A
22
26
1
3/62
1
2
7/12
5 4 3 2 1
31/7
7/122
5 4 3 2 1
10/113
1
2
24/7
17/13
4/30
31/15
24/4
7/100
1
2
3
4
24/63
1 2 3 4 5 6 7
8 9 10 11 12 13 14
7/158
5 4 3 2 1
11A/1
11A/9
11A/8
11B/1
11B/5

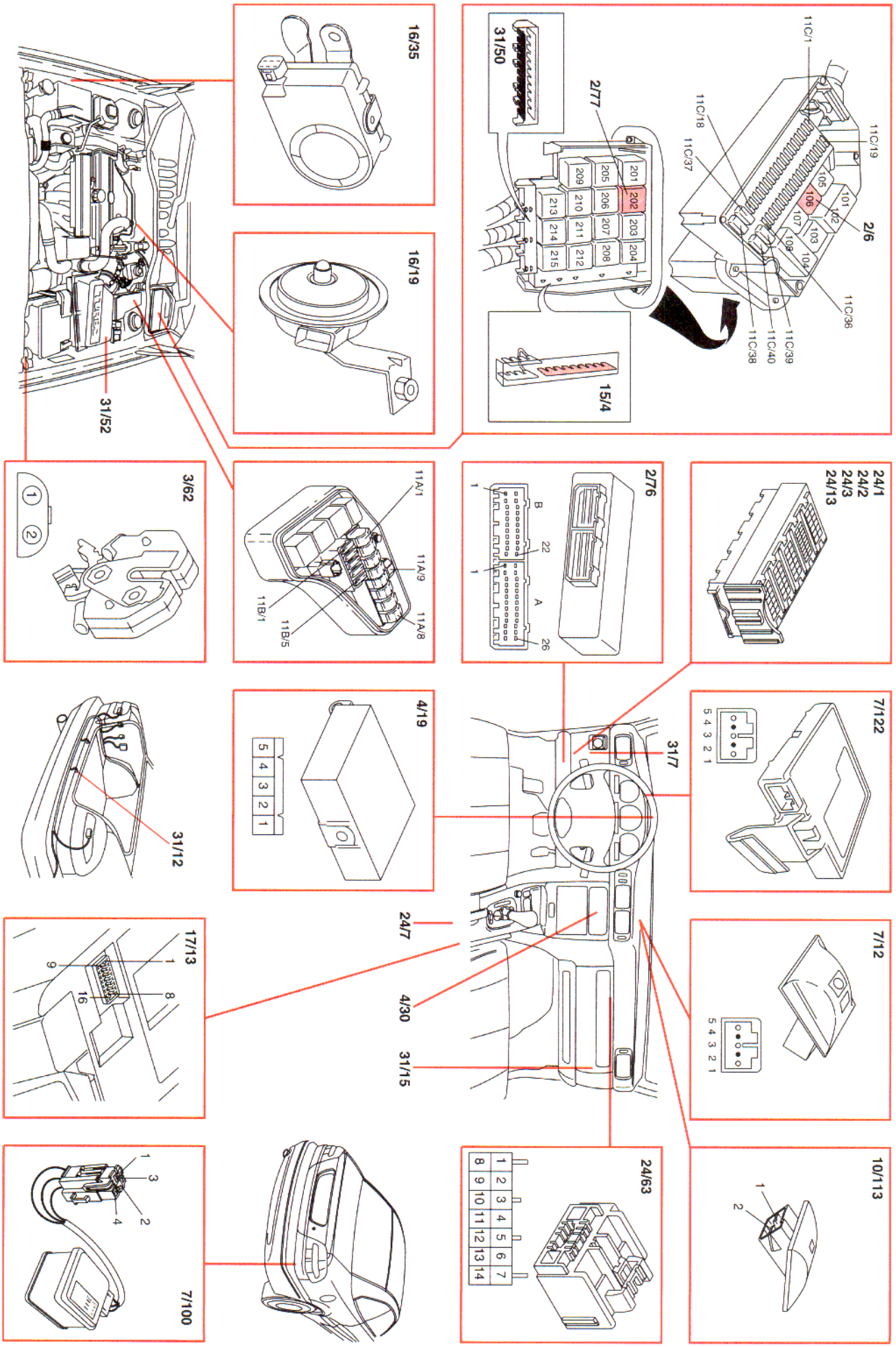
2/6
11C/19
11C/1
11C/18
11C/37
11C/36
11C/39
11C/40
11C/38
101 102 103 104 105 106 107 108
2/77
201 202 203 204 205 206 207 208 209 210 211 212 213 214 215
31/50
15/4
16/35
16/19
31/52
24/1
24/2
24/3
24/13
2/76
B 22 1
A 26 1
11A/1
11A/9
11A/8
11B/1
11B/5
3/62
7/122
5 4 3 2 1
31/7
4/19
5 4 3 2 1
31/12
7/12
5 4 3 2 1
24/7
4/30
31/15
17/13
1 8 9 16
10/113
1 2
24/63
1 2 3 4 5 6 7
8 9 10 11 12 13 14
7/100
1 3 2 4

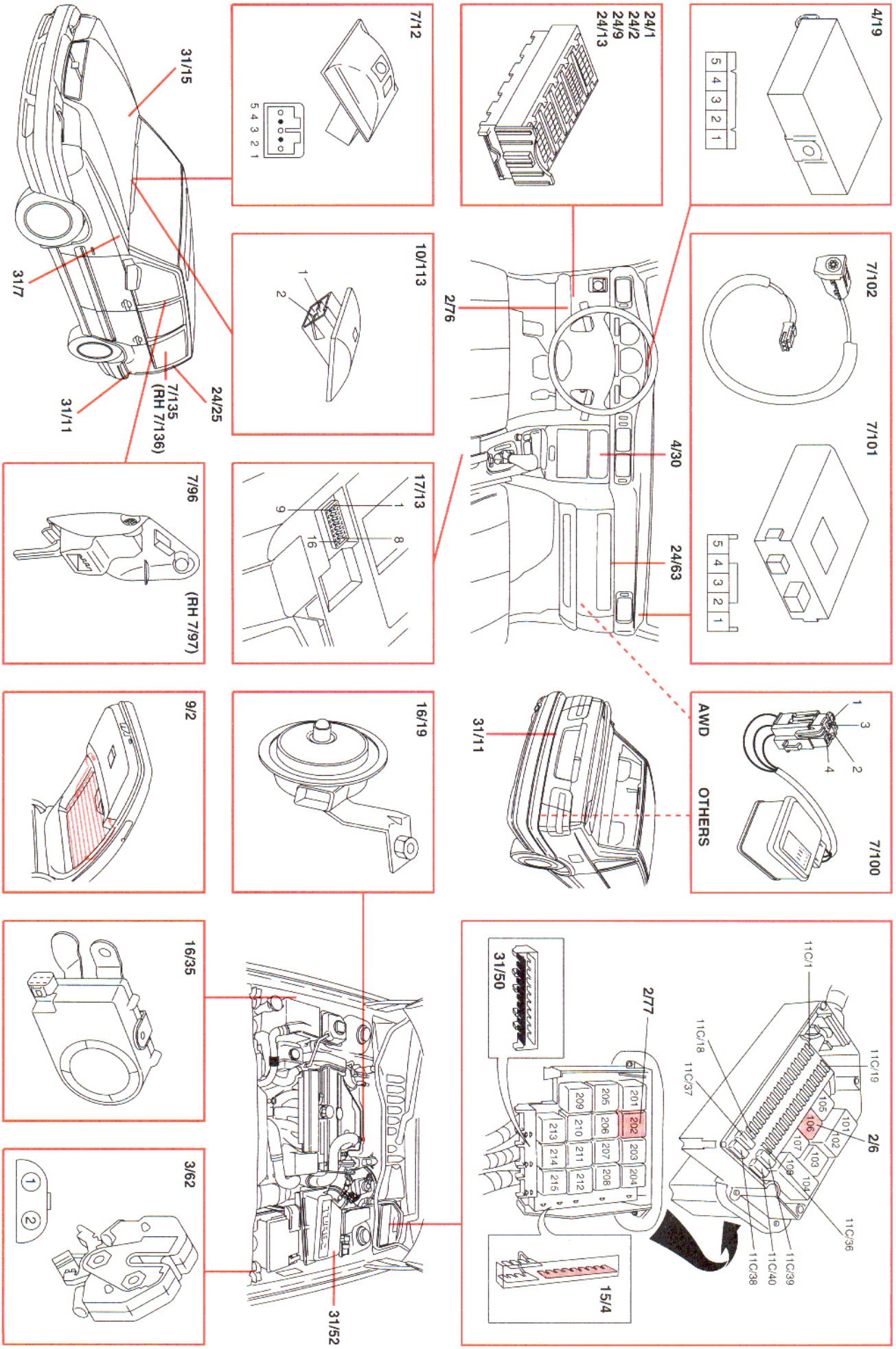
4/19
5 4 3 2 1
7/102
7/101
5 4 3 2 1
24/1
24/2
24/9
24/13
2/76
4/30
24/63
7/12
5 4 3 2 1
10/113
1
2
17/13
1
8
9
16
31/15
31/7
31/11
24/25
7/135
(RH 7/136)
7/96
(RH 7/97)
9/2
16/19
16/35
3/62
1
2
31/11
AWD
OTHERS
7/100
1
3
2
4
11C/1
11C/19
2/6
11C/18
11C/37
11C/36
11C/39
11C/40
11C/38
101
102
103
104
105
106
107
108
2/77
201
202
203
204
205
206
207
208
209
210
211
212
213
214
215
31/50
15/4
31/52

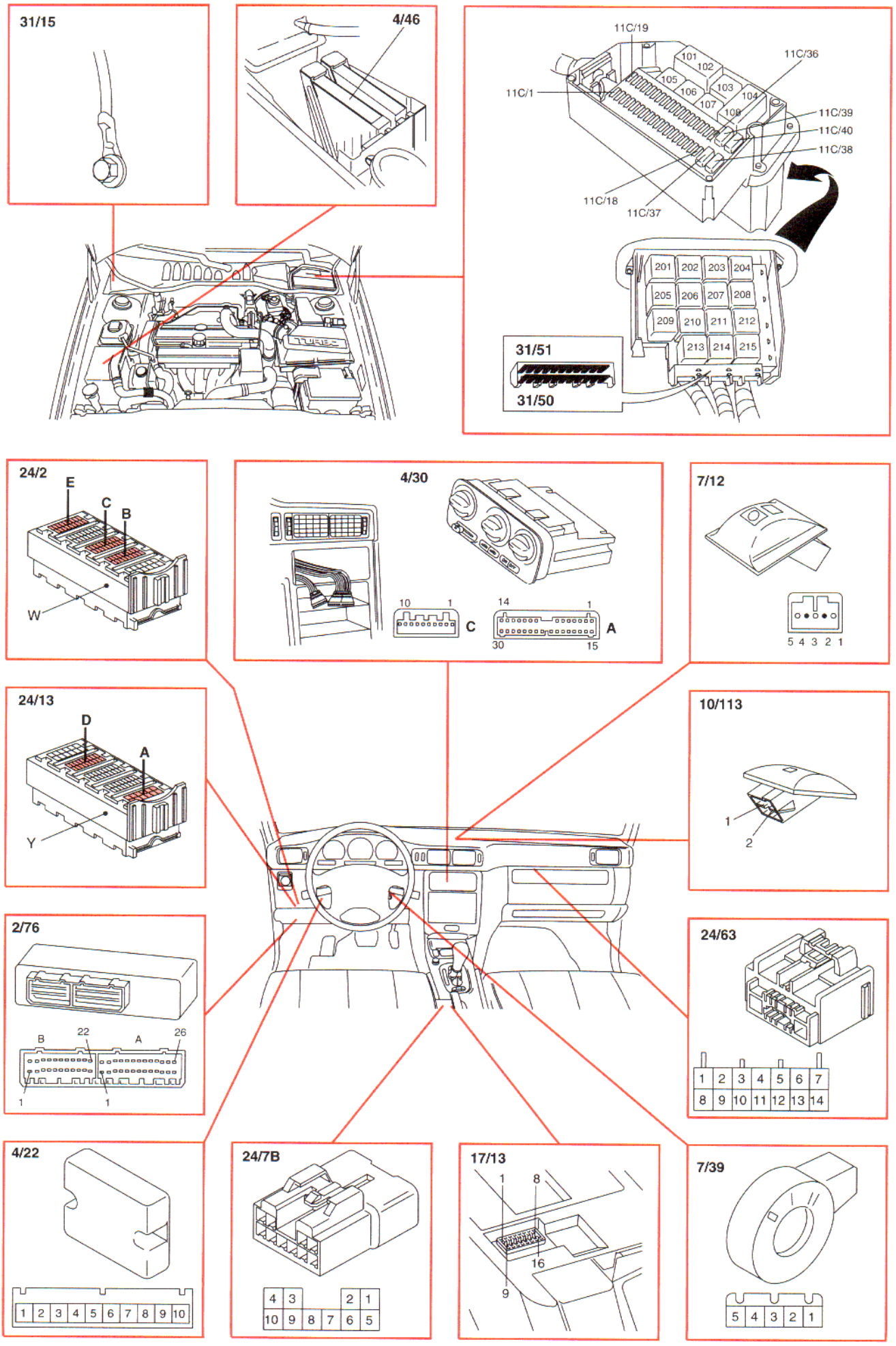
31/15
4/46
11C/19
11C/36
11C/1
101
102
103
104
105
106
107
108
11C/39
11C/40
11C/38
11C/18
11C/37
201
202
203
204
205
206
207
208
209
210
211
212
213
214
215
31/51
31/50
24/2
E
C
B
W
4/30
10
1
C
14
1
A
30
15
7/12
5 4 3 2 1
24/13
D
A
Y
10/113
1
2
2/76
B
22
A
26
1
1
24/63
1 2 3 4 5 6 7
8 9 10 11 12 13 14
4/22
1 2 3 4 5 6 7 8 9 10
24/7B
4 3 2 1
10 9 8 7 6 5
17/13
1
8
16
9
7/39
5 4 3 2 1

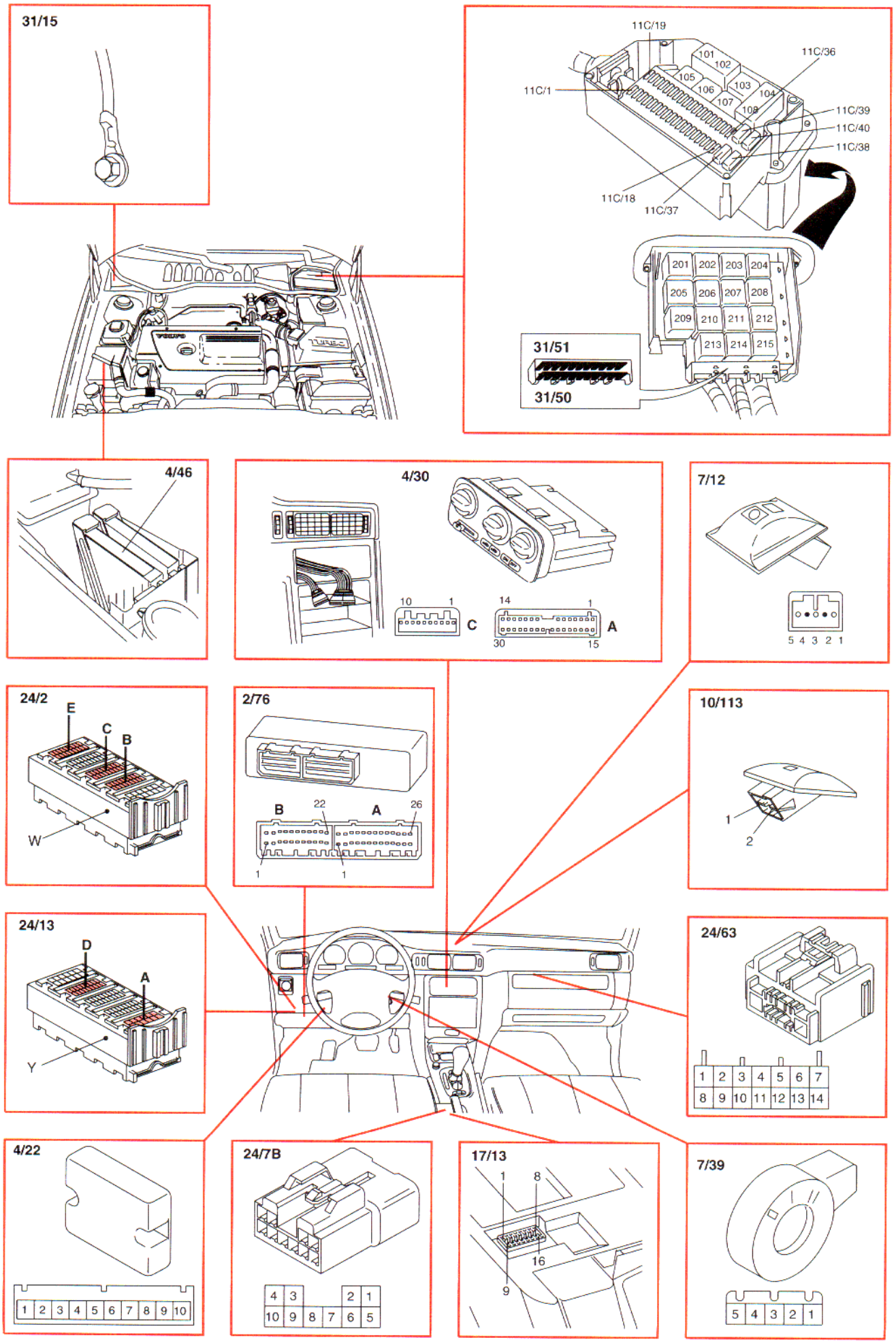
31/15
11C/19
11C/36
11C/1
101
102
103
104
105
106
107
108
11C/39
11C/40
11C/38
11C/18
11C/37
201
202
203
204
205
206
207
208
209
210
211
212
213
214
215
31/51
31/50
4/46
4/30
10
1
C
14
1
A
30
15
7/12
5 4 3 2 1
24/2
E
C
B
W
2/76
B
22
A
26
1
1
10/113
1
2
24/13
D
A
Y
24/63
1 2 3 4 5 6 7
8 9 10 11 12 13 14
4/22
1 2 3 4 5 6 7 8 9 10
24/7B
4 3 2 1
10 9 8 7 6 5
17/13
1
8
16
9
7/39
5 4 3 2 1

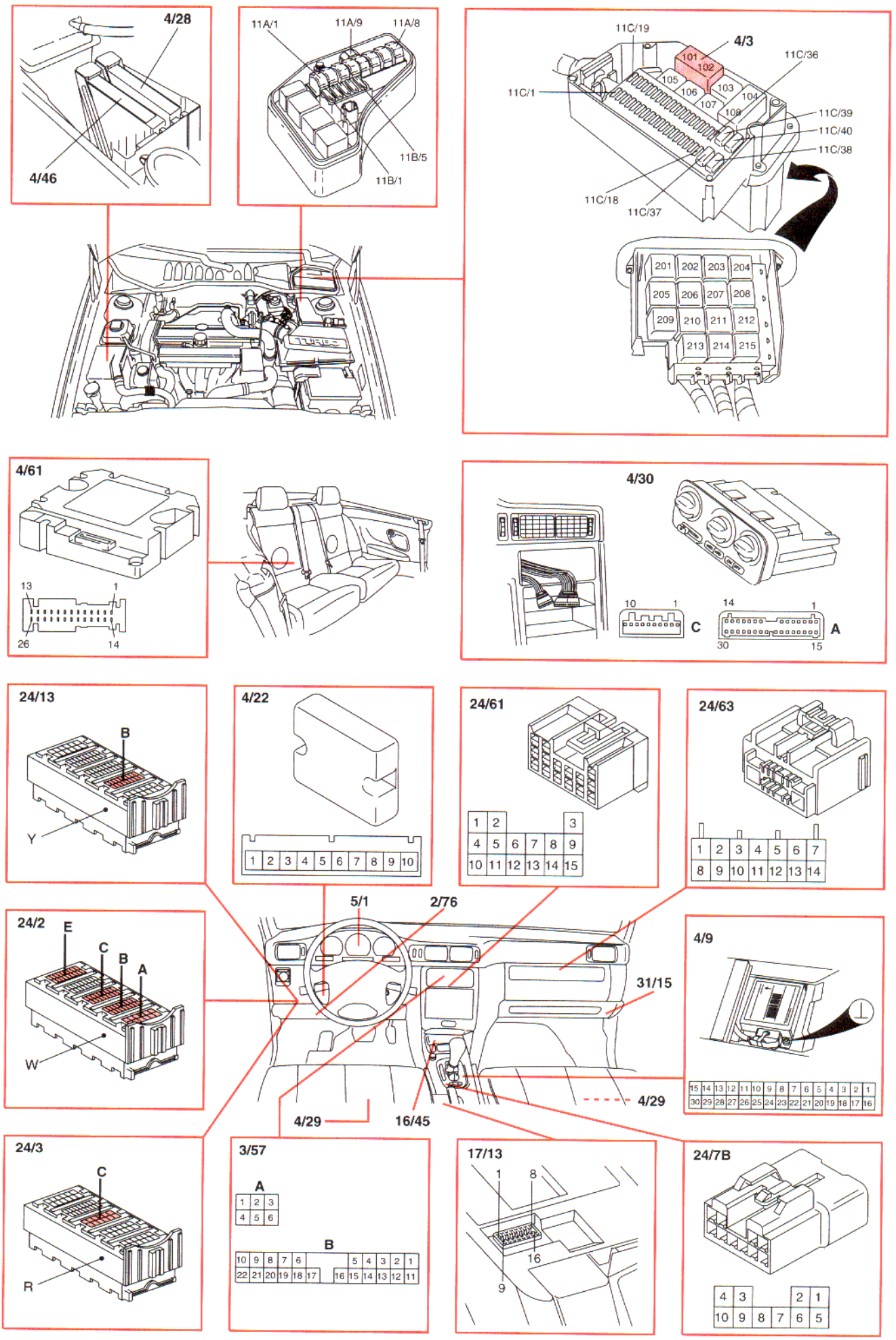
4/28
4/46
11A/1
11A/9
11A/8
11B/5
11B/1
11C/19
4/3
11C/36
11C/1
11C/39
11C/40
11C/38
11C/18
11C/37
101 102 103 104 105 106 107 108
201 202 203 204 205 206 207 208 209 210 211 212 213 214 215
4/61
13
1
26
14
4/30
10
1
C
14
1
A
30
15
24/13
B
Y
4/22
1 2 3 4 5 6 7 8 9 10
24/61
1 2 3
4 5 6 7 8 9
10 11 12 13 14 15
24/63
1 2 3 4 5 6 7
8 9 10 11 12 13 14
5/1
2/76
24/2
E
C
B
A
W
31/15
4/9
15 14 13 12 11 10 9 8 7 6 5 4 3 2 1
30 29 28 27 26 25 24 23 22 21 20 19 18 17 16
4/29
4/29
16/45
24/3
C
R
3/57
A
1 2 3
4 5 6
B
10 9 8 7 6 5 4 3 2 1
22 21 20 19 18 17 16 15 14 13 12 11
17/13
1
8
16
9
24/7B
4 3 2 1
10 9 8 7 6 5

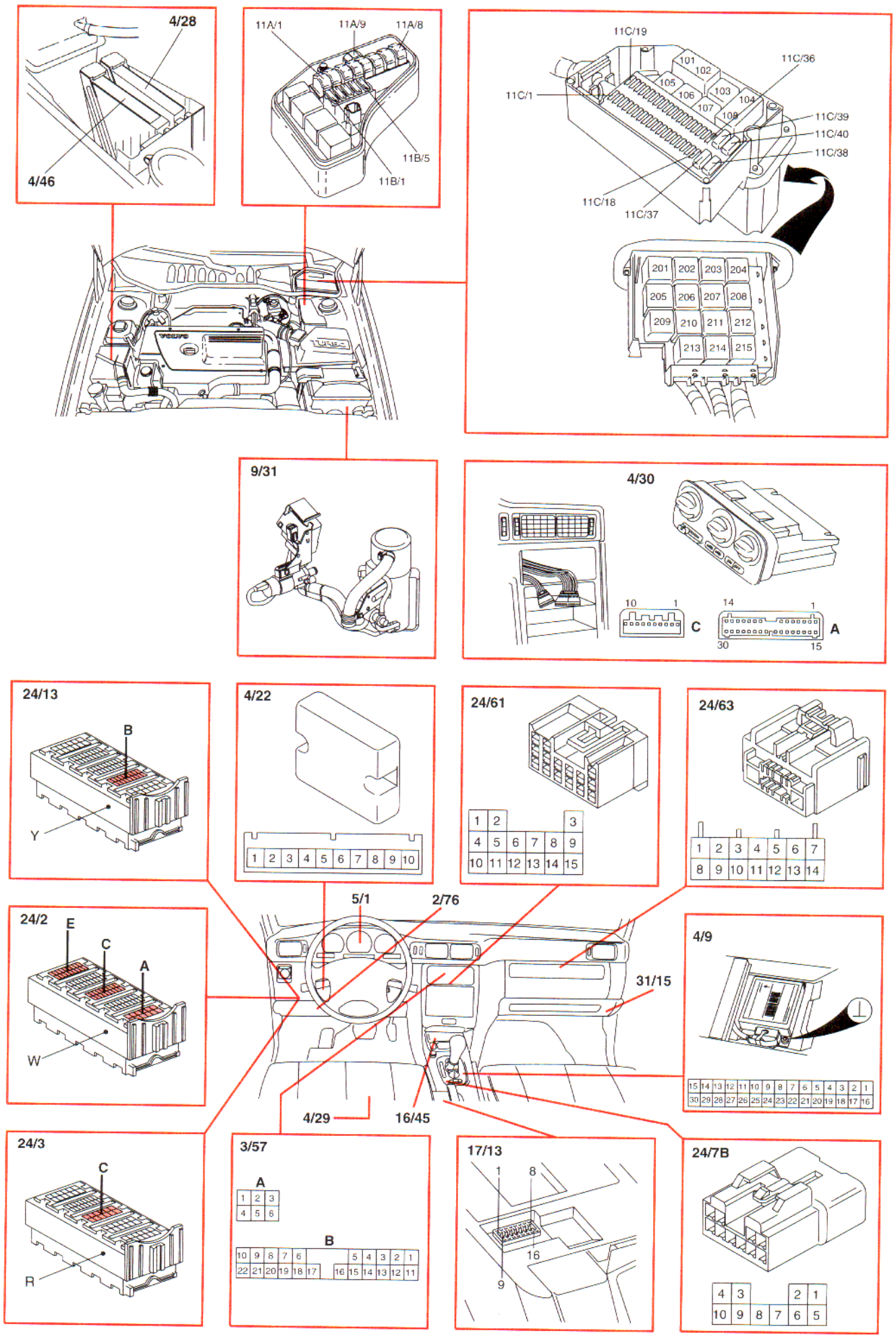
4/28
4/46
11A/1
11A/9
11A/8
11B/5
11B/1
11C/19
11C/36
11C/1
11C/39
11C/40
11C/38
11C/18
11C/37
101 102 103 104 105 106 107 108
201 202 203 204 205 206 207 208 209 210 211 212 213 214 215
9/31
4/30
10 1 C
14 1 A
30 15
24/13
B
Y
4/22
1 2 3 4 5 6 7 8 9 10
24/61
1 2 3
4 5 6 7 8 9
10 11 12 13 14 15
24/63
1 2 3 4 5 6 7
8 9 10 11 12 13 14
24/2
E
C
A
W
5/1
2/76
31/15
4/9
15 14 13 12 11 10 9 8 7 6 5 4 3 2 1
30 29 28 27 26 25 24 23 22 21 20 19 18 17 16
4/29
16/45
24/3
C
R
3/57
A
1 2 3
4 5 6
B
10 9 8 7 6 5 4 3 2 1
22 21 20 19 18 17 16 15 14 13 12 11
17/13
1
8
16
9
24/7B
4 3 2 1
10 9 8 7 6 5

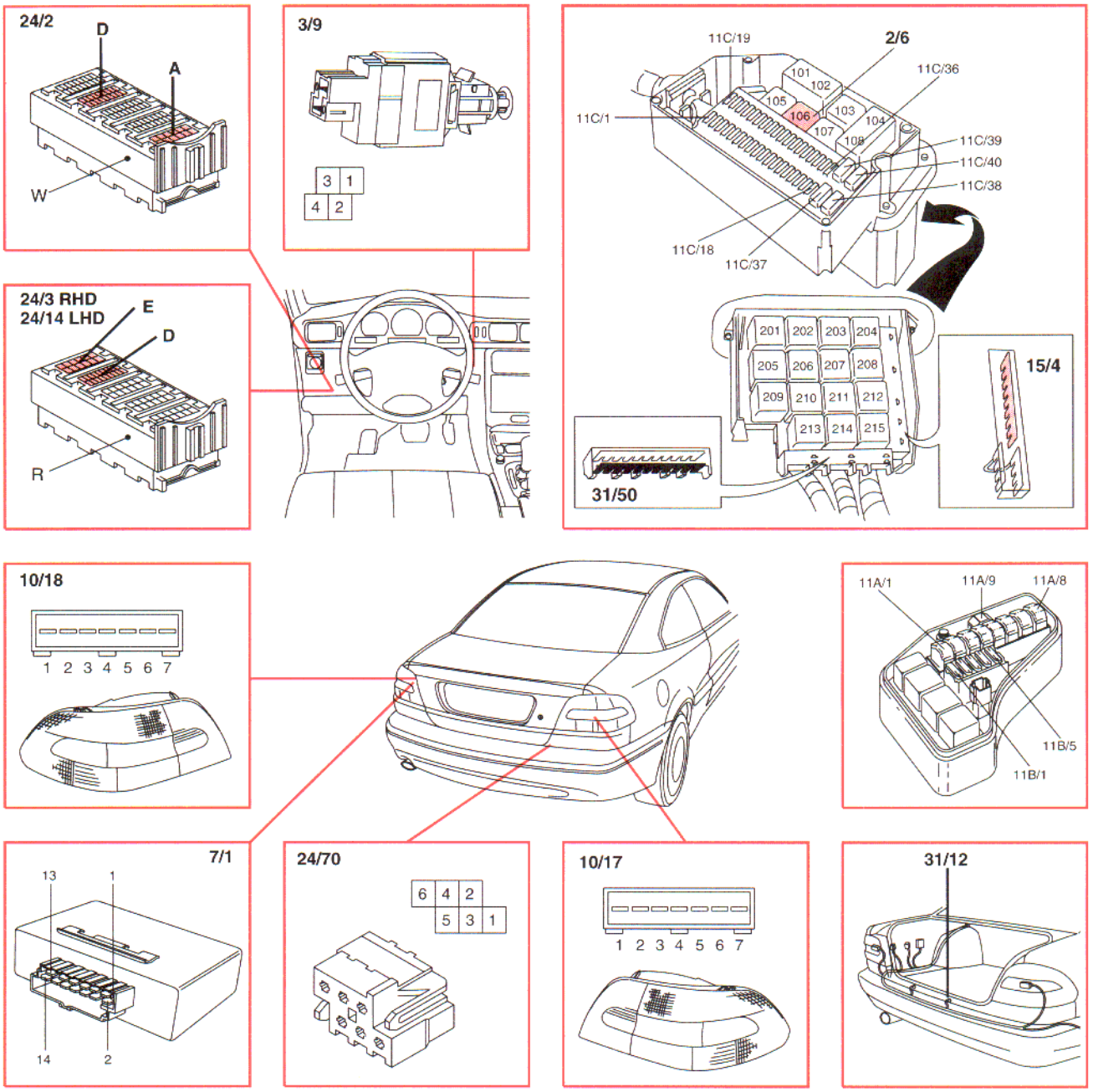
24/2
D
A
W
3/9
3 1
4 2
24/3 RHD
24/14 LHD
E
D
R
11C/19
2/6
11C/36
101
102
105
106
103
104
107
108
11C/1
11C/39
11C/40
11C/38
11C/18
11C/37
201 202 203 204
205 206 207 208
209 210 211 212
213 214 215
15/4
31/50
10/18
1 2 3 4 5 6 7
11A/1
11A/9
11A/8
11B/5
11B/1
7/1
13
1
14
2
24/70
6 4 2
5 3 1
10/17
1 2 3 4 5 6 7
31/12

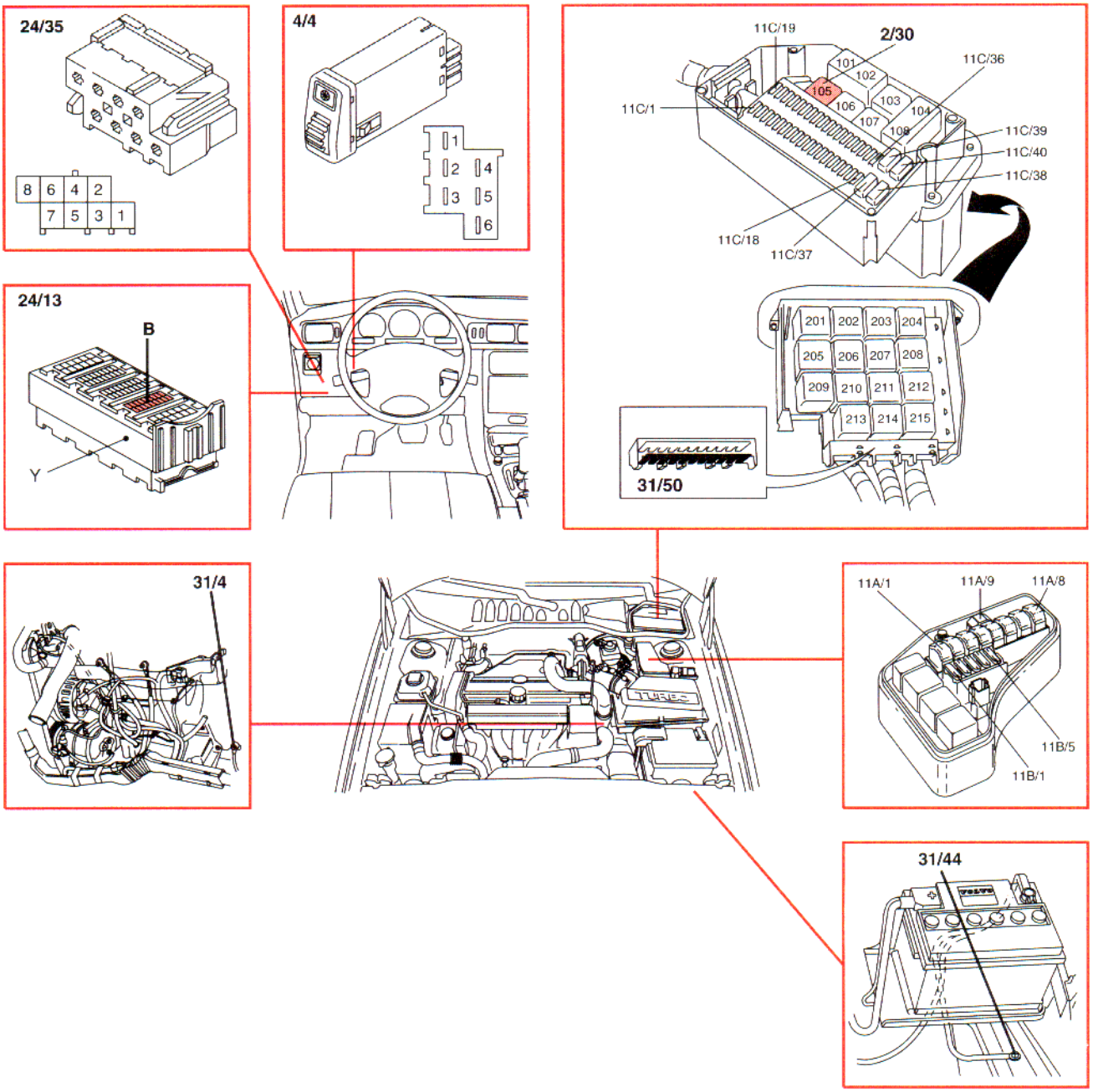
24/35
8 6 4 2
7 5 3 1
4/4
1
2 4
3 5
6
24/13
B
Y
11C/19
2/30
11C/36
101
102
105
106
103
104
107
108
11C/1
11C/39
11C/40
11C/38
11C/18
11C/37
201 202 203 204
205 206 207 208
209 210 211 212
213 214 215
31/50
31/4
11A/1
11A/9
11A/8
11B/5
11B/1
31/44

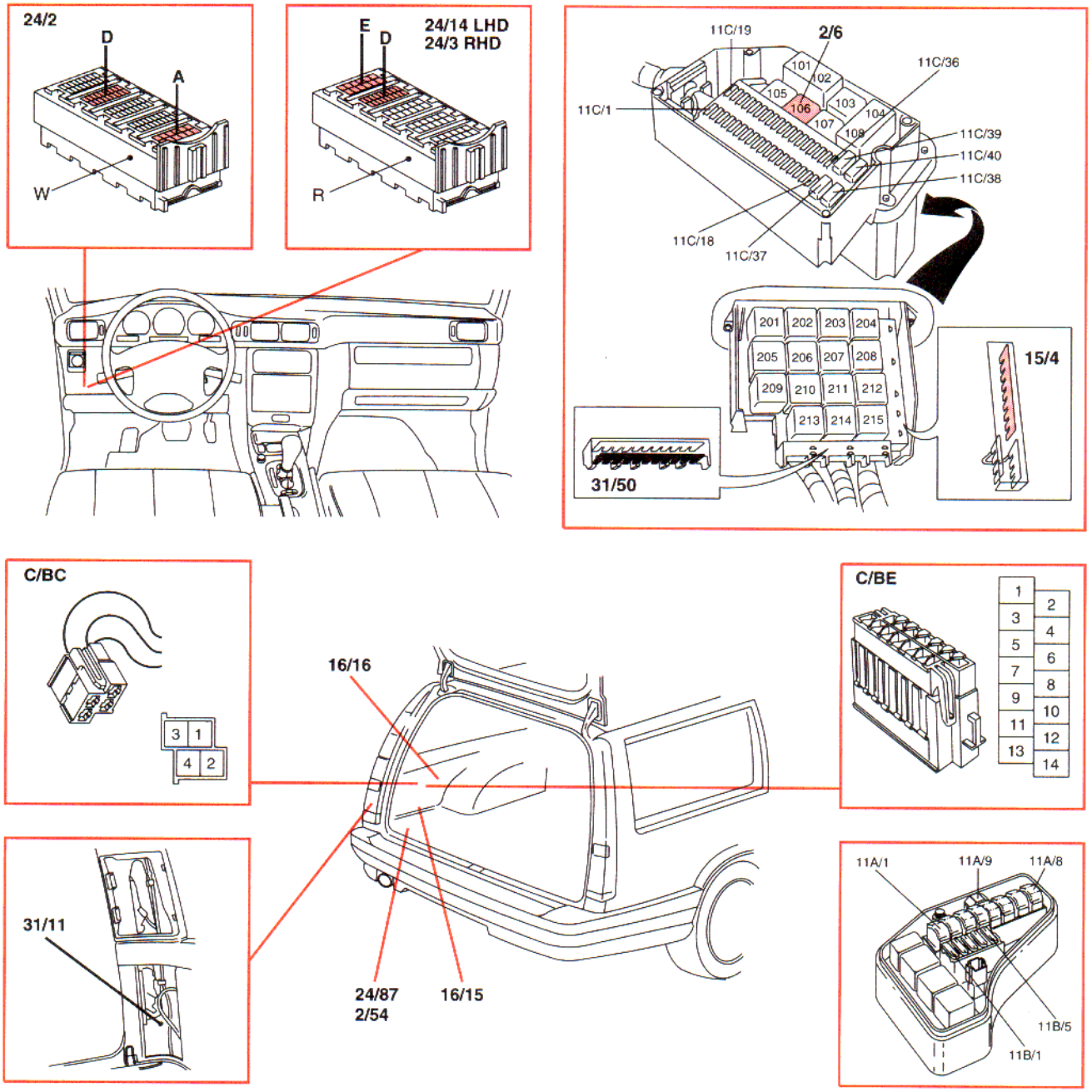
24/2
D
A
W
E
D
24/14 LHD
24/3 RHD
R
11C/19
2/6
11C/36
11C/1
101
102
105
106
103
104
107
108
11C/39
11C/40
11C/38
11C/18
11C/37
201
202
203
204
205
206
207
208
209
210
211
212
213
214
215
15/4
31/50
C/BC
3
1
4
2
16/16
C/BE
1
2
3
4
5
6
7
8
9
10
11
12
13
14
31/11
24/87
2/54
16/15
11A/1
11A/9
11A/8
11B/5
11B/1

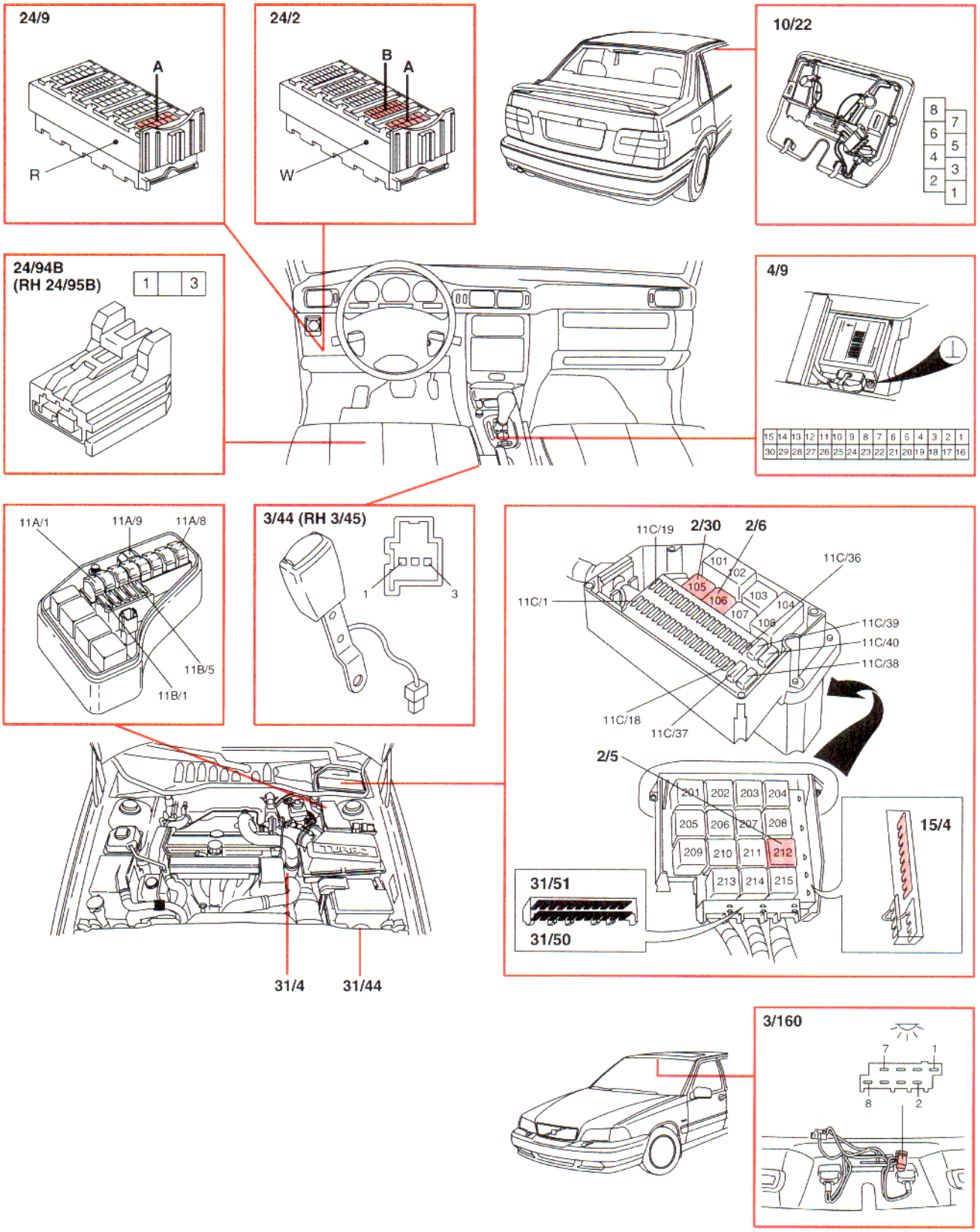
24/9
A
R
24/2
B
A
W
10/22
8
7
6
5
4
3
2
1
24/94B
(RH 24/95B)
1
3
4/9
15 14 13 12 11 10 9 8 7 6 5 4 3 2 1
30 29 28 27 26 25 24 23 22 21 20 19 18 17 16
11A/1
11A/9
11A/8
11B/5
11B/1
3/44 (RH 3/45)
1
3
11C/19
2/30
2/6
11C/36
101
102
105
106
103
104
107
108
11C/1
11C/39
11C/40
11C/38
11C/18
11C/37
2/5
201
202
203
204
205
206
207
208
209
210
211
212
213
214
215
15/4
31/51
31/50
31/4
31/44
3/160
7
1
8
2

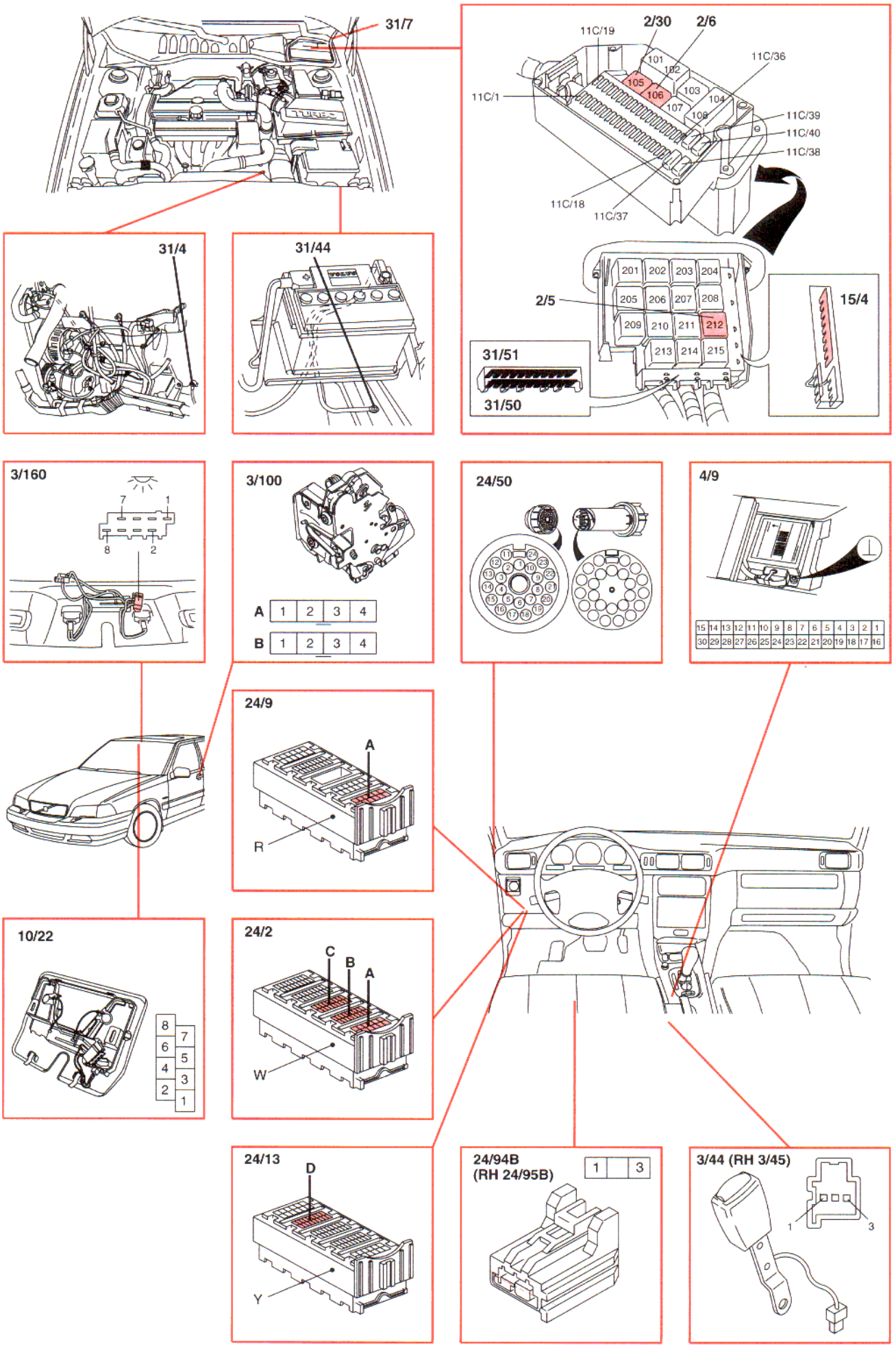
31/7
11C/19
2/30
2/6
11C/36
101
102
105
106
103
104
107
108
11C/1
11C/39
11C/40
11C/38
11C/18
11C/37
31/4
31/44
201 202 203 204
205 206 207 208
209 210 211 212
213 214 215
2/5
15/4
31/51
31/50
3/160
7 1
8 2
3/100
A 1 2 3 4
B 1 2 3 4
24/50
4/9
15 14 13 12 11 10 9 8 7 6 5 4 3 2 1
30 29 28 27 26 25 24 23 22 21 20 19 18 17 16
24/9
A
R
10/22
8 7
6 5
4 3
2 1
24/2
C
B
A
W
24/13
D
Y
24/94B
(RH 24/95B)
1 3
3/44 (RH 3/45)
1
3

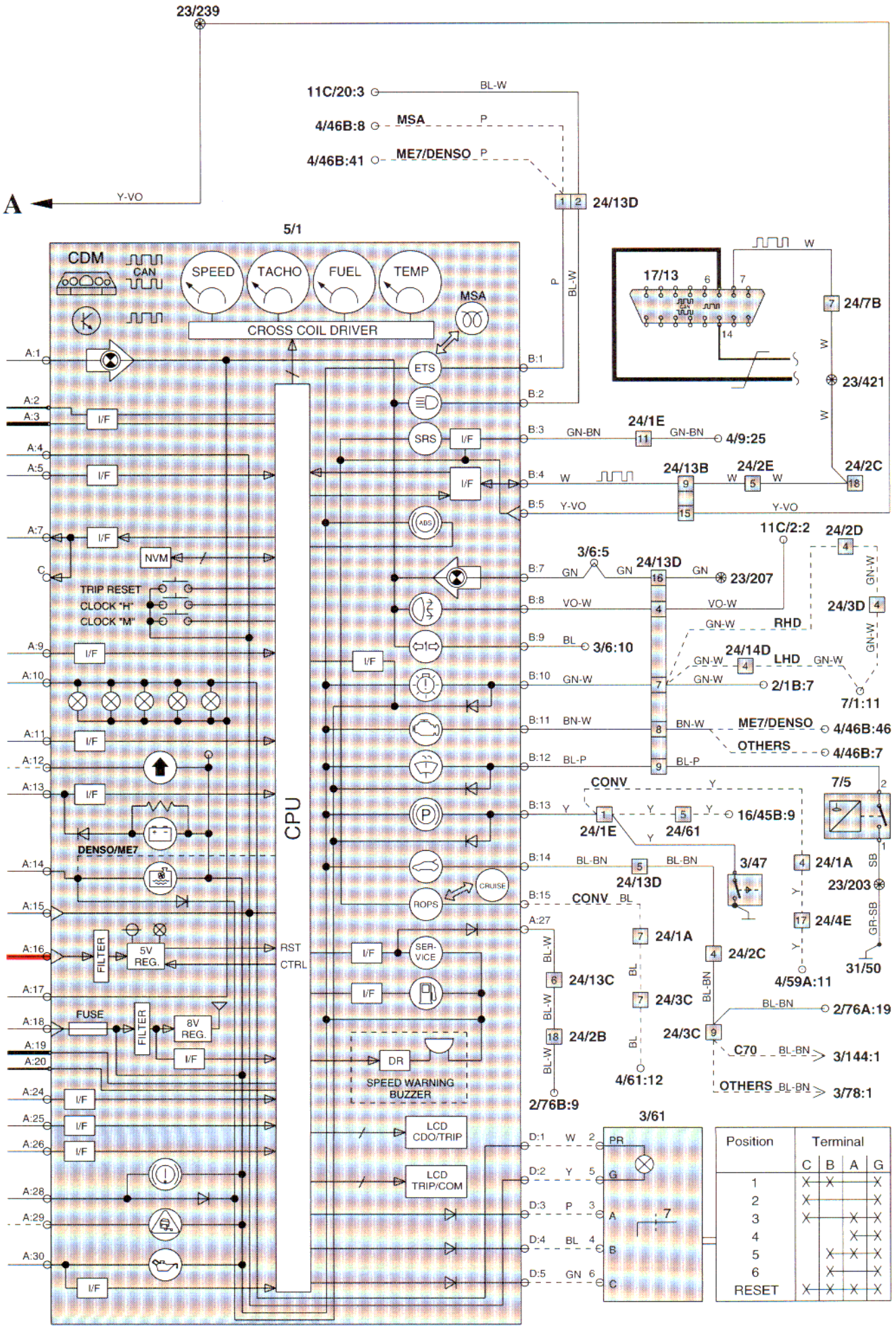
23/239
11C/20:3
BL-W
4/46B:8
MSA
P
4/46B:41
ME7/DENSO
P
A
Y-VO
24/13D
5/1
CDM
CAN
SPEED
TACHO
FUEL
TEMP
MSA
CROSS COIL DRIVER
ETS
SRS
I/F
ABS
NVM
TRIP RESET
CLOCK "H"
CLOCK "M"
DENSO/ME7
CPU
RST
CTRL
CRUISE
ROPS
SER-VICE
FILTER
5V REG.
8V REG.
FUSE
DR
SPEED WARNING BUZZER
LCD CDO/TRIP
LCD TRIP/COM
17/13
24/7B
23/421
24/1E
GN-BN
4/9:25
24/13B
24/2E
24/2C
Y-VO
11C/2:2
24/2D
3/6:5
24/13D
23/207
24/3D
RHD
3/6:10
24/14D
LHD
2/1B:7
7/1:11
ME7/DENSO
4/46B:46
OTHERS
4/46B:7
CONV
7/5
16/45B:9
24/61
3/47
24/1A
23/203
24/4E
31/50
4/59A:11
24/13C
24/1A
24/2C
24/3C
2/76A:19
24/2B
C70
3/144:1
4/61:12
OTHERS
3/78:1
2/76B:9
3/61
PR
G
A
B
C
Position
Terminal
C B A G
1
2
3
4
5
6
RESET

Combined instrument panel

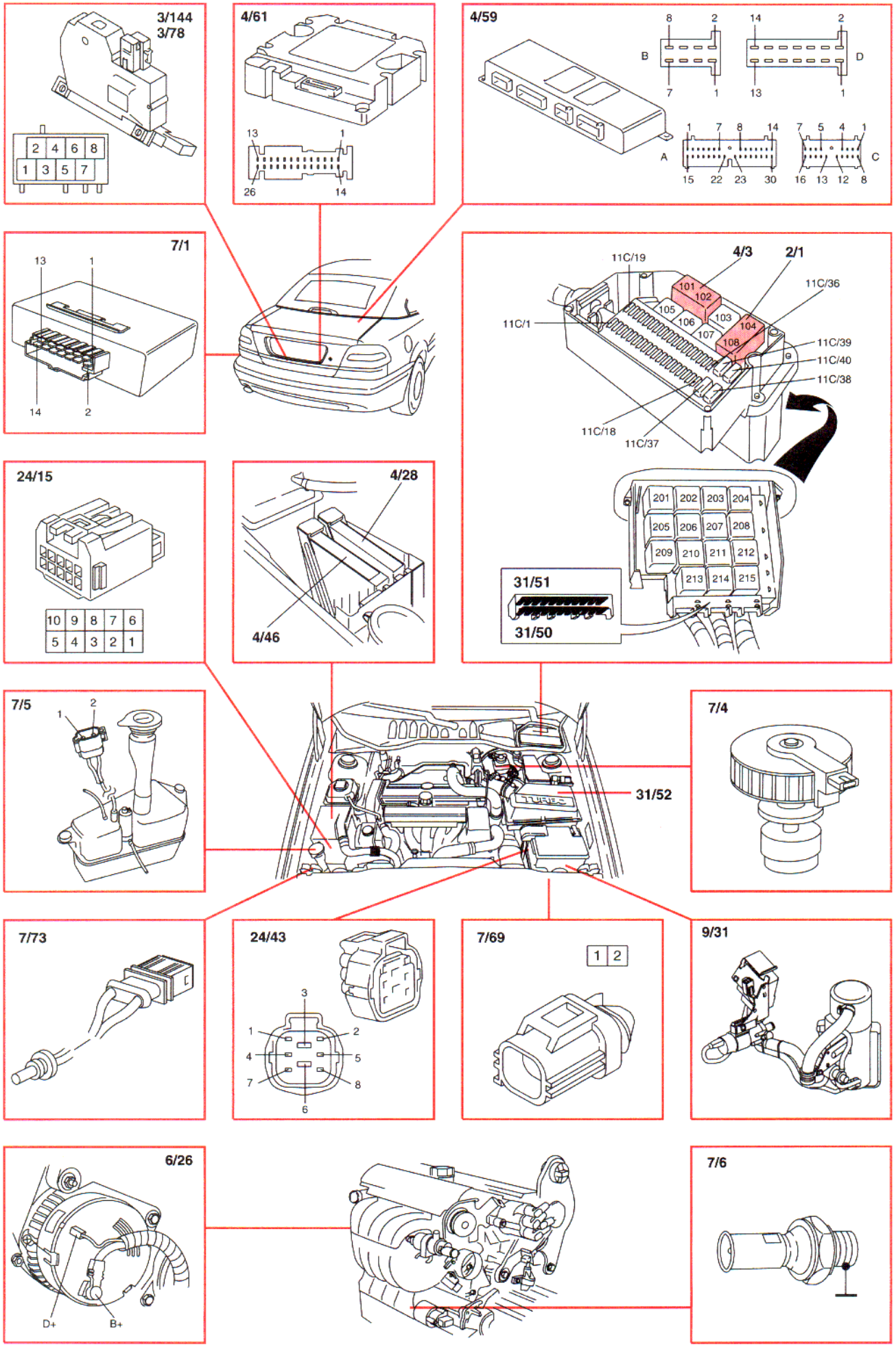

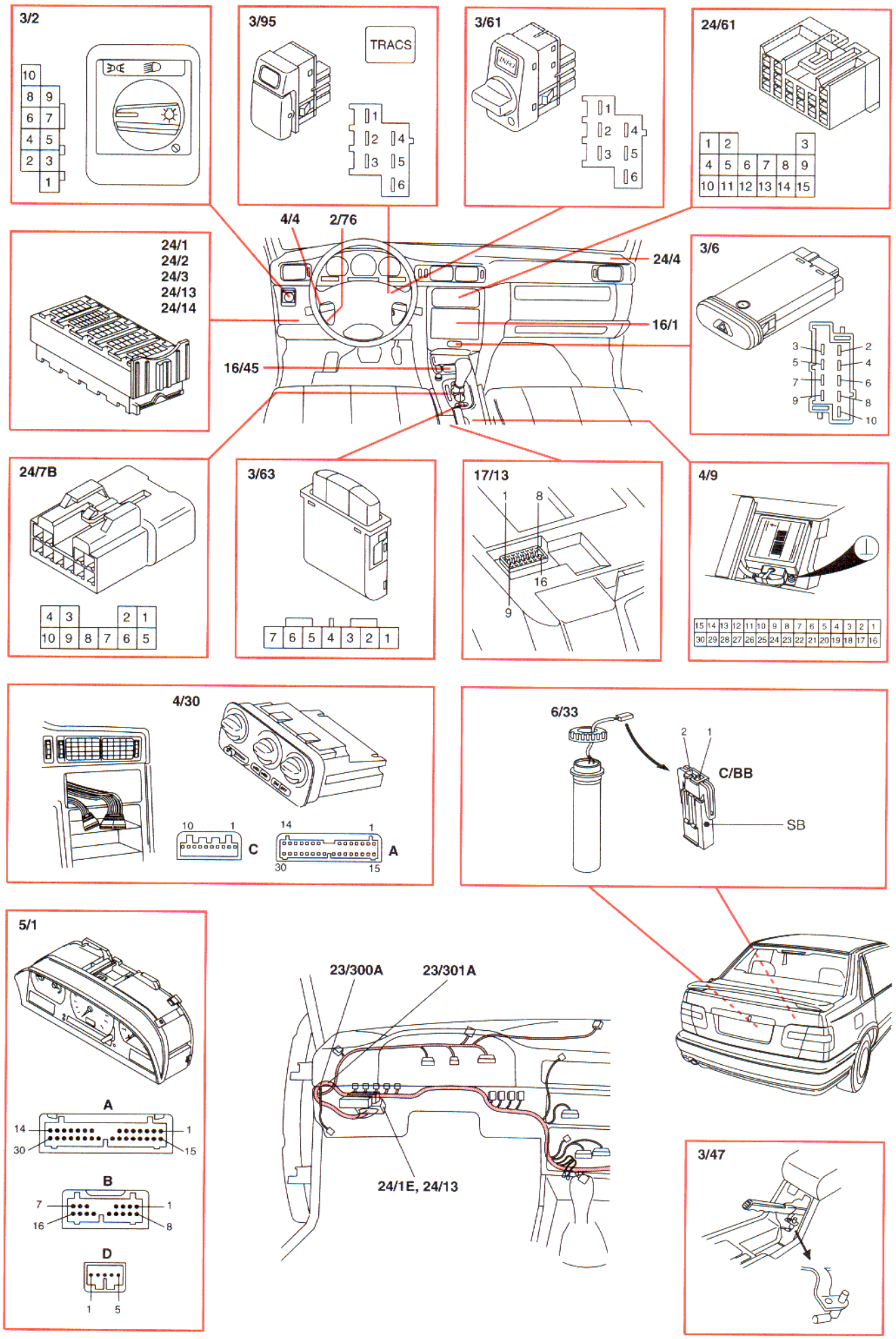
3/2
10
8 9
6 7
4 5
2 3
1
3/95
TRACS
1
2 4
3 5
6
3/61
INFO
1
2 4
3 5
6
24/61
1 2 3
4 5 6 7 8 9
10 11 12 13 14 15
4/4
2/76
24/4
16/1
16/45
24/1
24/2
24/3
24/13
24/14
3/6
3 2
5 4
7 6
9 8
10
24/7B
4 3 2 1
10 9 8 7 6 5
3/63
7 6 5 4 3 2 1
17/13
1 8
16
9
4/9
15 14 13 12 11 10 9 8 7 6 5 4 3 2 1
30 29 28 27 26 25 24 23 22 21 20 19 18 17 16
4/30
10 1
C
14 1
30 15
A
6/33
2 1
C/BB
SB
5/1
A
14 1
30 15
B
7 1
16 8
D
1 5
23/300A
23/301A
24/1E, 24/13
3/47

Combined instrument panel

Connectors in combined instrument panel

A 30-pin connector

1	Turn signal, right (+)
2	CAN-communication
3	CAN-communication
4	Fuel level sensor (-)
5	Fuel level sensor (+)
6	Digital speedometer output, 48 pulses/revolution
7	Digital speedometer output, 12 pulses/revolution
8	-
9	Fuel consumption
10	Rheostat, instrument lighting (+)
11	Tachometer, input signal
12	Winter program and low gear selection (automatic transmission)
13	Generator signal, D+
14	Engine coolant level switch
15	Signal ground (31/51)
16	30-supply
17	Power ground (31/50)
18	15-supply
19	CAN-communication
20	CAN-communication
21-23	-
24	Outside temperature sensor (+)
25	Outside temperature sensor (-)
26	Engine coolant temperature (ECT) sensor
27	-
28	Brake fluid level sensor (-)
29	TRACS
30	Oil pressure sensor (-)

B 16-pin connector

1	ETS / Diesel preheating
2	Brake (stop) lamps (+)
3	SRS sensor unit
4	Data Link Connector (DLC)
5	X-supply
6	ABS Anti-lock braking system
7	Turn signal, left (+)
8	Tail lamp (+)
9	Turn signal, trailer (+)
10	Bulb failure warning sensor (-)
11	Check engine (-)
12	Brake fluid level sensor (-)
13	Parking brake switch (-)
14	Trunk lid open
15	Control module rollover bar (-) / Cruise control
16	-

C 1-pin connector

Digital speedometer output, 12 pulses/revolution (for accessories)

D 5-pin connector

1	Rheostat, instrument lighting (+)
2	Signal ground (31/51)
3	Function signal
4	Function signal
5	Function signal

Instrument lamps

1	Left turn signal lamp
2	Turn signal, right
3	ROPS indicator lamp (CONV) Cruise control indicator lamp (Not CONV)
4	Windshield washer reservoir level indicator lamp
5	Warning lamp, fuel level
6	Fog tail lamp indicator lamp
7	High beam warning lamp
8	Trunk lid indicator lamp
9	Bulb failure warning lamp
10	Warning lamp, trailer
11	Diesel preheating indicator lamp (MSA) ETS indicator lamp (Not MSA)
12	Warning lamp, SRS
13	Warning lamp, charging
14	Warning lamp, oil pressure
15	Brake warning lamp
16	Warning lamp, parking brake
17	Warning lamp, ABS
18	Winter program indicator lamp/ shift indicator
19	Warning lamp, coolant level
20	Warning lamp, TRACS
21	Warning lamp, Check engine
22	Service reminder indicator (SRI)

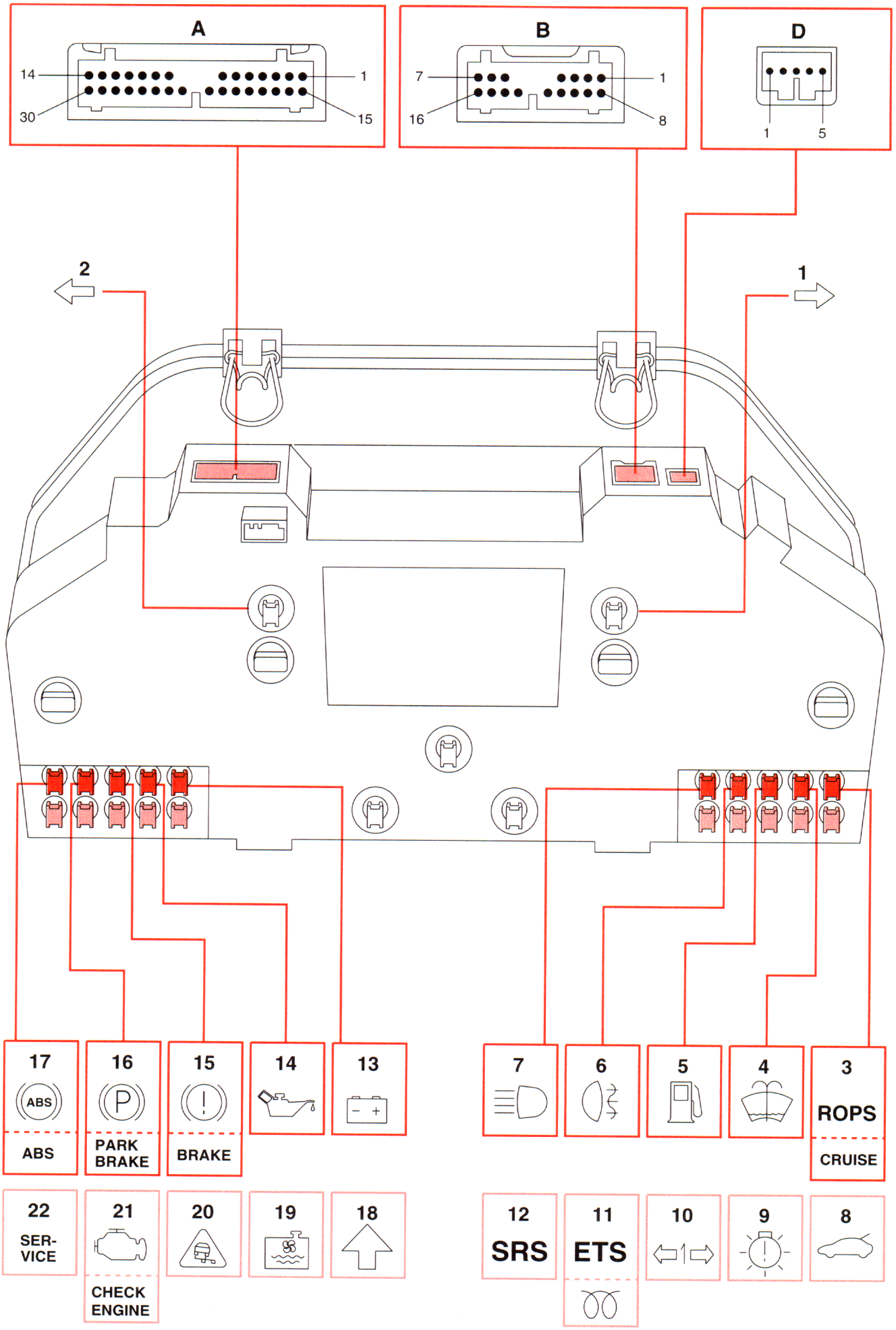
A
14
1
30
15
B
7
1
16
8
D
1
5
2
1
17
ABS
ABS
16
P
PARK BRAKE
15
BRAKE
14
13
7
6
5
4
3
ROPS
CRUISE
22
SER-VICE
21
CHECK ENGINE
20
19
18
12
SRS
11
ETS
10
9
8

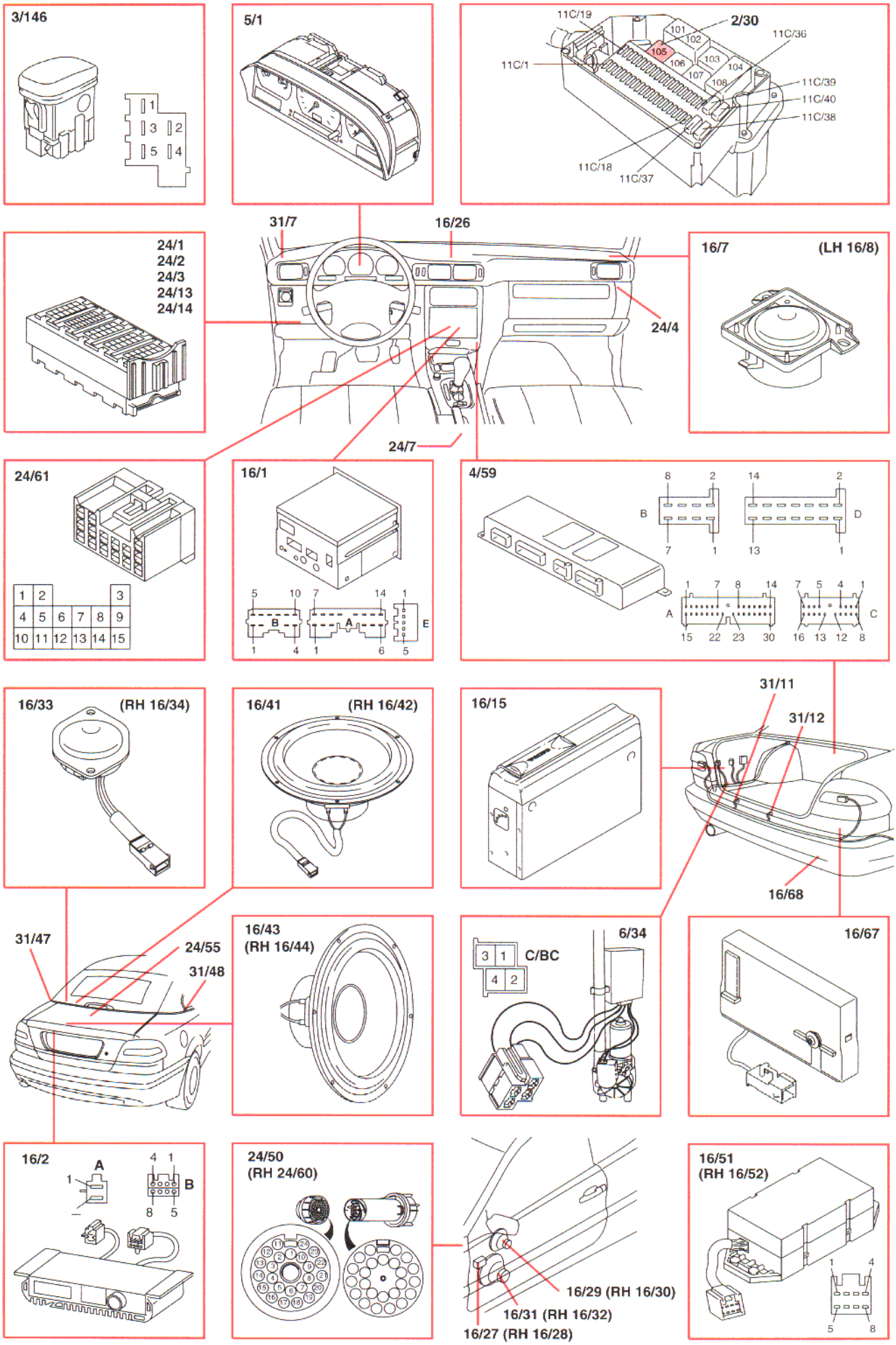
3/146
1
3 2
5 4
5/1
11C/19
2/30
11C/36
101
102
105
106
103
104
107
108
11C/1
11C/39
11C/40
11C/38
11C/18
11C/37
31/7
16/26
24/1
24/2
24/3
24/13
24/14
24/4
16/7
(LH 16/8)
24/7
24/61
1 2 3
4 5 6 7 8 9
10 11 12 13 14 15
16/1
5 10 7 14 1
B A E
1 4 1 6 5
4/59
8 2 14 2
B D
7 1 13 1
1 7 8 14 7 5 4 1
A C
15 22 23 30 16 13 12 8
16/33
(RH 16/34)
16/41
(RH 16/42)
16/15
31/11
31/12
16/68
31/47
24/55
31/48
16/43
(RH 16/44)
3 1
4 2
C/BC
6/34
16/67
16/2
A
1
4 1
B
8 5
24/50
(RH 24/60)
16/29 (RH 16/30)
16/31 (RH 16/32)
16/27 (RH 16/28)
16/51
(RH 16/52)
1 4
5 8

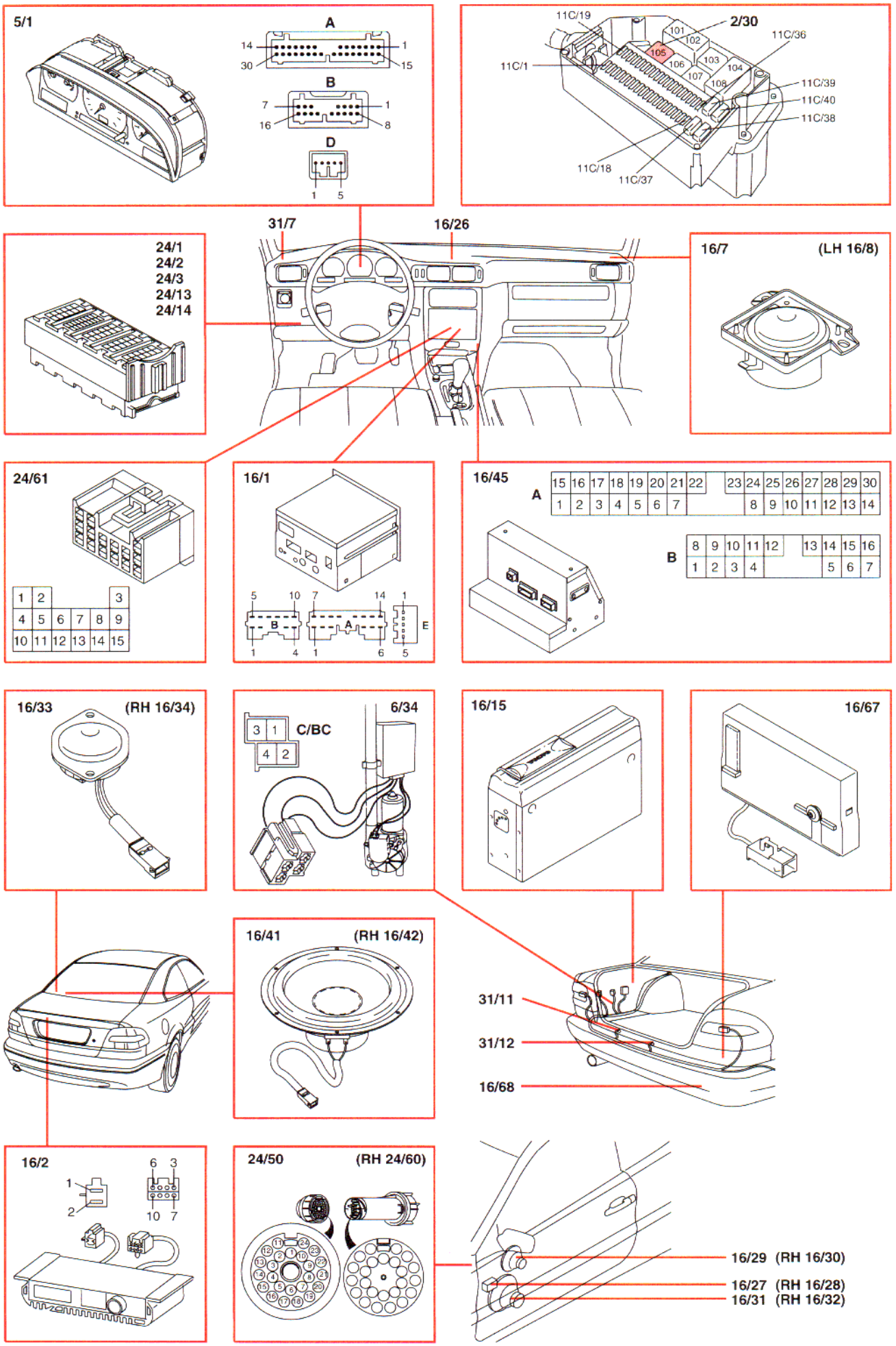
5/1
A
14
1
30
15
B
7
1
16
8
D
1
5
11C/19
2/30
101
102
105
106
103
104
107
108
11C/36
11C/1
11C/39
11C/40
11C/38
11C/18
11C/37
31/7
16/26
24/1
24/2
24/3
24/13
24/14
16/7
(LH 16/8)
24/61
1 2 3
4 5 6 7 8 9
10 11 12 13 14 15
16/1
5 10 7 14 1
B A E
1 4 1 6 5
16/45
A
15 16 17 18 19 20 21 22 23 24 25 26 27 28 29 30
1 2 3 4 5 6 7 8 9 10 11 12 13 14
B
8 9 10 11 12 13 14 15 16
1 2 3 4 5 6 7
16/33
(RH 16/34)
6/34
3 1
4 2
C/BC
16/15
16/67
16/41
(RH 16/42)
31/11
31/12
16/68
16/2
1
2
6 3
10 7
24/50
(RH 24/60)
16/29 (RH 16/30)
16/27 (RH 16/28)
16/31 (RH 16/32)

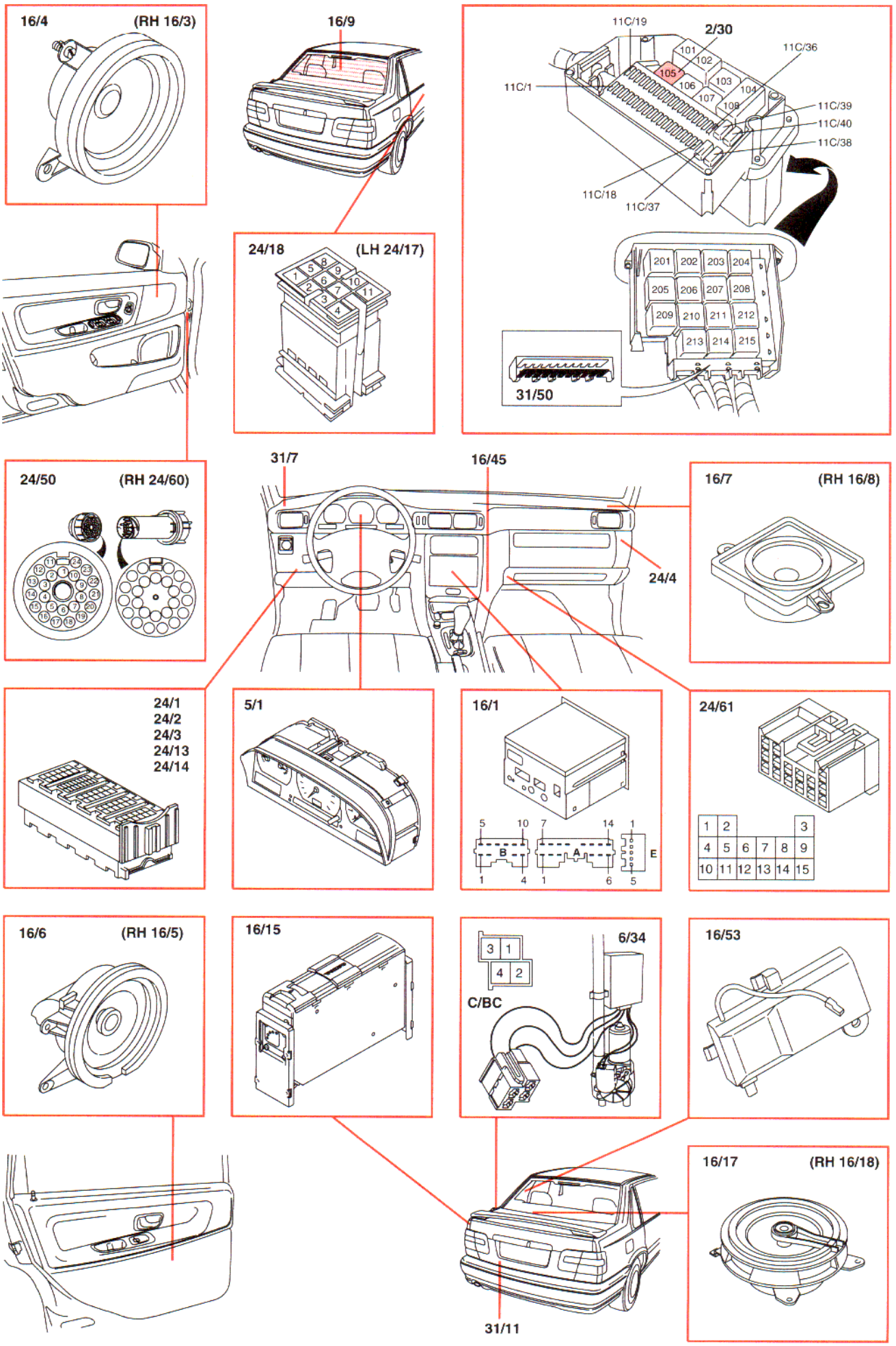
16/4
(RH 16/3)
16/9
24/18
(LH 24/17)
11C/19
2/30
11C/36
11C/1
11C/39
11C/40
11C/38
11C/18
11C/37
31/50
24/50
(RH 24/60)
31/7
16/45
24/4
16/7
(RH 16/8)
24/1
24/2
24/3
24/13
24/14
5/1
16/1
24/61
16/6
(RH 16/5)
16/15
6/34
C/BC
16/53
16/17
(RH 16/18)
31/11

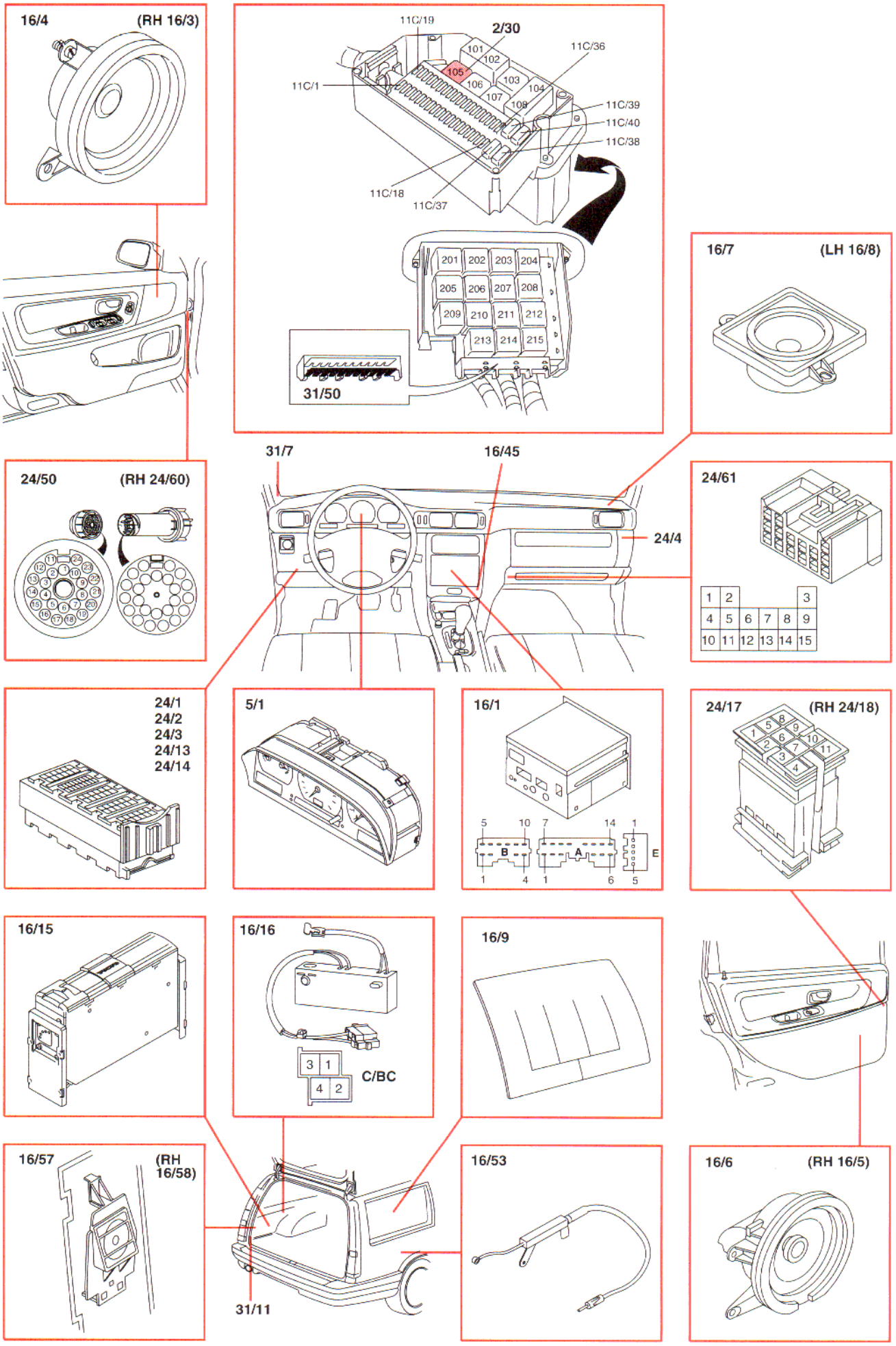
16/4
(RH 16/3)
11C/19
2/30
11C/36
101
102
105
106
103
104
107
108
11C/1
11C/39
11C/40
11C/38
11C/18
11C/37
201
202
203
204
205
206
207
208
209
210
211
212
213
214
215
31/50
16/7
(LH 16/8)
31/7
16/45
24/4
24/50
(RH 24/60)
24/61
1 2 3
4 5 6 7 8 9
10 11 12 13 14 15
24/1
24/2
24/3
24/13
24/14
5/1
16/1
5 10 7 14 1
B A E
1 4 1 6 5
24/17
(RH 24/18)
16/15
16/16
3 1
4 2
C/BC
16/9
16/57
(RH
16/58)
31/11
16/53
16/6
(RH 16/5)

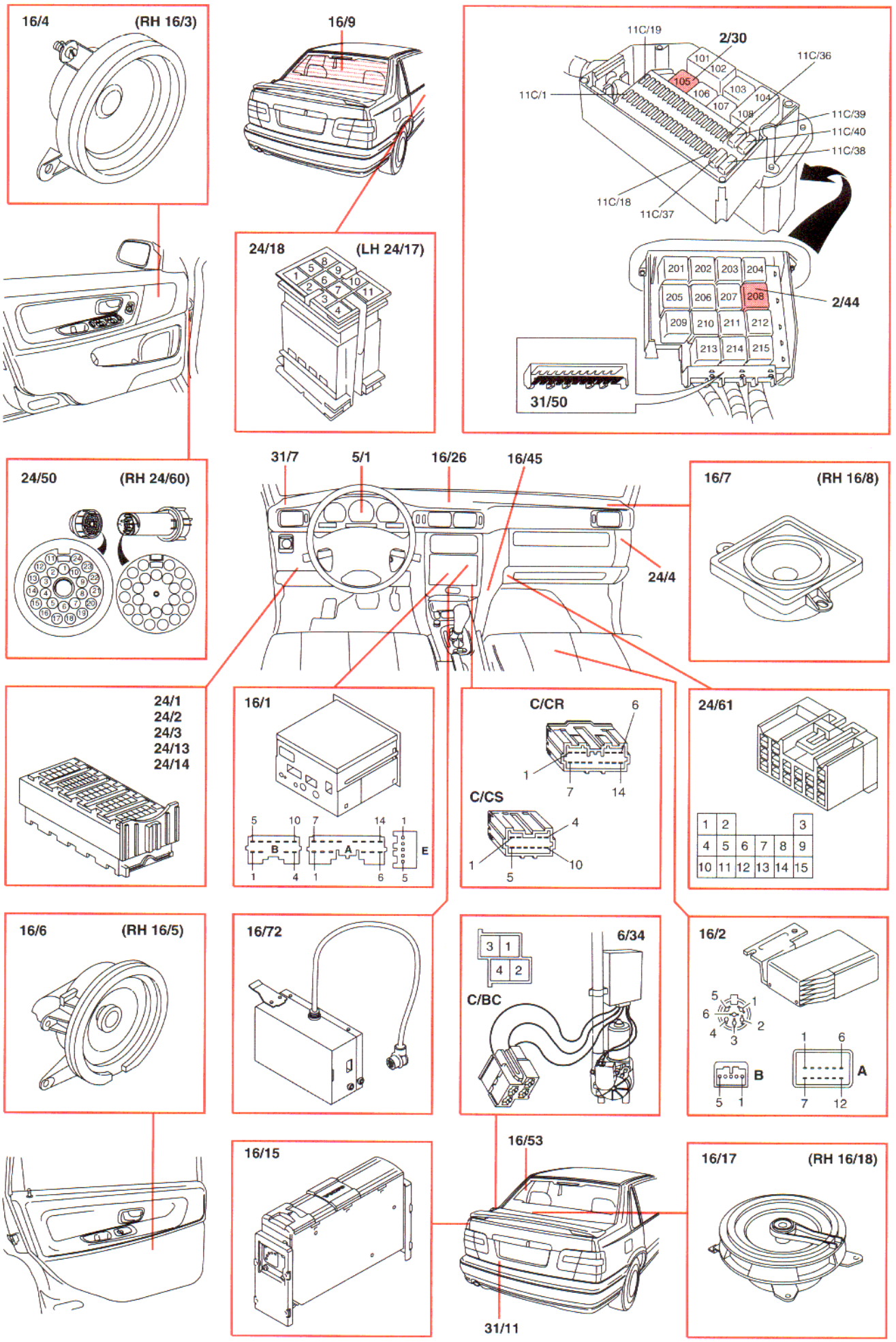
16/4
(RH 16/3)
16/9
24/18
(LH 24/17)
11C/19
2/30
11C/36
11C/1
11C/39
11C/40
11C/38
11C/18
11C/37
2/44
31/50
24/50
(RH 24/60)
31/7
5/1
16/26
16/45
24/4
16/7
(RH 16/8)
24/1
24/2
24/3
24/13
24/14
16/1
C/CR
C/CS
24/61
16/6
(RH 16/5)
16/72
6/34
C/BC
16/2
16/15
16/53
31/11
16/17
(RH 16/18)

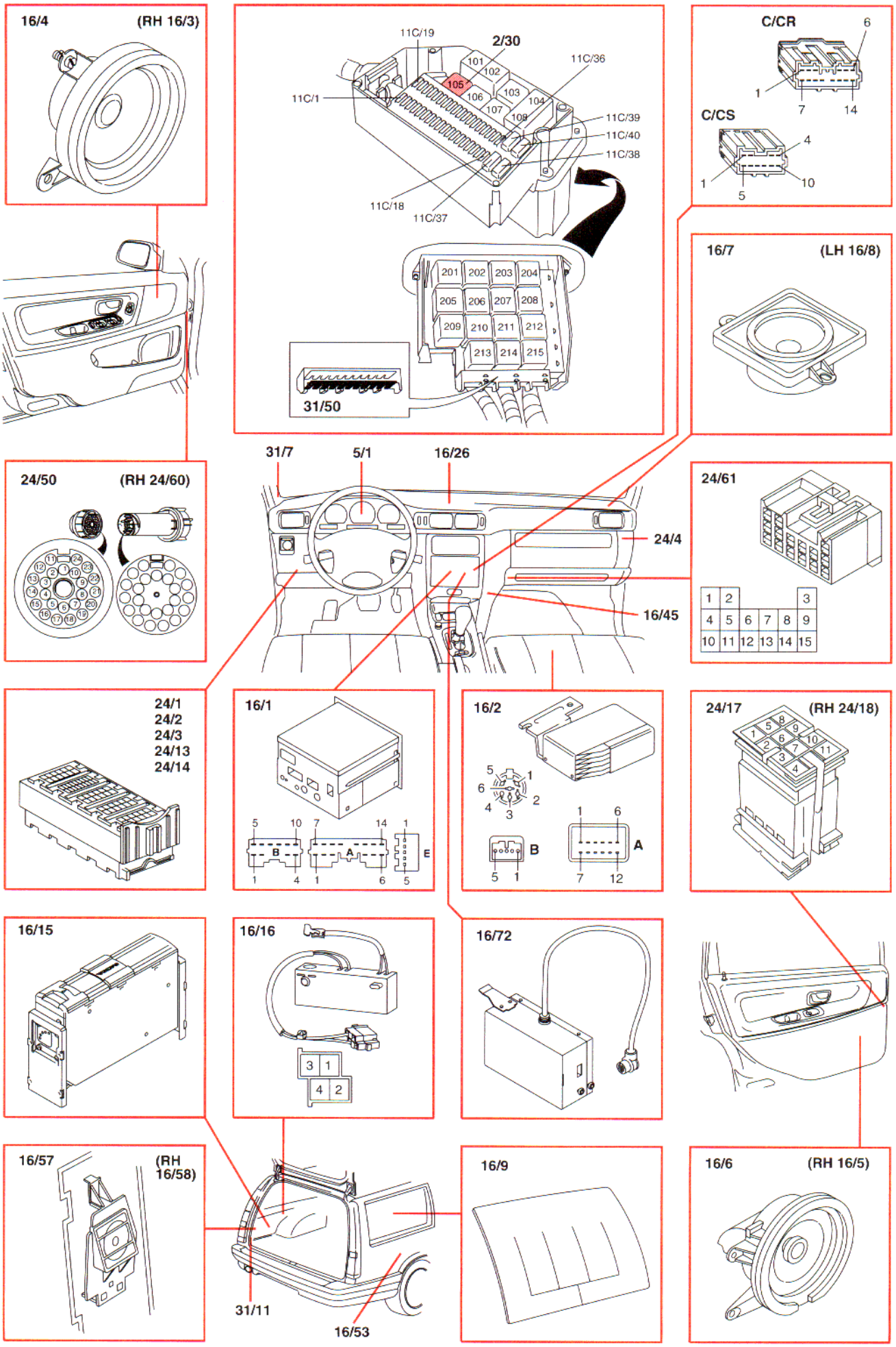
16/4
(RH 16/3)
11C/19
2/30
11C/36
11C/1
101
102
105
106
103
104
107
108
11C/39
11C/40
11C/38
11C/18
11C/37
201
202
203
204
205
206
207
208
209
210
211
212
213
214
215
31/50
C/CR
6
1
7
14
C/CS
4
1
5
10
16/7
(LH 16/8)
31/7
5/1
16/26
24/50
(RH 24/60)
24/4
16/45
24/61
1
2
3
4
5
6
7
8
9
10
11
12
13
14
15
24/1
24/2
24/3
24/13
24/14
16/1
5
10
7
14
1
B
A
E
1
4
1
6
5
16/2
5
1
6
2
4
3
B
A
5
1
1
6
7
12
24/17
(RH 24/18)
16/15
16/16
3
1
4
2
16/72
16/57
(RH
16/58)
31/11
16/53
16/9
16/6
(RH 16/5)

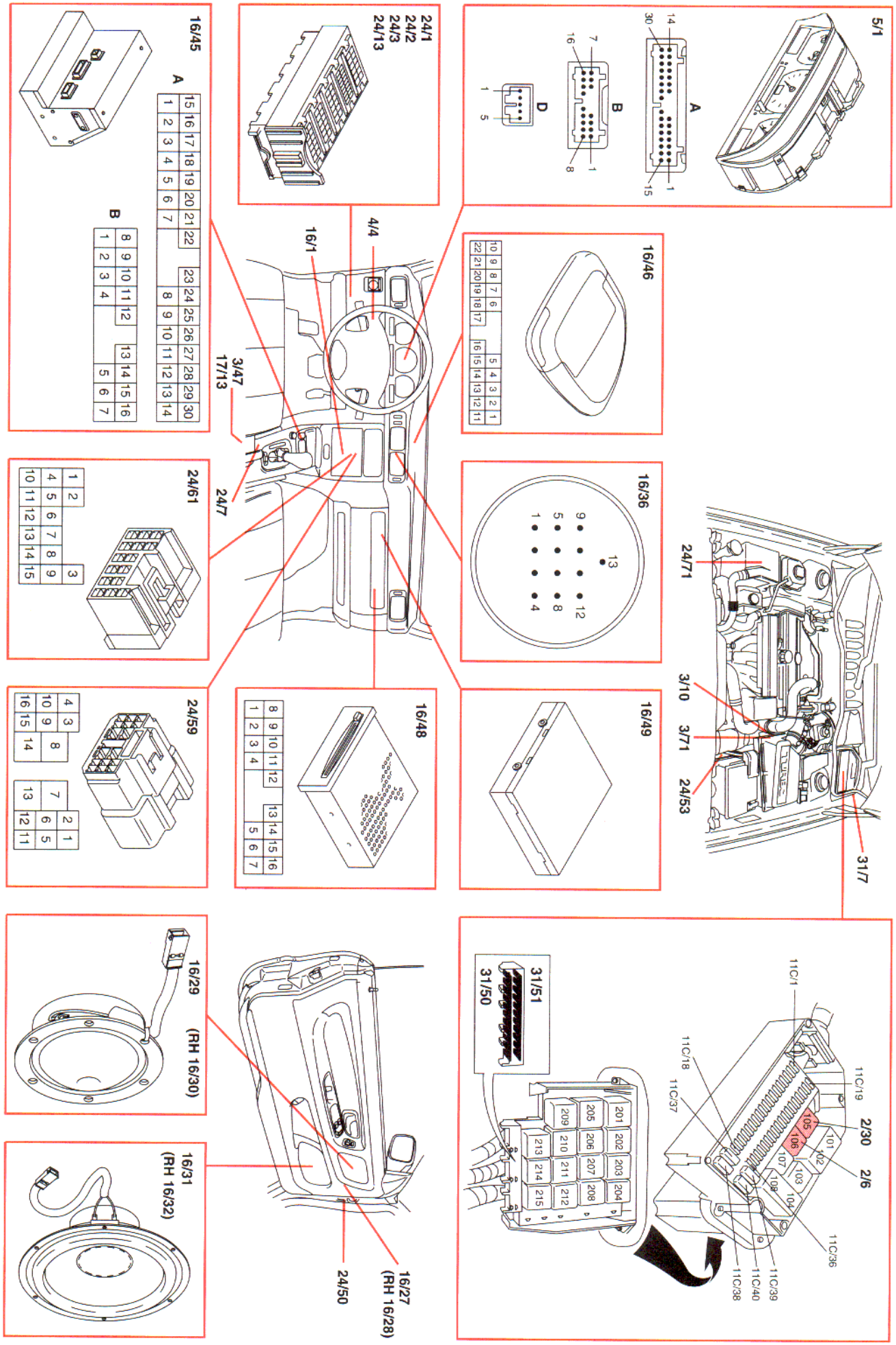
5/1
A
B
D
16/46
16/36
16/49
16/48
24/1
24/2
24/3
24/13
4/4
16/1
3/47
17/13
24/7
16/45
24/61
24/59
24/71
3/10
3/71
24/53
31/7
11C/1
11C/19
2/30
2/6
11C/18
11C/37
11C/36
11C/39
11C/40
11C/38
31/51
31/50
16/29
(RH 16/30)
16/31
(RH 16/32)
16/27
(RH 16/28)
24/50

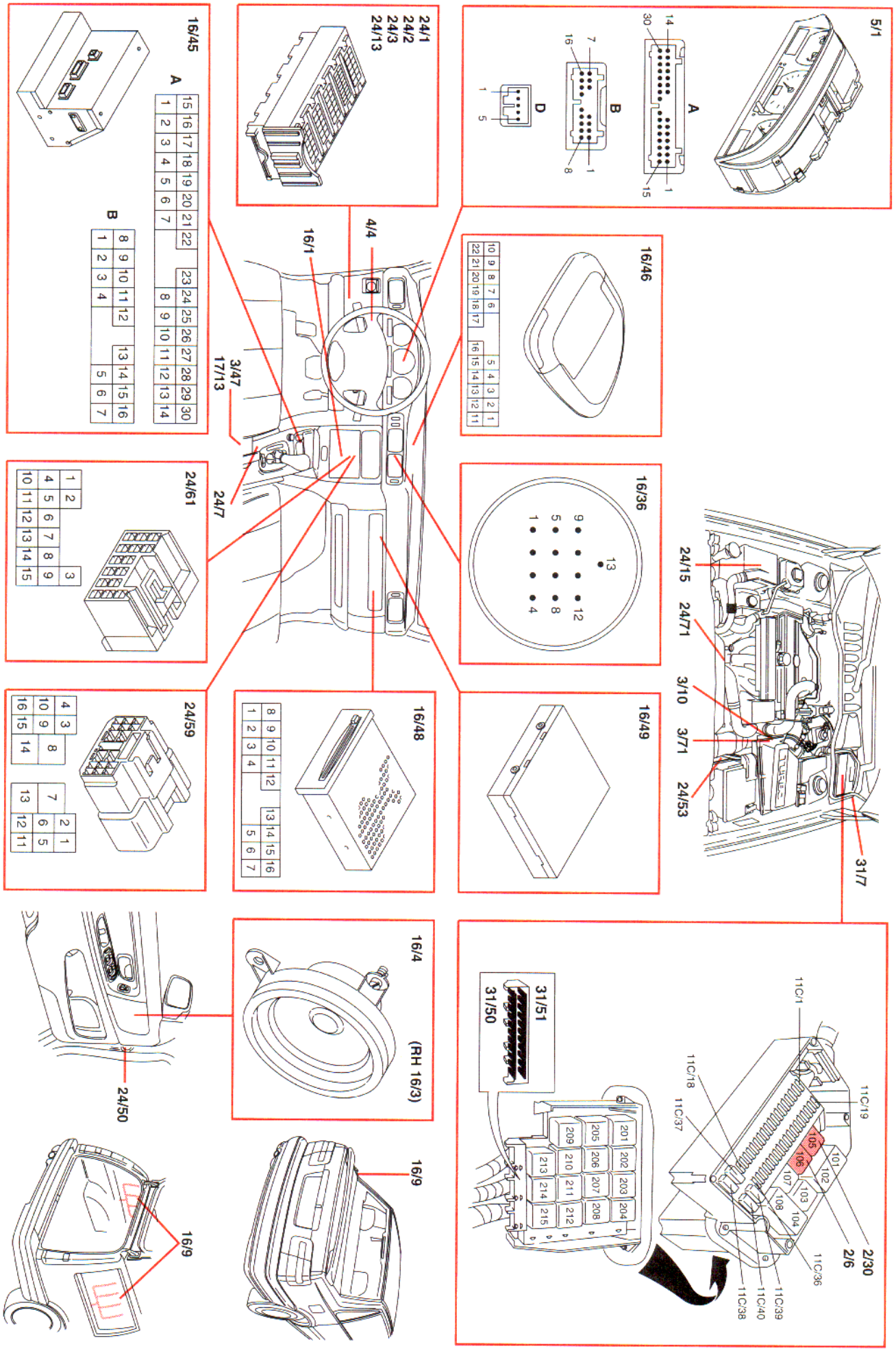
5/1
A
B
D
24/1
24/2
24/3
24/13
16/46
16/36
16/49
16/48
16/4
(RH 16/3)
16/9
16/45
24/61
24/59
24/50
4/4
16/1
3/47
17/13
24/7
24/15
24/71
3/10
3/71
24/53
31/7
31/51
31/50
11C/1
11C/19
11C/18
11C/37
11C/36
11C/39
11C/40
11C/38
2/30
2/6

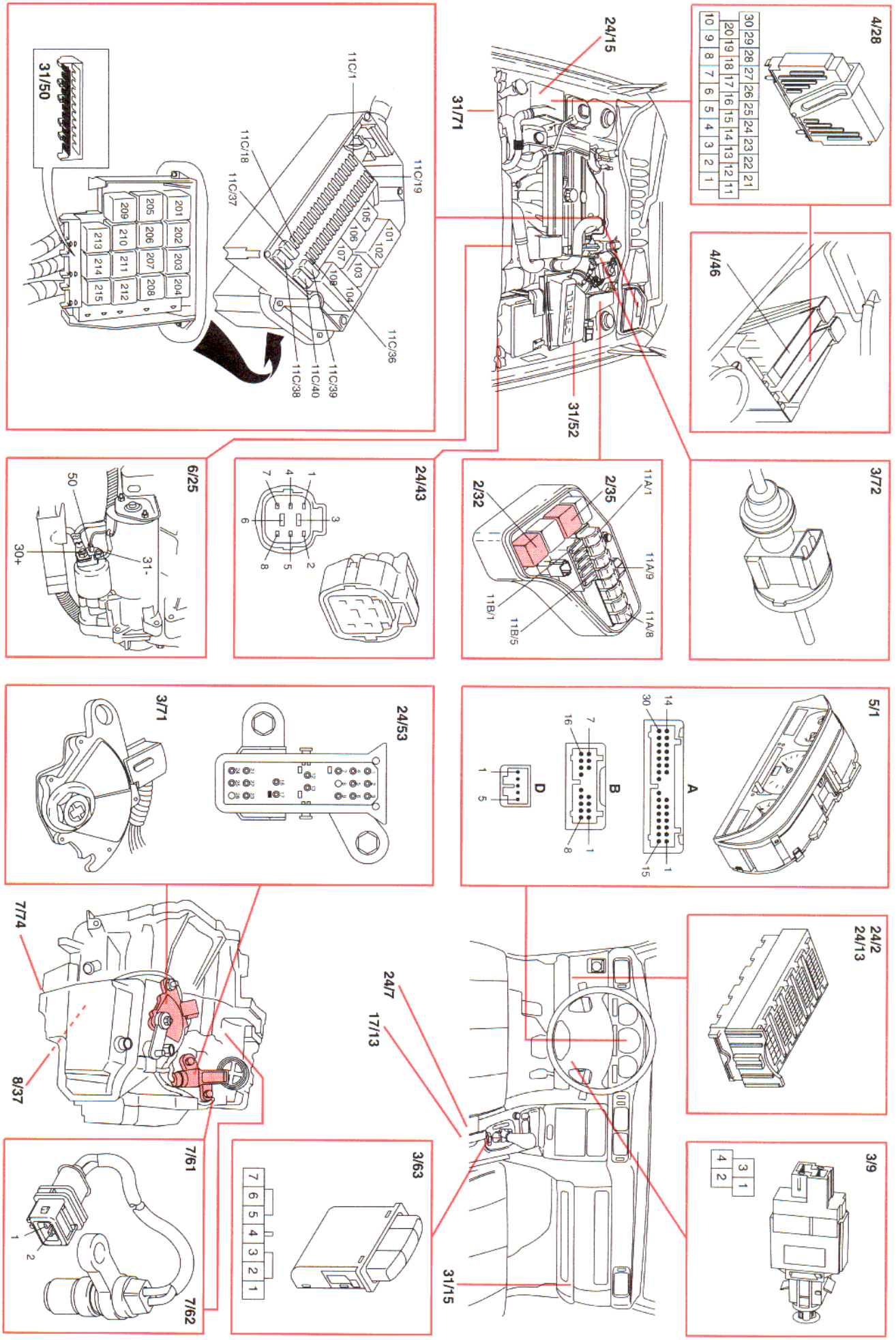
4/28
30 29 28 27 26 25 24 23 22 21
20 19 18 17 16 15 14 13 12 11
10 9 8 7 6 5 4 3 2 1
4/46
24/15
31/71
31/52
11C/1
11C/19
11C/18
11C/37
11C/36
11C/39
11C/40
11C/38
101 102 103 104 105 106 107 108
201 202 203 204 205 206 207 208 209 210 211 212 213 214 215
31/50
3/72
2/35
2/32
11A/1
11A/9
11A/8
11B/1
11B/5
24/43
1 2 3 4 5 6 7 8
6/25
50
30+
31-
5/1
A
B
D
14 30 1 15
7 16 1 8
1 5
24/2
24/13
3/9
1 3 2 4
31/15
24/7
17/13
3/63
1 2 3 4 5 6 7
24/53
3/71
7/74
8/37
7/61
7/62
1 2

Electronically controlled automatic transmission AW 50-42
Denso, ME7

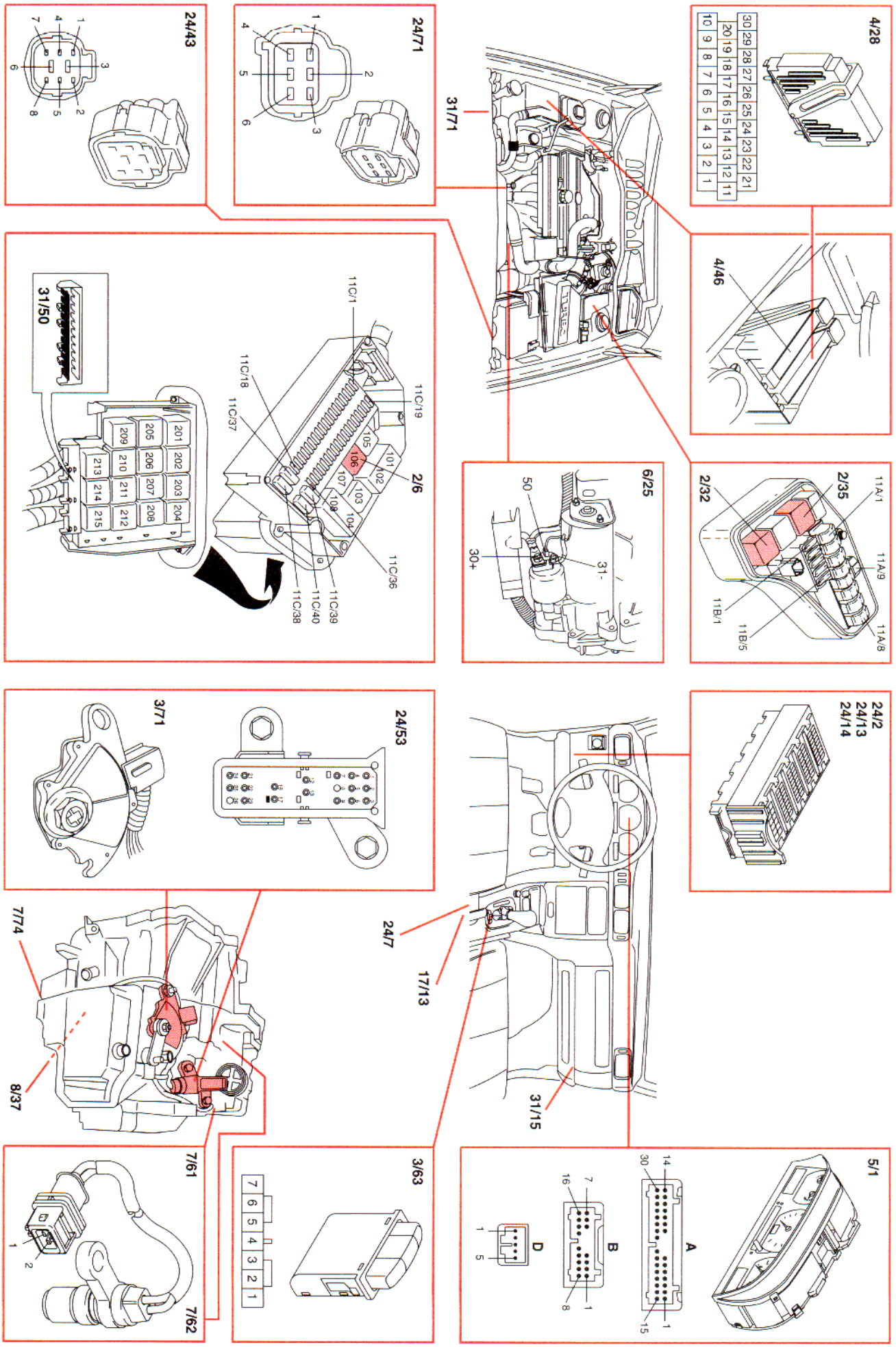

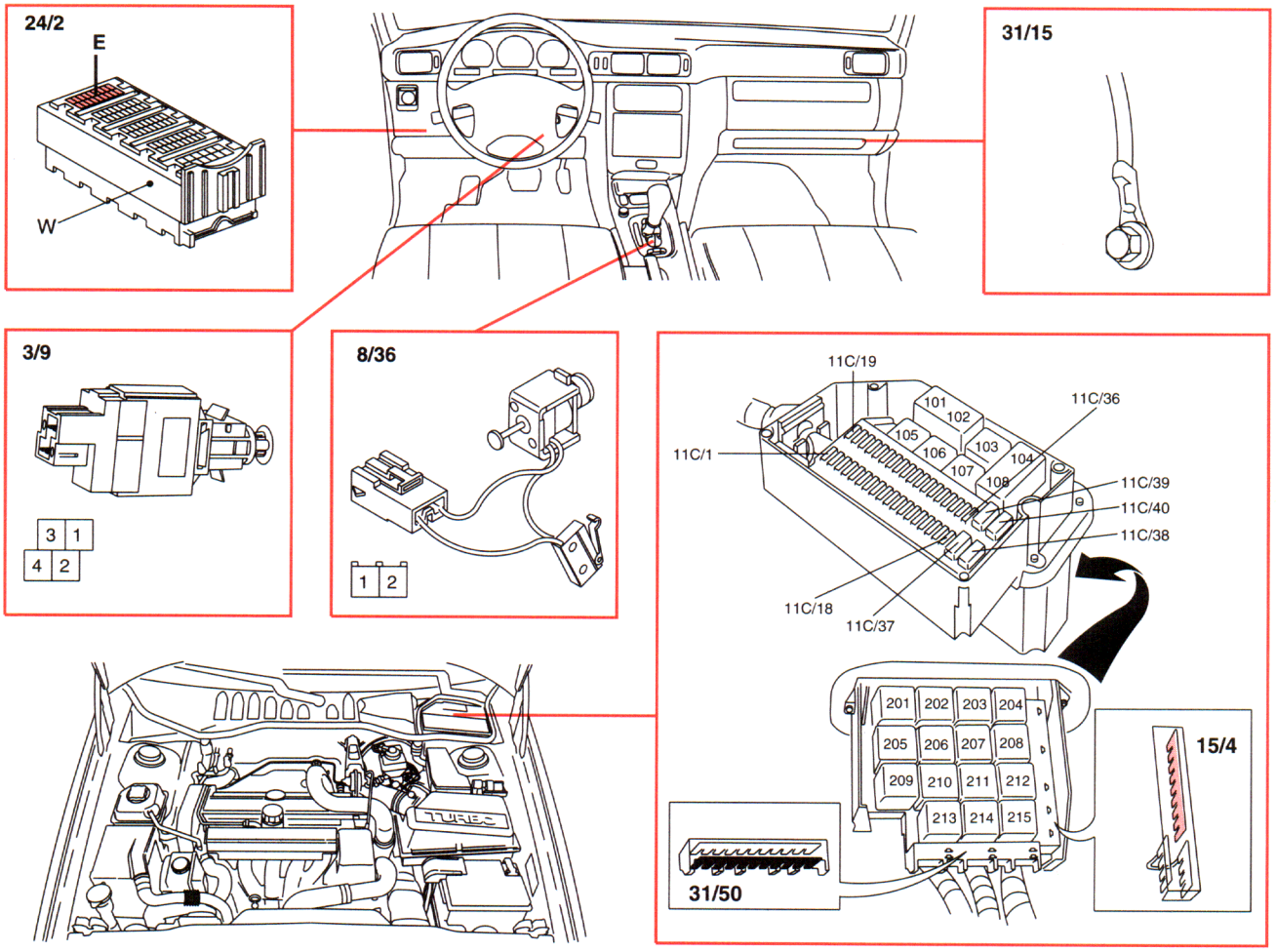
24/2
E
W
31/15
3/9
3 1
4 2
8/36
1 2
11C/19
11C/36
11C/1
101
102
103
104
105
106
107
108
11C/39
11C/40
11C/38
11C/18
11C/37
201 202 203 204
205 206 207 208
209 210 211 212
213 214 215
15/4
31/50

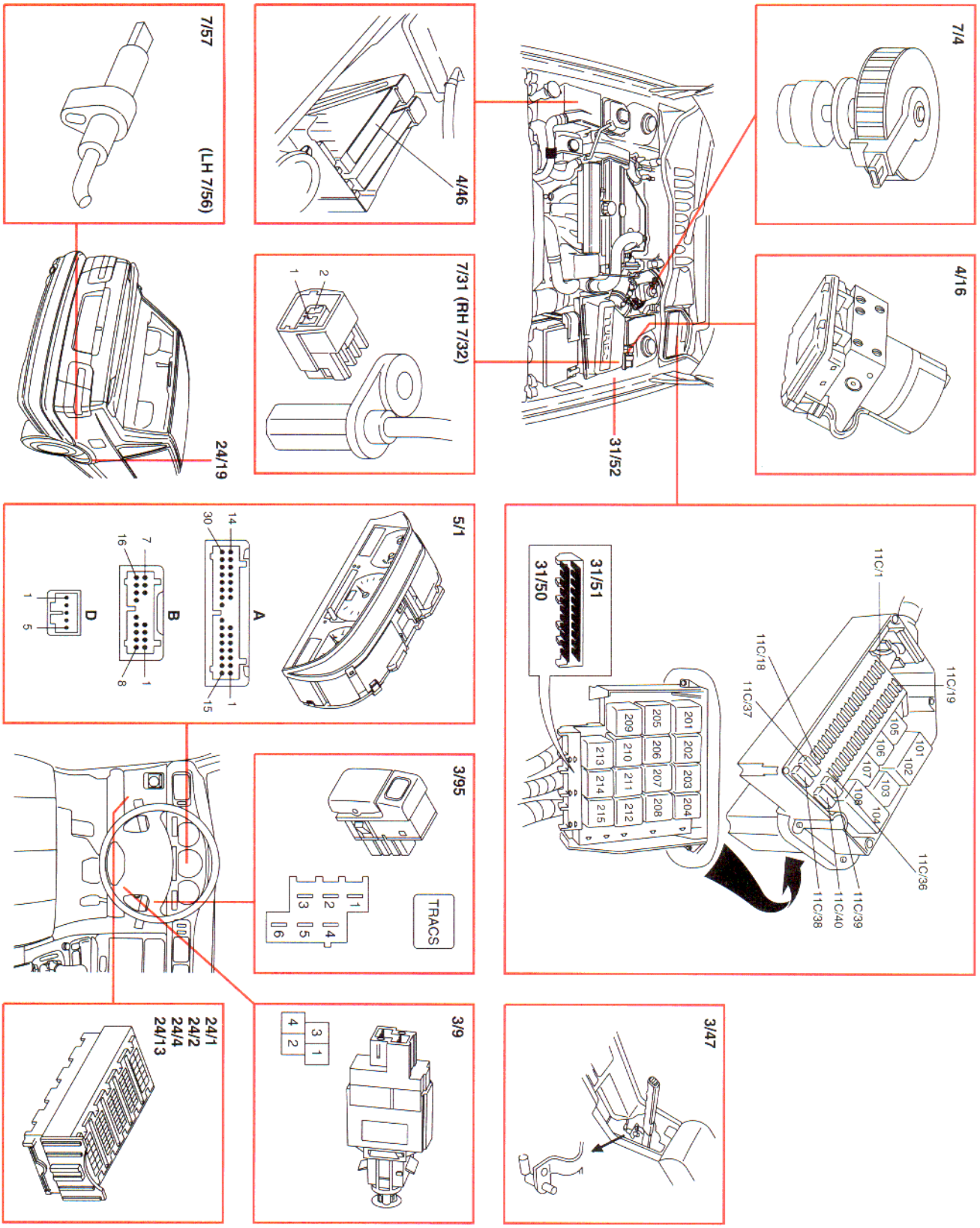
7/4
4/16
31/52
4/46
7/31 (RH 7/32)
7/57
(LH 7/56)
24/19
11C/1
11C/19
11C/18
11C/37
11C/36
11C/39
11C/40
11C/38
101
102
103
104
105
106
107
108
31/51
31/50
201
202
203
204
205
206
207
208
209
210
211
212
213
214
215
5/1
A
B
D
3/95
TRACS
3/47
3/9
24/1
24/2
24/4
24/13

With deadlock position:

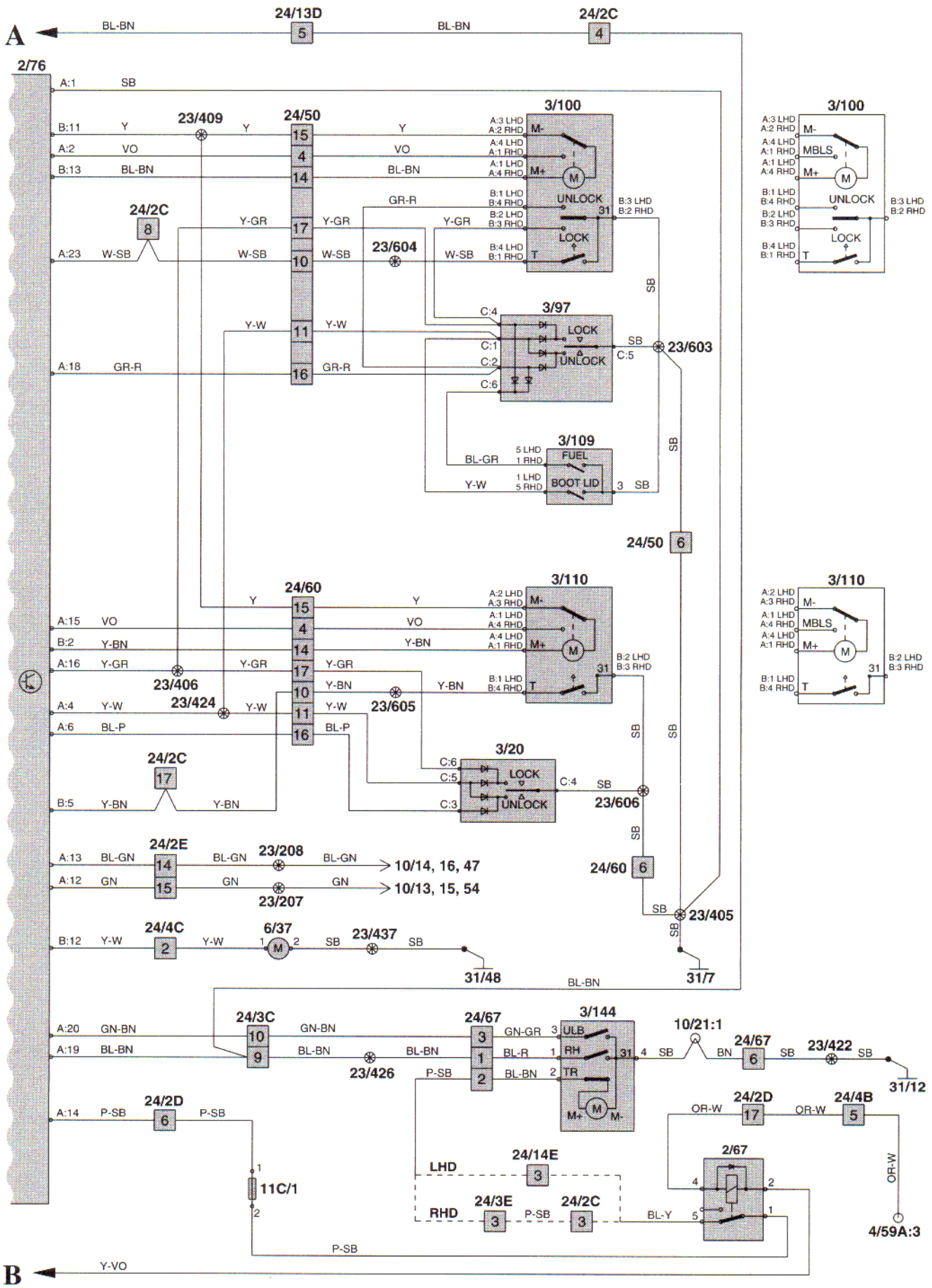

Central locking
C70 Convertible

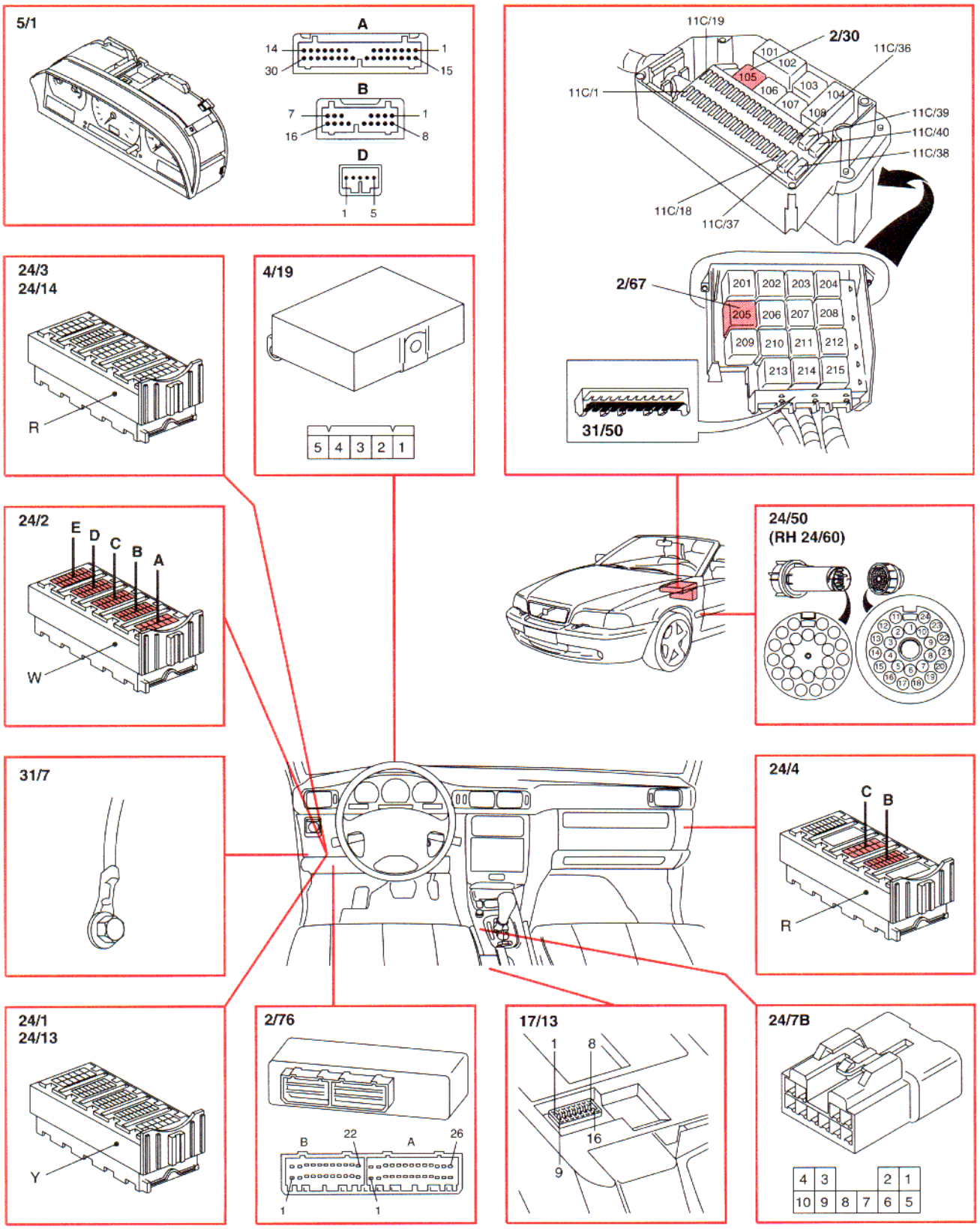

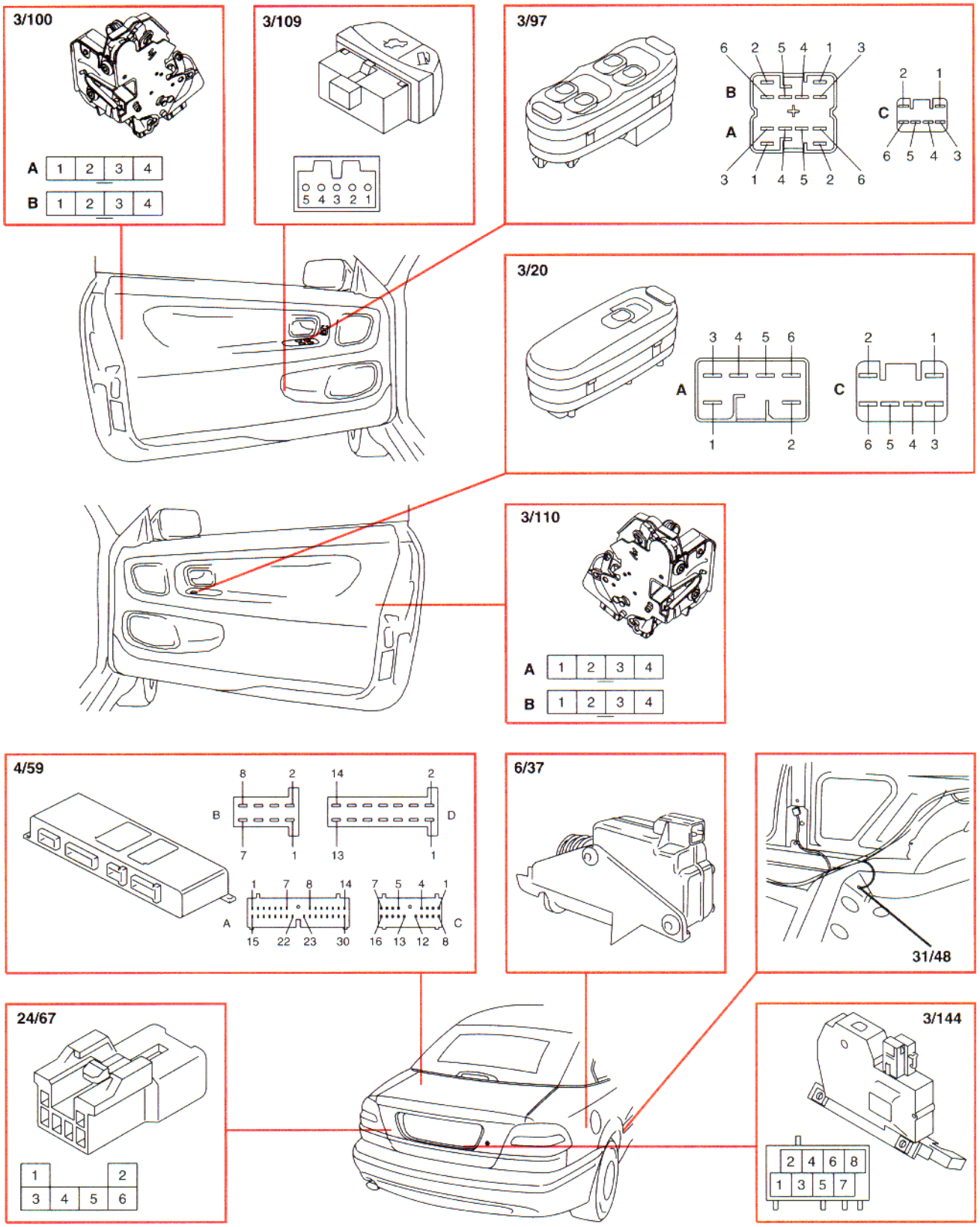
3/100
A 1 2 3 4
B 1 2 3 4
3/109
5 4 3 2 1
3/97
6 2 5 4 1 3
B
A
3 1 4 5 2 6
2 1
C
6 5 4 3
3/20
3 4 5 6
A
1 2
2 1
C
6 5 4 3
3/110
A 1 2 3 4
B 1 2 3 4
4/59
8 2 14 2
B
D
7 1 13 1
1 7 8 14 7 5 4 1
A
C
15 22 23 30 16 13 12 8
6/37
31/48
24/67
1 2
3 4 5 6
3/144
2 4 6 8
1 3 5 7

With deadlock position:

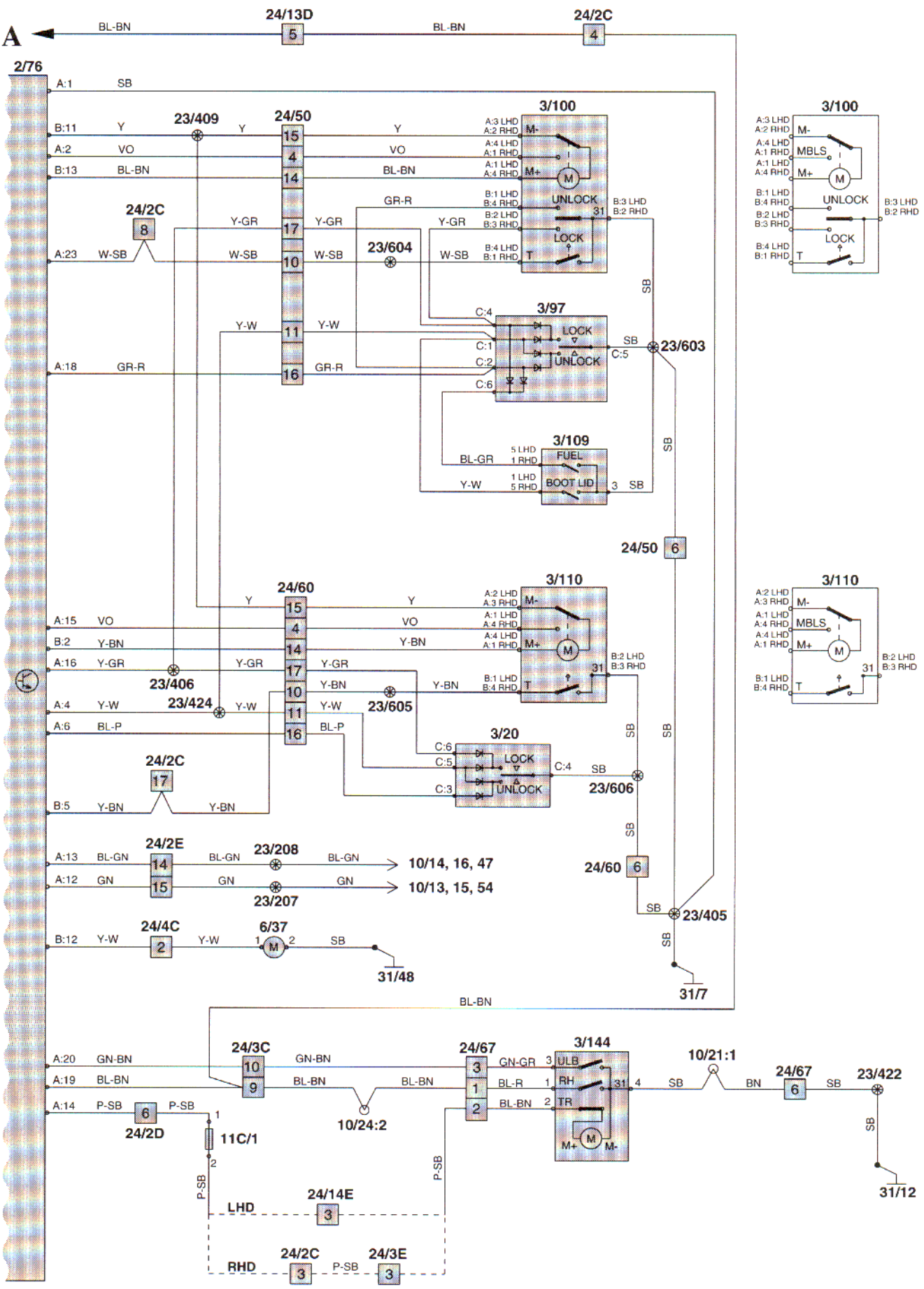

Central locking
C70 coupé

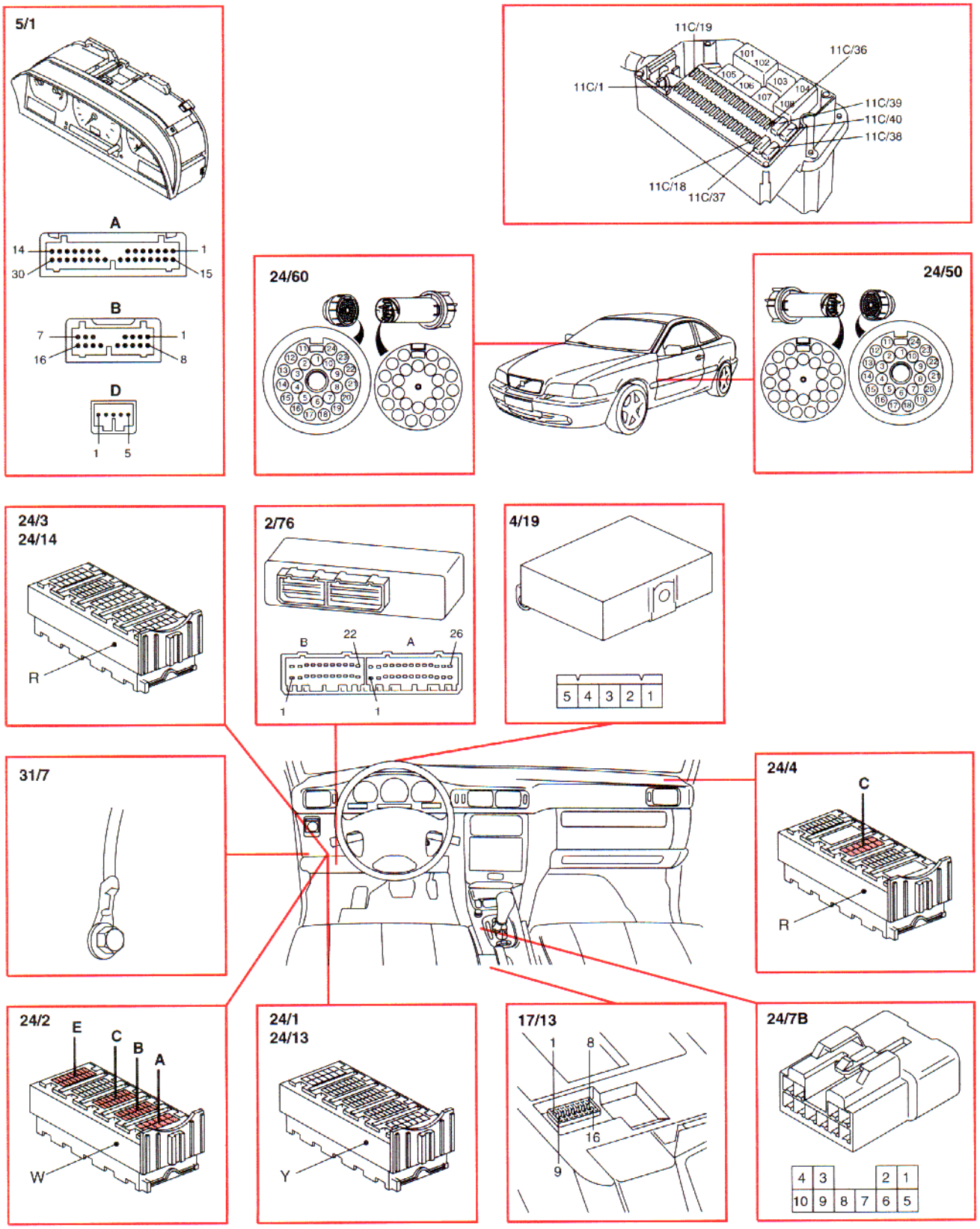

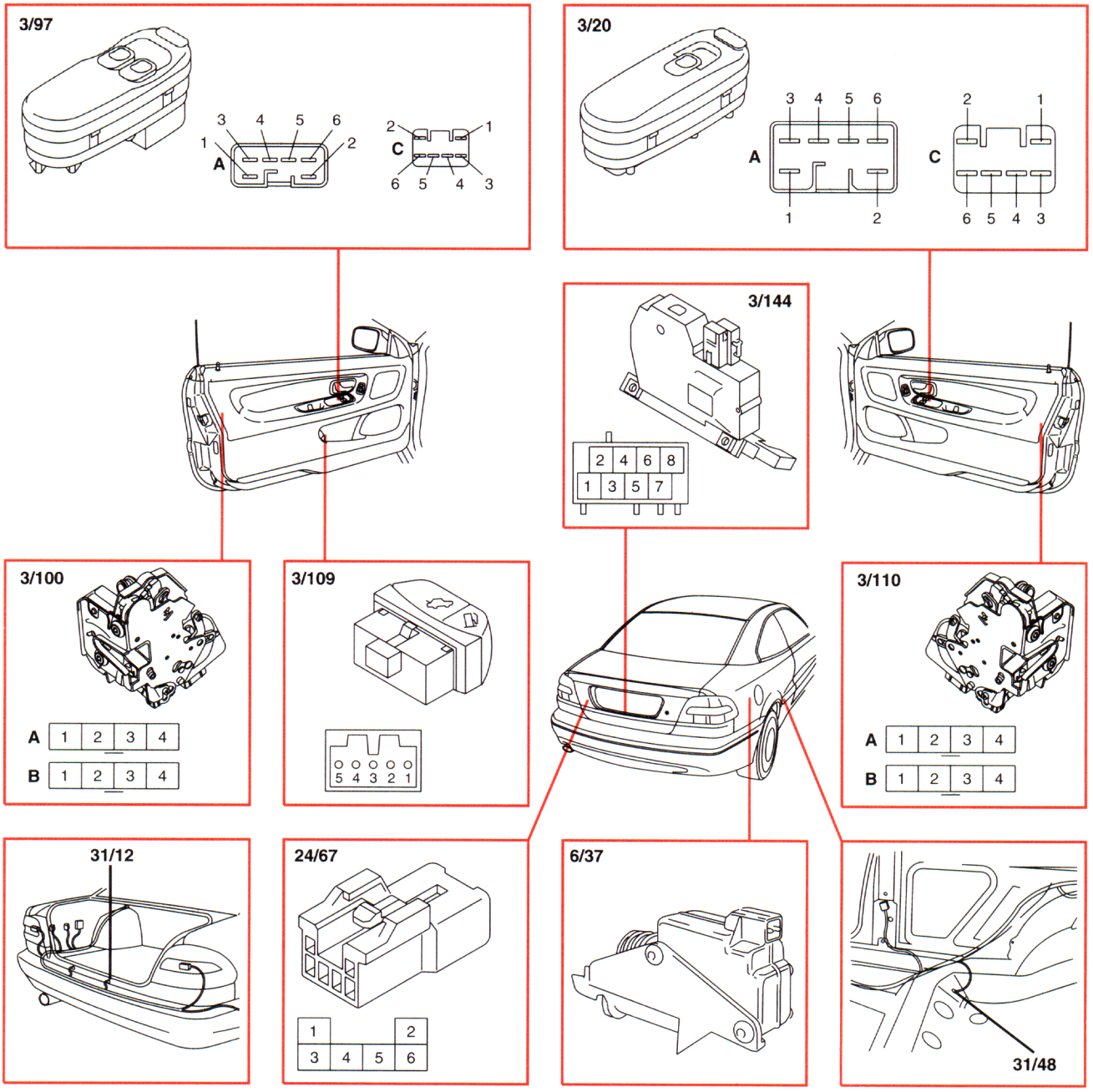
3/97
A
C
3/20
A
C
3/144
3/100
A
B
3/109
3/110
A
B
31/12
24/67
6/37
31/48

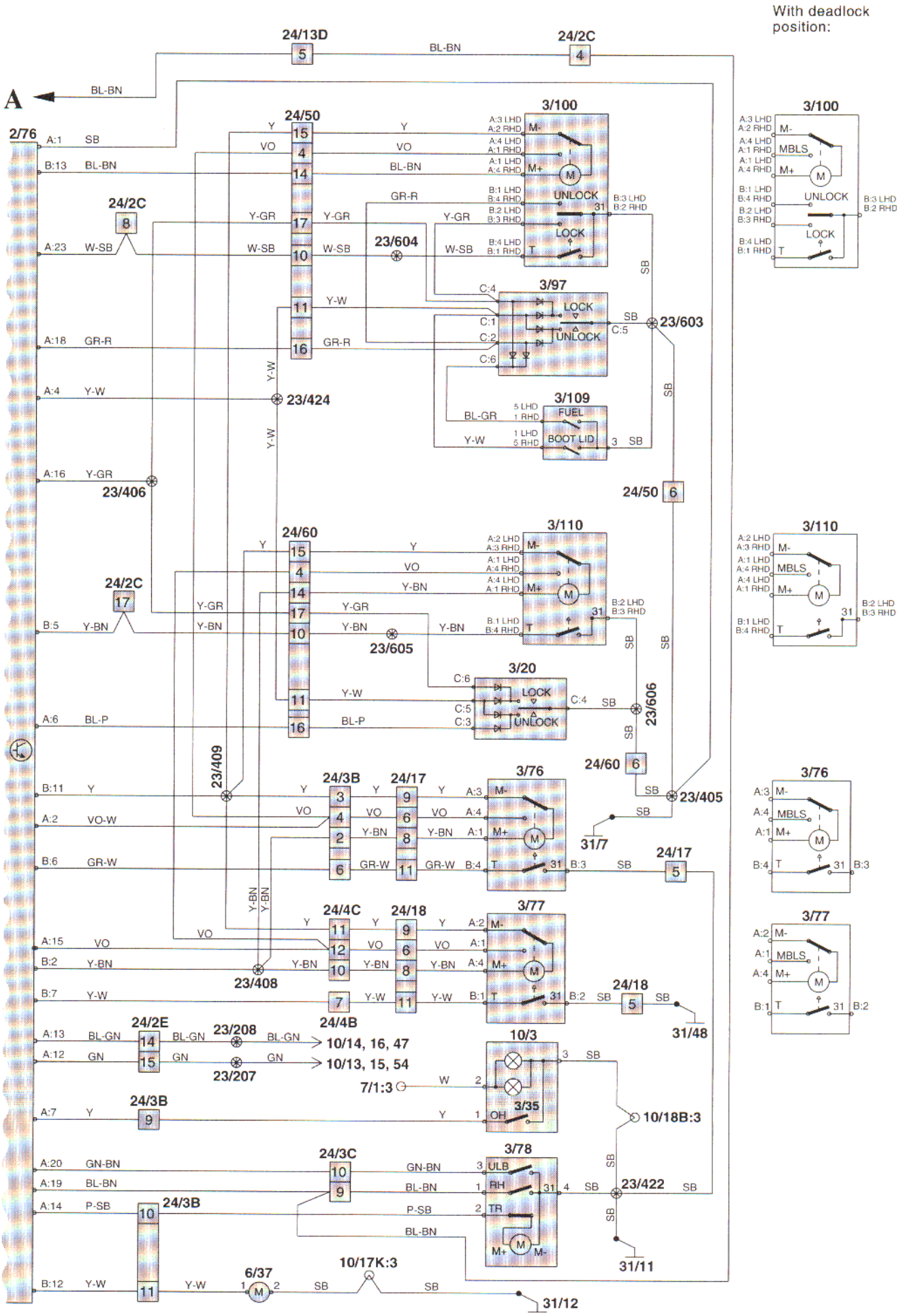
With deadlock position:
A
2/76
24/13D
24/2C
BL-BN
24/50
24/60
3/100
3/97
3/109
3/110
3/20
3/76
3/77
3/35
3/78
10/3
23/604
23/603
23/424
23/406
23/605
23/606
23/409
23/405
23/408
23/208
23/207
23/422
24/3B
24/17
24/4C
24/18
24/2E
24/4B
10/14, 16, 47
10/13, 15, 54
7/1:3
10/18B:3
31/7
31/48
31/11
31/12
6/37
10/17K:3
UNLOCK
LOCK
FUEL
BOOT LID
MBLS

Central locking
S70

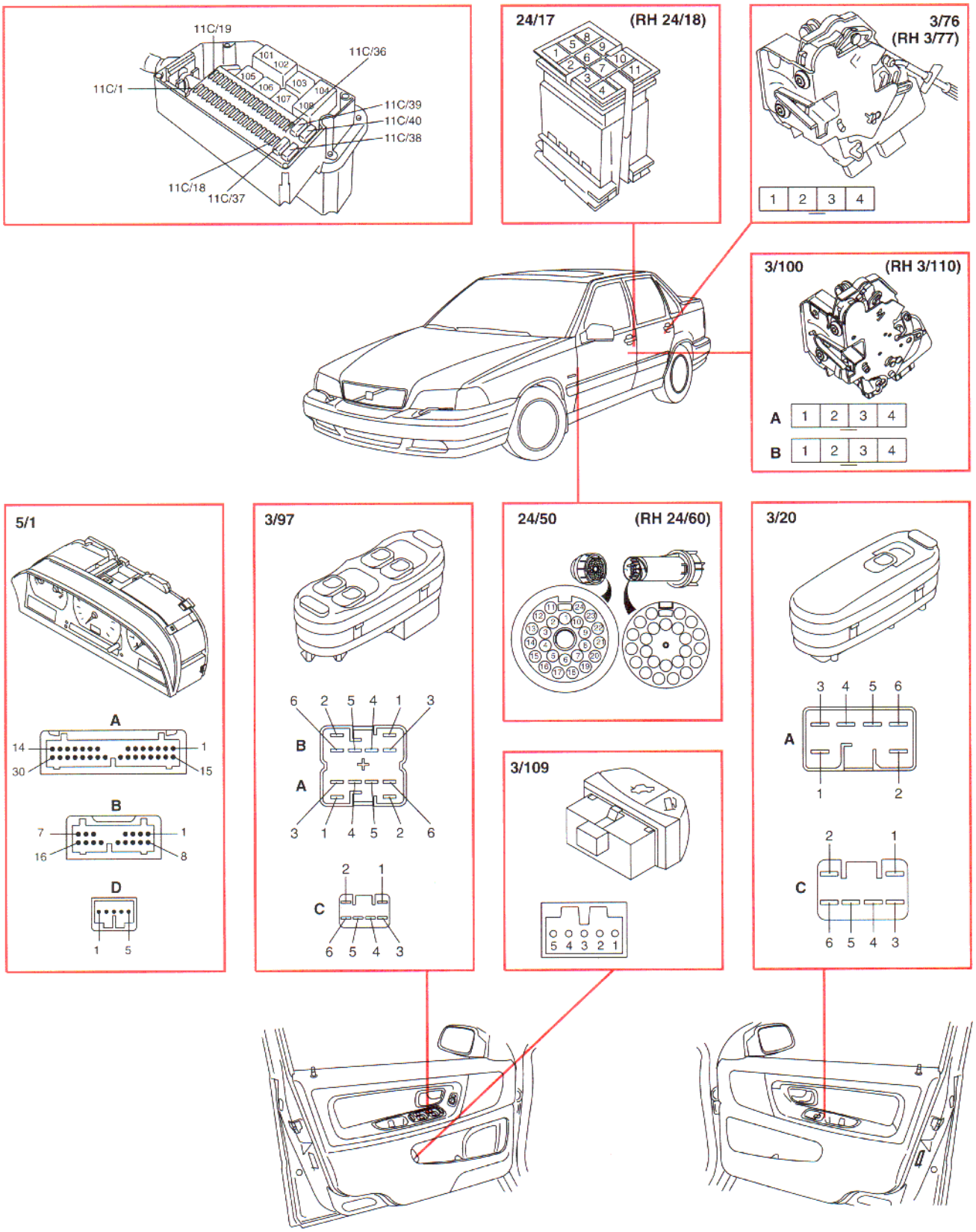

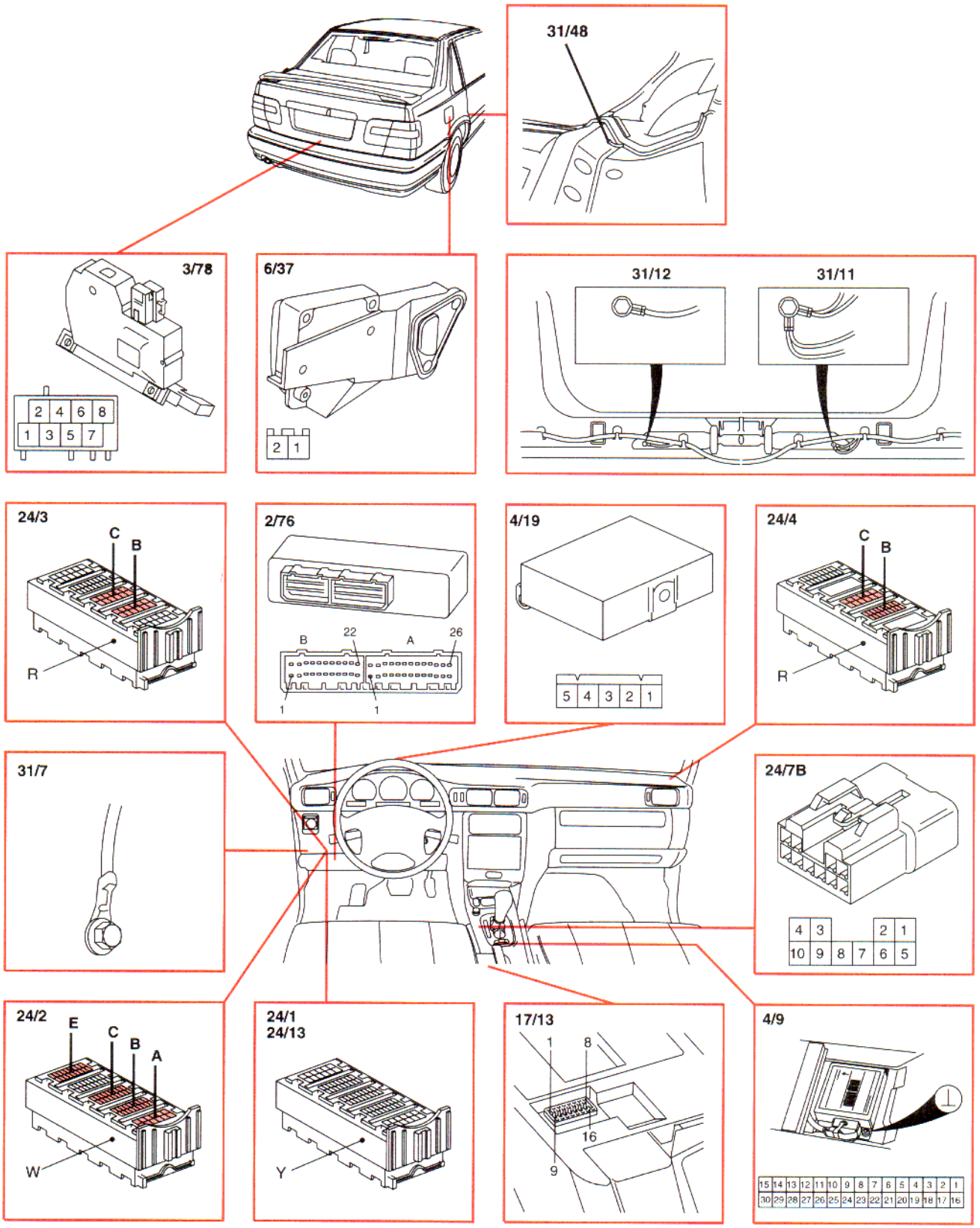
31/48
3/78
2 4 6 8
1 3 5 7
6/37
2 1
31/12
31/11
24/3
C
B
R
2/76
B
22
A
26
1
1
4/19
5 4 3 2 1
24/4
C
B
R
31/7
24/7B
4 3 2 1
10 9 8 7 6 5
24/2
E
C
B
A
W
24/1
24/13
Y
17/13
1
8
16
9
4/9
15 14 13 12 11 10 9 8 7 6 5 4 3 2 1
30 29 28 27 26 25 24 23 22 21 20 19 18 17 16

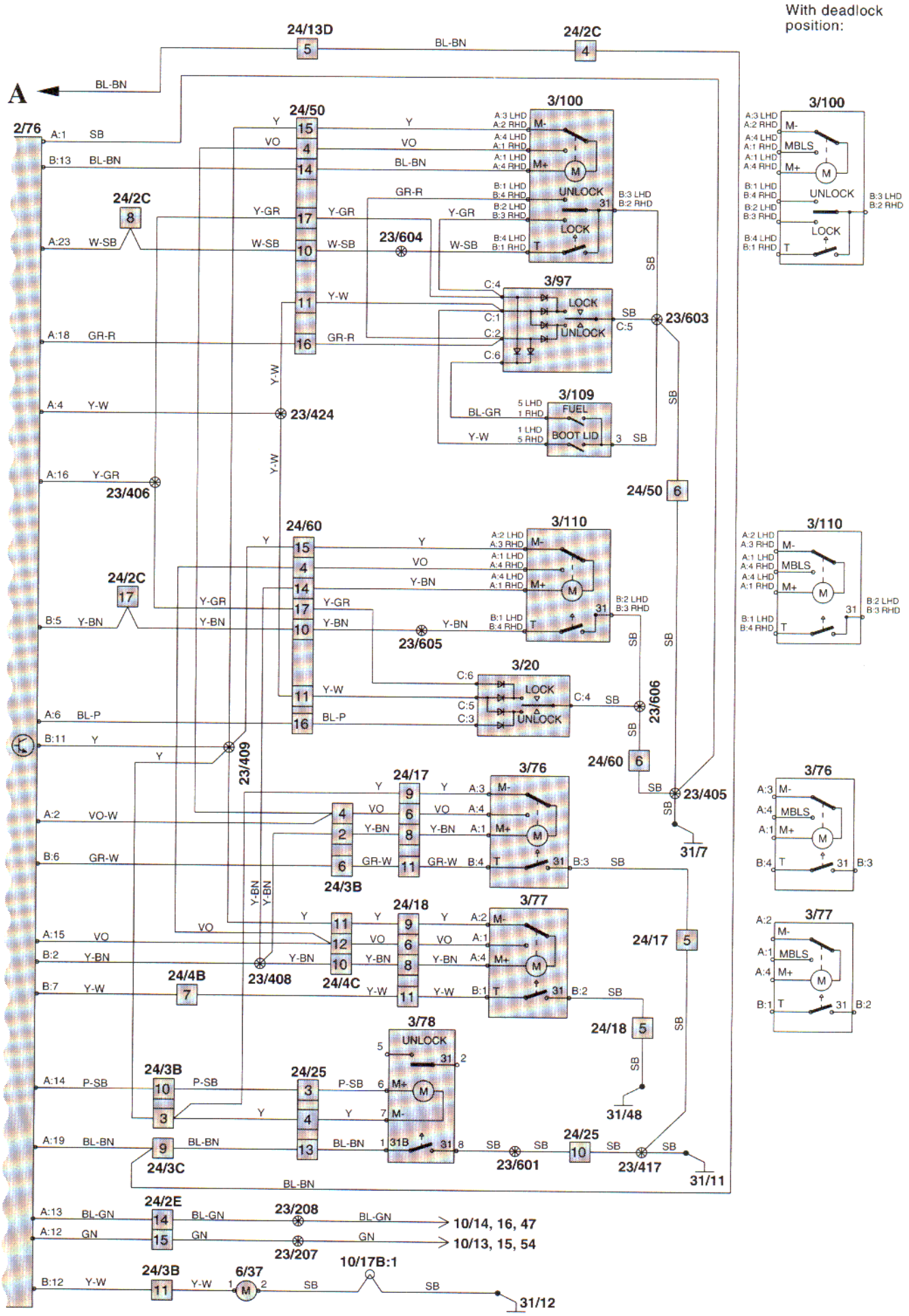
With deadlock position:
A
2/76
24/13D
24/2C
BL-BN
24/50
24/2C
3/100
3/97
3/109
23/604
23/603
23/424
23/406
24/50
24/60
24/2C
3/110
3/20
23/605
23/606
24/60
23/409
24/17
3/76
24/3B
24/18
3/77
24/4B
23/408
24/4C
24/17
24/18
3/78
24/3B
24/25
24/3C
23/601
24/25
23/417
31/7
31/48
31/11
24/2E
23/208
23/207
10/14, 16, 47
10/13, 15, 54
24/3B
6/37
10/17B:1
31/12

Central locking
V70

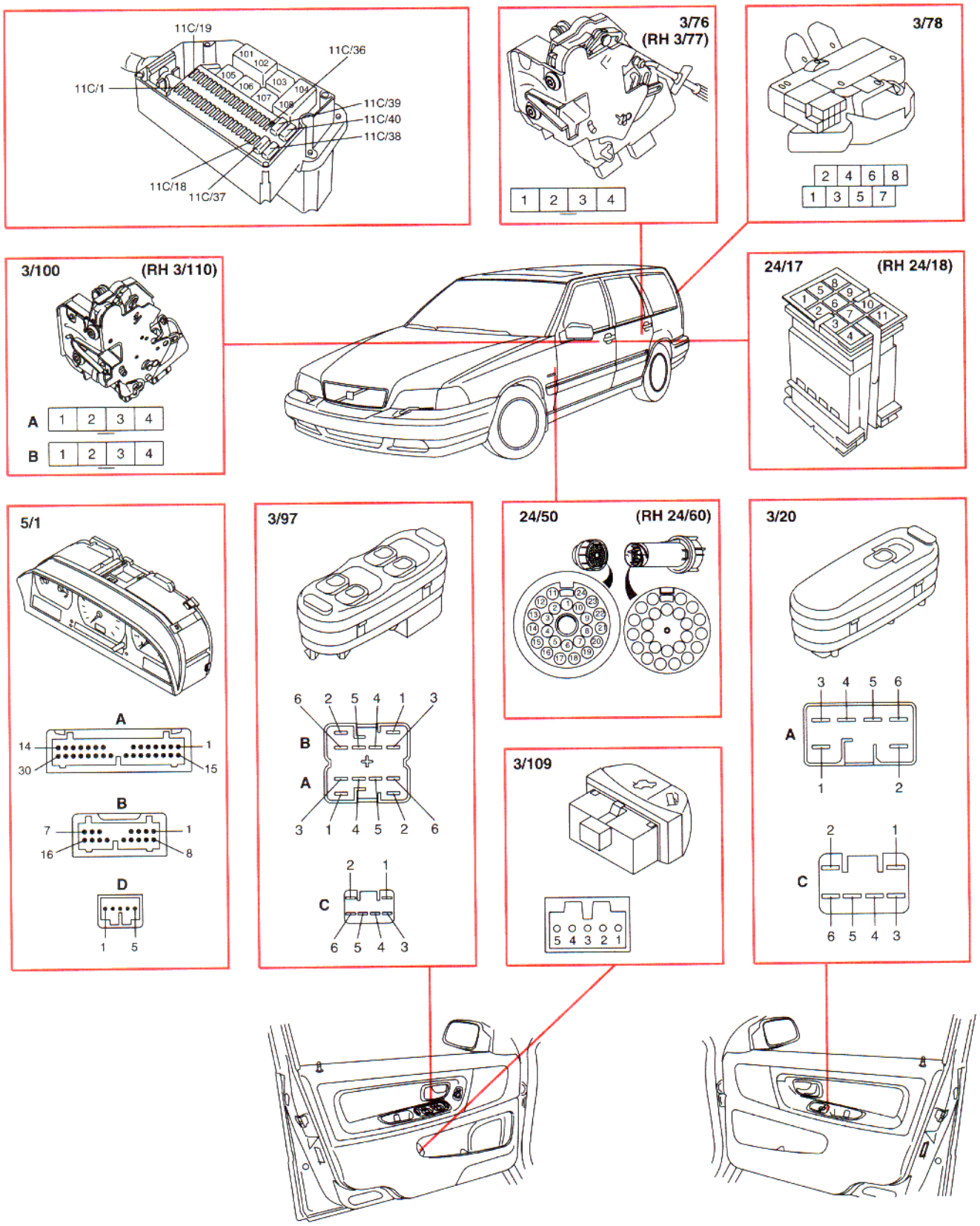

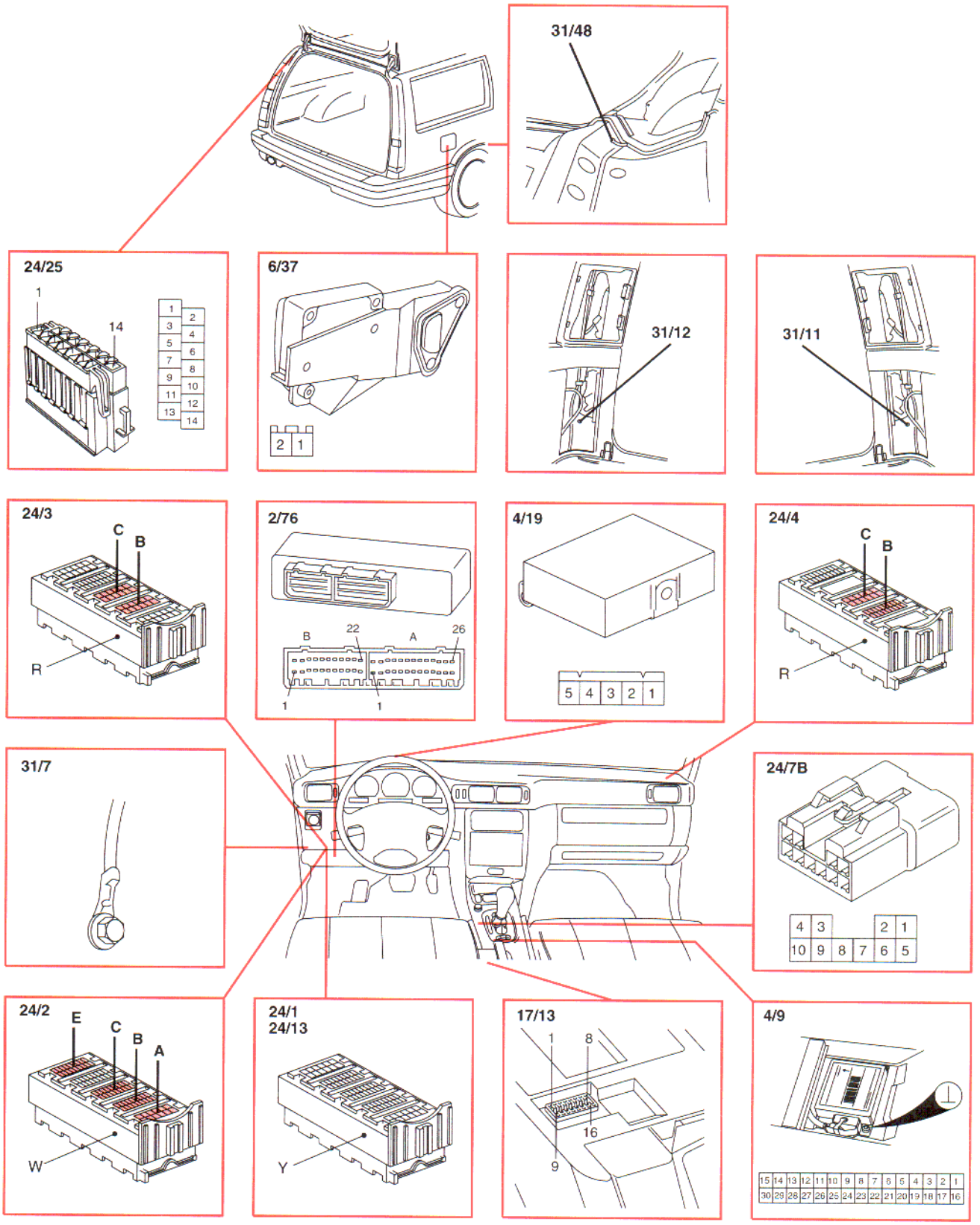
31/48
24/25
1
14
1 2
3 4
5 6
7 8
9 10
11 12
13 14
6/37
2 1
31/12
31/11
24/3
C
B
R
2/76
B
22
A
26
1
1
4/19
5 4 3 2 1
24/4
C
B
R
31/7
24/7B
4 3 2 1
10 9 8 7 6 5
24/2
E
C
B
A
W
24/1
24/13
Y
17/13
1
8
16
9
4/9
15 14 13 12 11 10 9 8 7 6 5 4 3 2 1
30 29 28 27 26 25 24 23 22 21 20 19 18 17 16

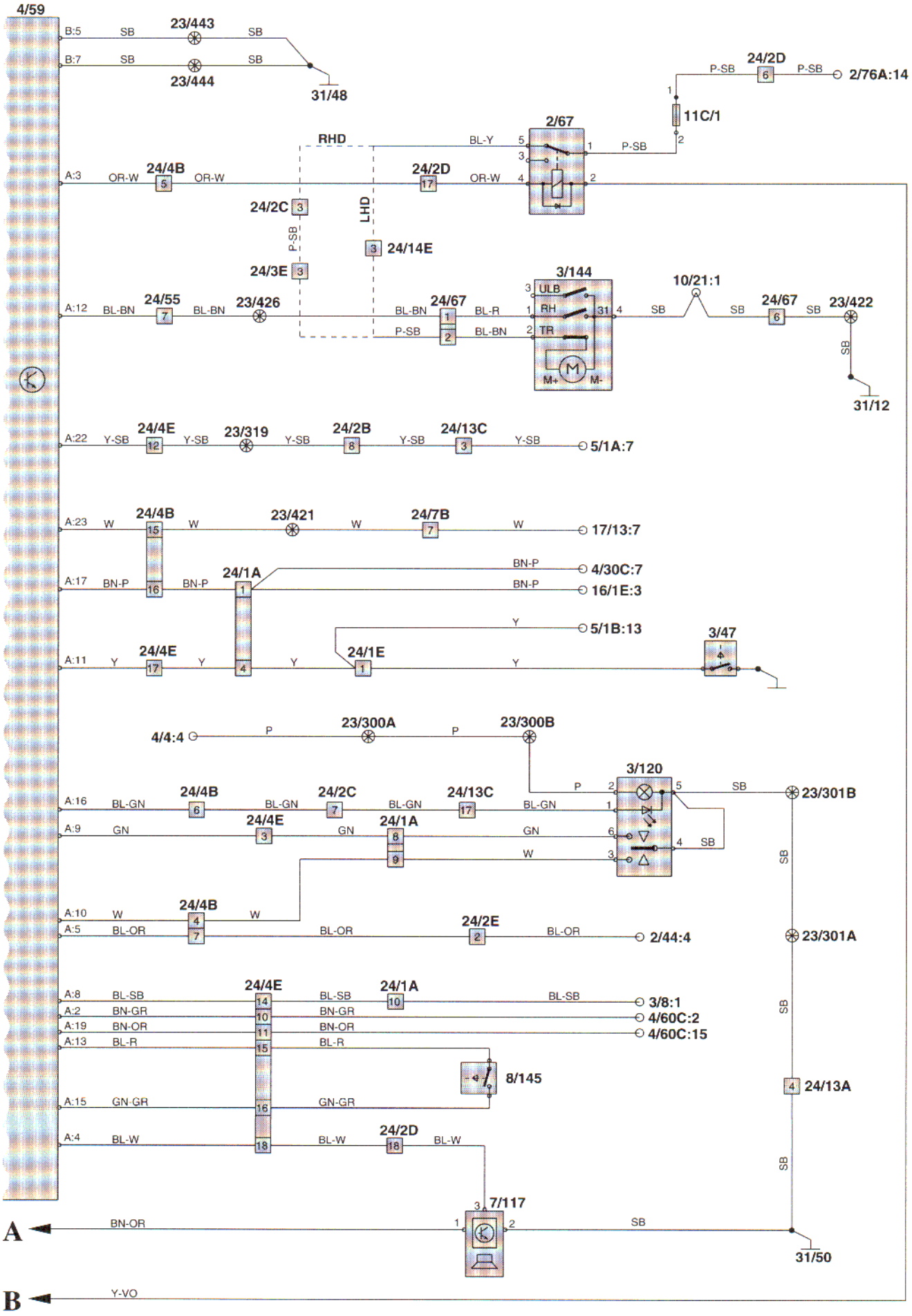
4/59
B:5
SB
23/443
SB
B:7
SB
23/444
SB
31/48
24/2D
P-SB
6
P-SB
2/76A:14
11C/1
2/67
RHD
BL-Y
P-SB
A:3
OR-W
24/4B
5
OR-W
24/2D
17
OR-W
24/2C
3
LHD
P-SB
24/14E
24/3E
3
3/144
ULB
RH
TR
M+
M-
10/21:1
A:12
BL-BN
24/55
7
BL-BN
23/426
BL-BN
24/67
1
BL-R
P-SB
2
BL-BN
SB
SB
24/67
6
SB
23/422
SB
31/12
A:22
Y-SB
24/4E
12
Y-SB
23/319
Y-SB
24/2B
8
Y-SB
24/13C
3
Y-SB
5/1A:7
A:23
W
24/4B
15
W
23/421
W
24/7B
7
W
17/13:7
A:17
BN-P
16
BN-P
24/1A
1
BN-P
4/30C:7
BN-P
16/1E:3
Y
5/1B:13
3/47
A:11
Y
24/4E
17
Y
4
Y
24/1E
1
Y
4/4:4
P
23/300A
P
23/300B
3/120
A:16
BL-GN
24/4B
6
BL-GN
24/2C
7
BL-GN
24/13C
17
BL-GN
P
SB
23/301B
A:9
GN
24/4E
3
GN
24/1A
8
GN
9
W
SB
A:10
W
24/4B
4
W
A:5
BL-OR
7
BL-OR
24/2E
2
BL-OR
2/44:4
23/301A
A:8
BL-SB
24/4E
14
BL-SB
24/1A
10
BL-SB
3/8:1
A:2
BN-GR
10
BN-GR
4/60C:2
A:19
BN-OR
11
BN-OR
4/60C:15
A:13
BL-R
15
BL-R
8/145
24/13A
A:15
GN-GR
16
GN-GR
A:4
BL-W
18
BL-W
24/2D
18
BL-W
7/117
A
BN-OR
SB
31/50
B
Y-VO

Soft top operation

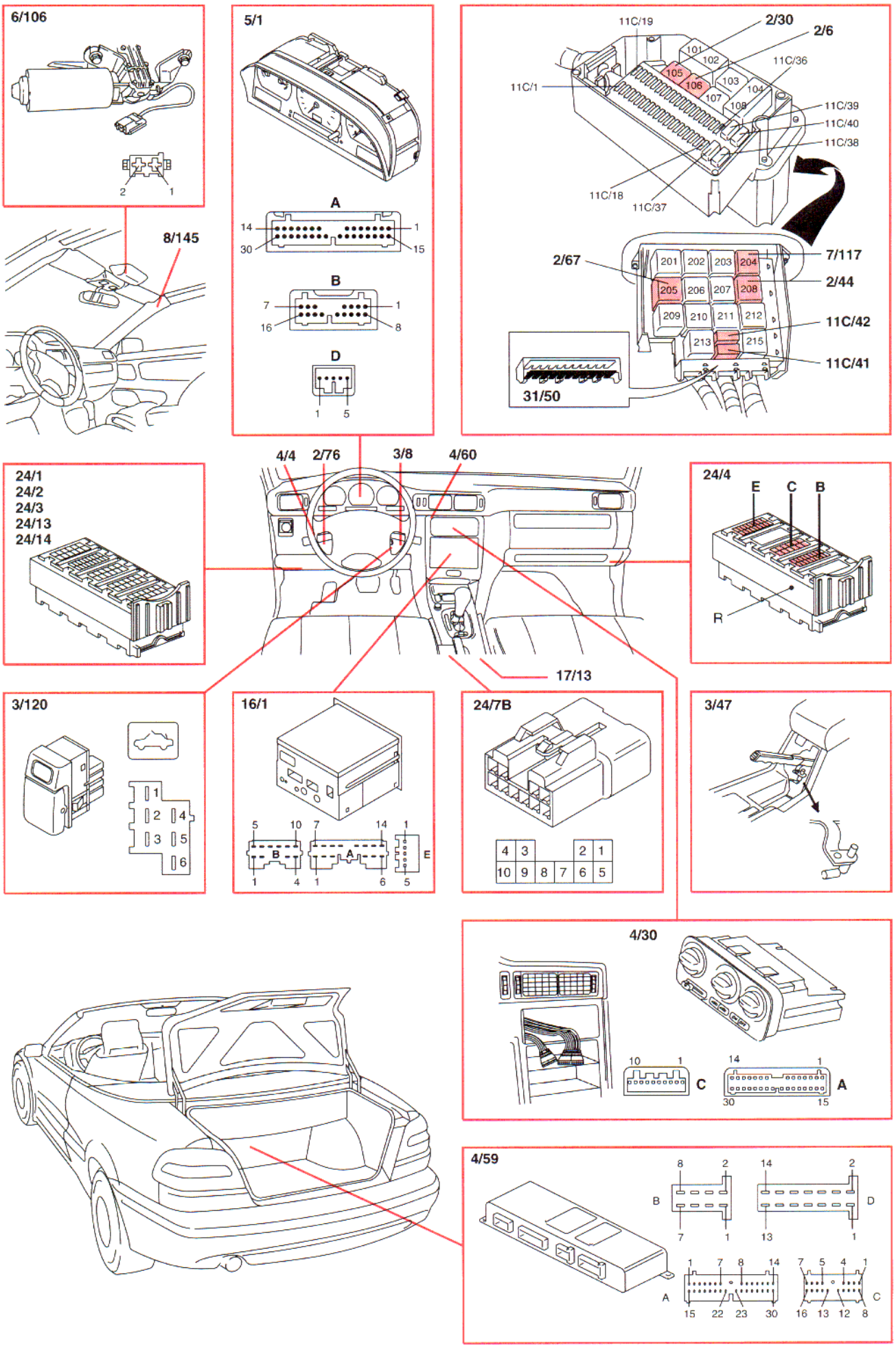

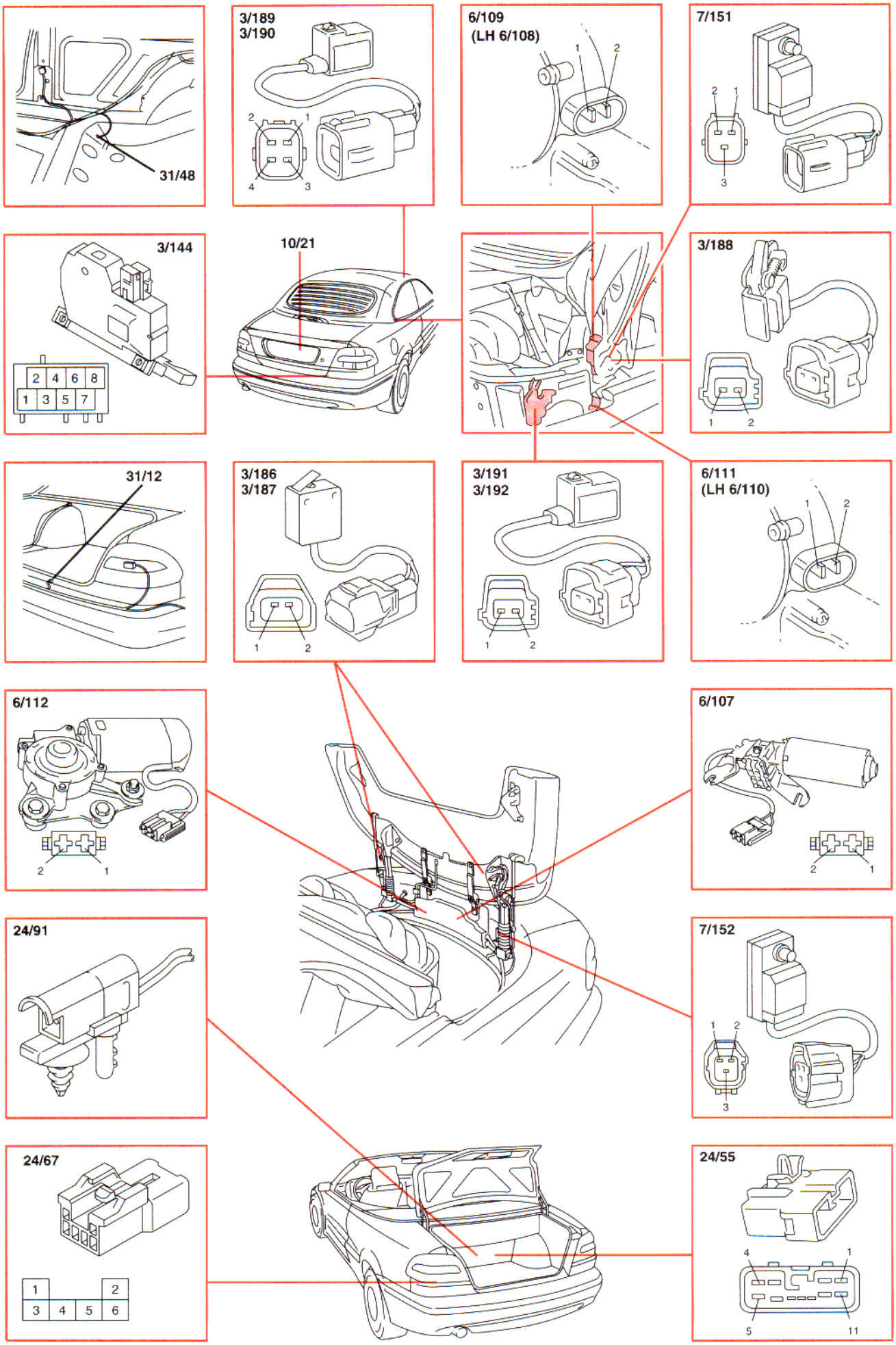
31/48
3/189
3/190
2
1
4
3
6/109
(LH 6/108)
1
2
7/151
2
1
3
3/144
2 4 6 8
1 3 5 7
10/21
3/188
1
2
31/12
3/186
3/187
1
2
3/191
3/192
1
2
6/111
(LH 6/110)
1
2
6/112
2
1
6/107
2
1
24/91
7/152
1
2
3
24/67
1
2
3 4 5 6
24/55
4
1
5
11

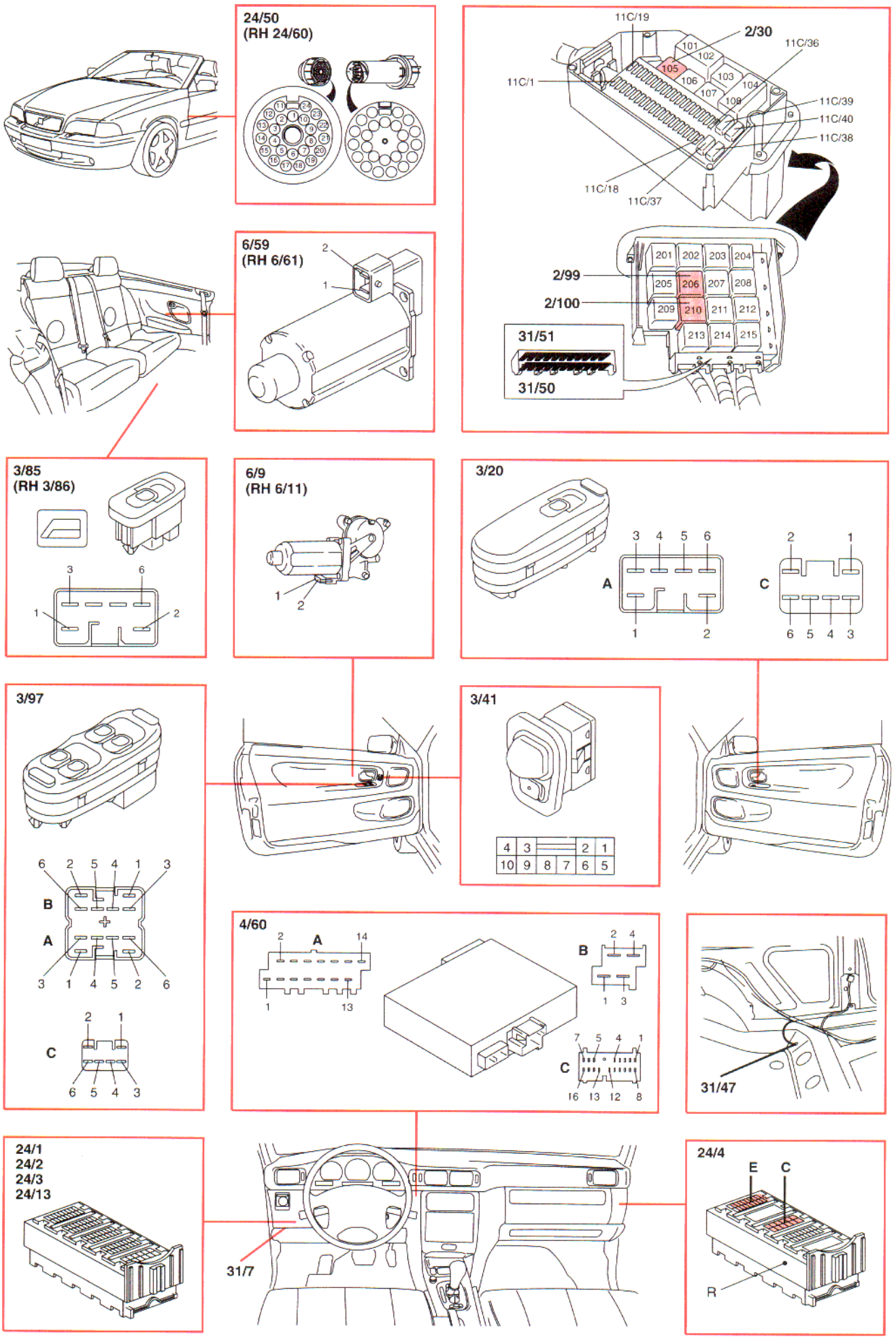
24/50
(RH 24/60)
6/59
(RH 6/61)
11C/19
2/30
11C/36
11C/1
11C/39
11C/40
11C/38
11C/18
11C/37
2/99
2/100
31/51
31/50
3/85
(RH 3/86)
6/9
(RH 6/11)
3/20
A
C
3/97
B
3/41
4/60
31/47
24/1
24/2
24/3
24/13
31/7
24/4
E
C
R

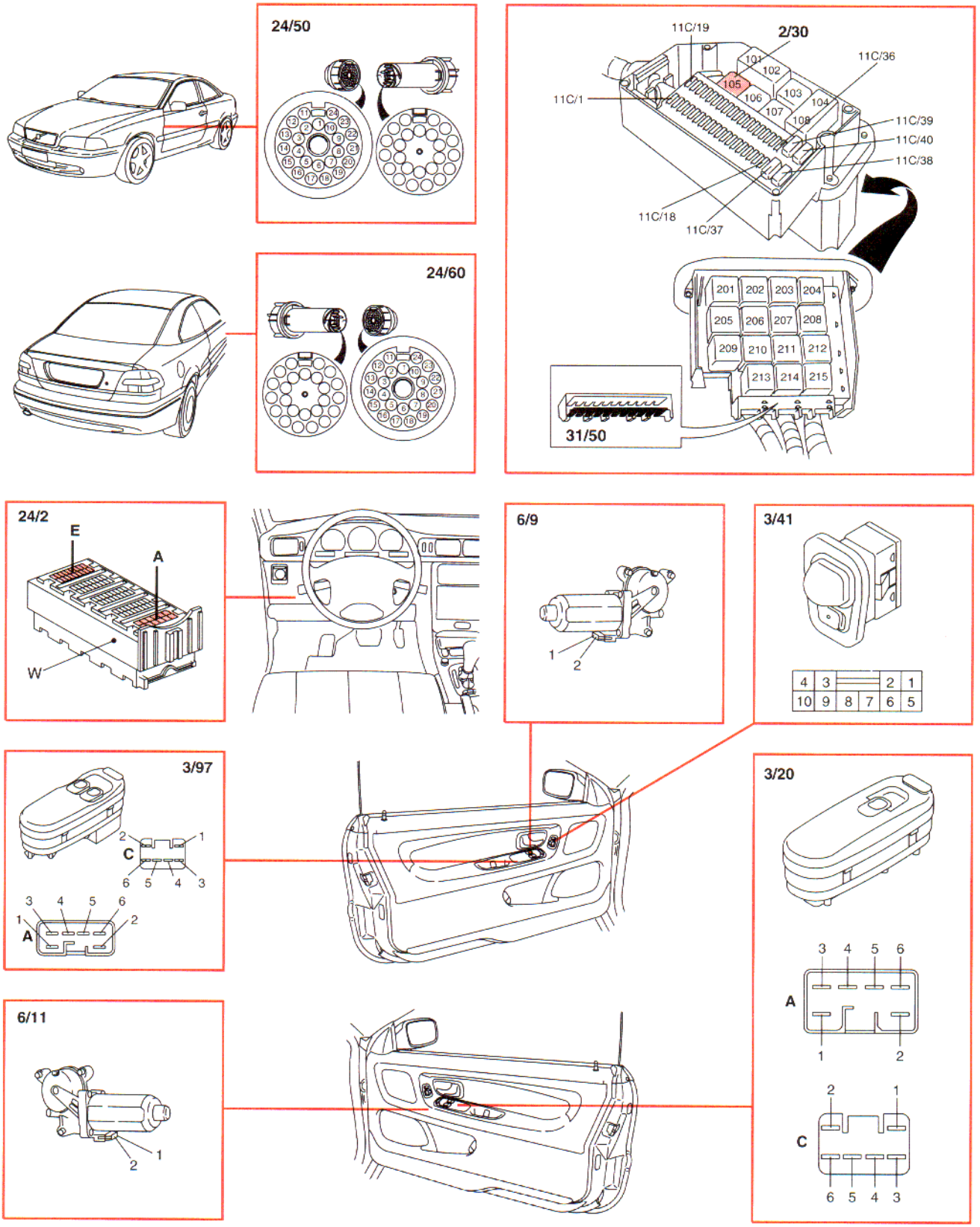
24/50
24/60
2/30
11C/19
11C/36
11C/1
11C/39
11C/40
11C/38
11C/18
11C/37
101
102
103
104
105
106
107
108
201
202
203
204
205
206
207
208
209
210
211
212
213
214
215
31/50
24/2
E
A
W
6/9
1
2
3/41
4 3 2 1
10 9 8 7 6 5
3/97
C
A
3/20
A
C
6/11

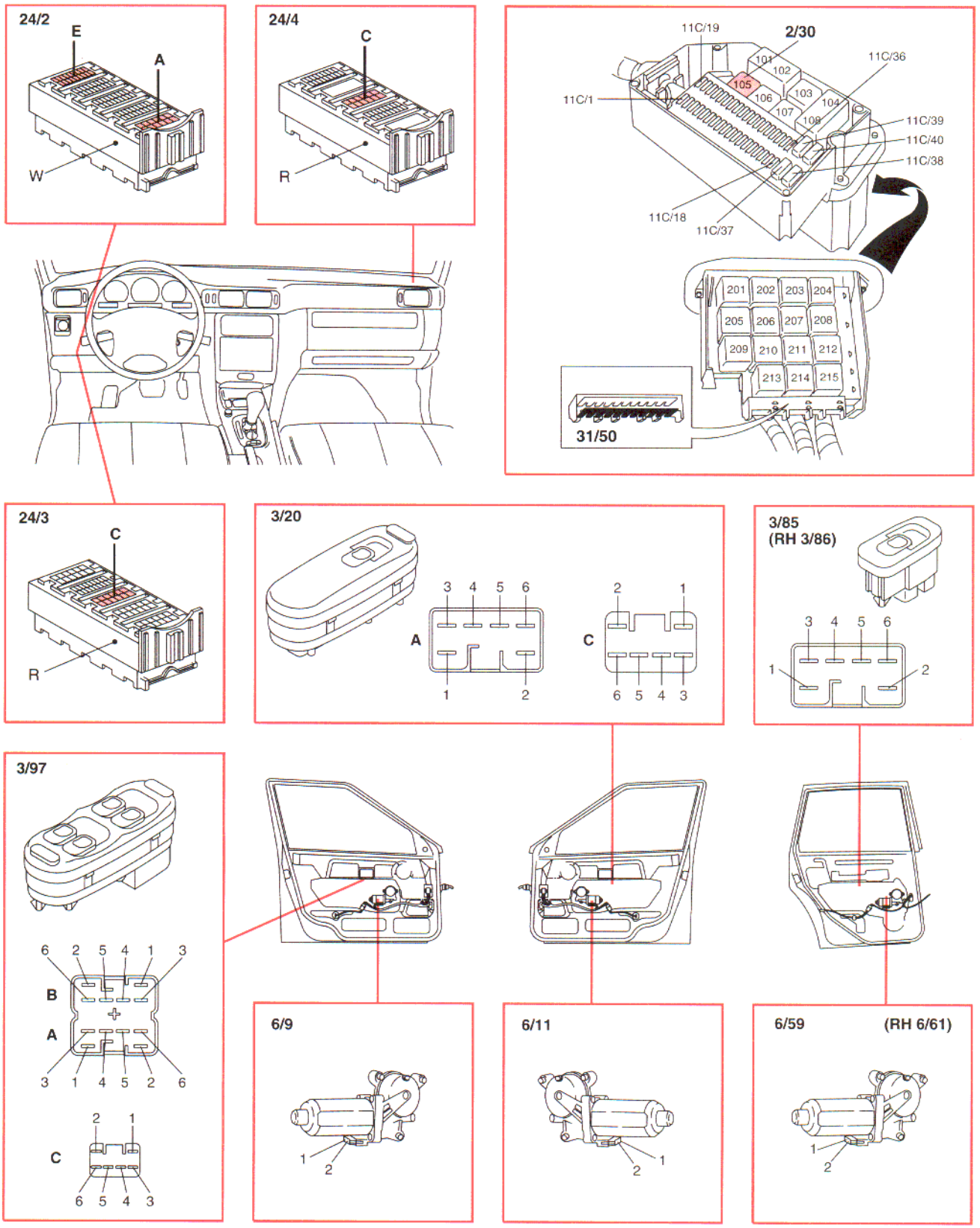
24/2
E
A
W
24/4
C
R
11C/19
2/30
11C/36
101
102
105
106
103
104
107
108
11C/1
11C/39
11C/40
11C/38
11C/18
11C/37
201
202
203
204
205
206
207
208
209
210
211
212
213
214
215
31/50
24/3
C
R
3/20
A
3 4 5 6
1 2
C
2 1
6 5 4 3
3/85
(RH 3/86)
3 4 5 6
1 2
3/97
6 2 5 4 1 3
B
A
3 1 4 5 2 6
C
2 1
6 5 4 3
6/9
1 2
6/11
2 1
6/59
(RH 6/61)
1 2

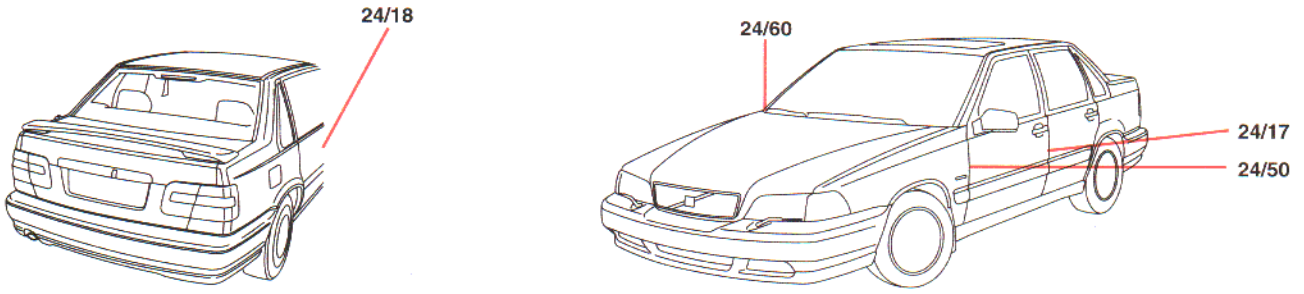
24/18
24/60
24/17
24/50

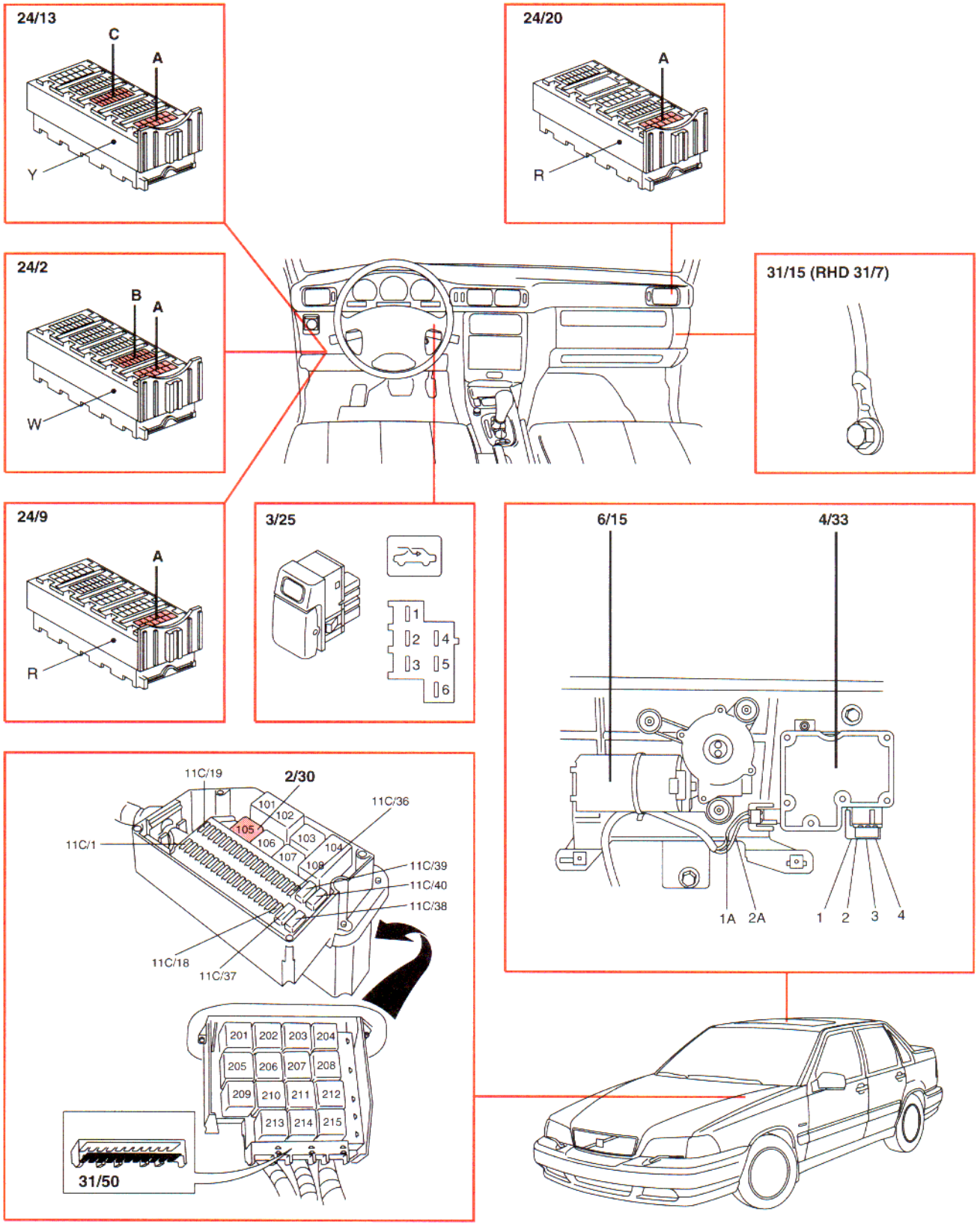
24/13
C
A
Y
24/20
A
R
24/2
B
A
W
31/15 (RHD 31/7)
24/9
A
R
3/25
1
2
3
4
5
6
6/15
4/33
1A
2A
1
2
3
4
11C/19
2/30
11C/36
11C/1
101
102
105
106
103
104
107
108
11C/39
11C/40
11C/38
11C/18
11C/37
201
202
203
204
205
206
207
208
209
210
211
212
213
214
215
31/50

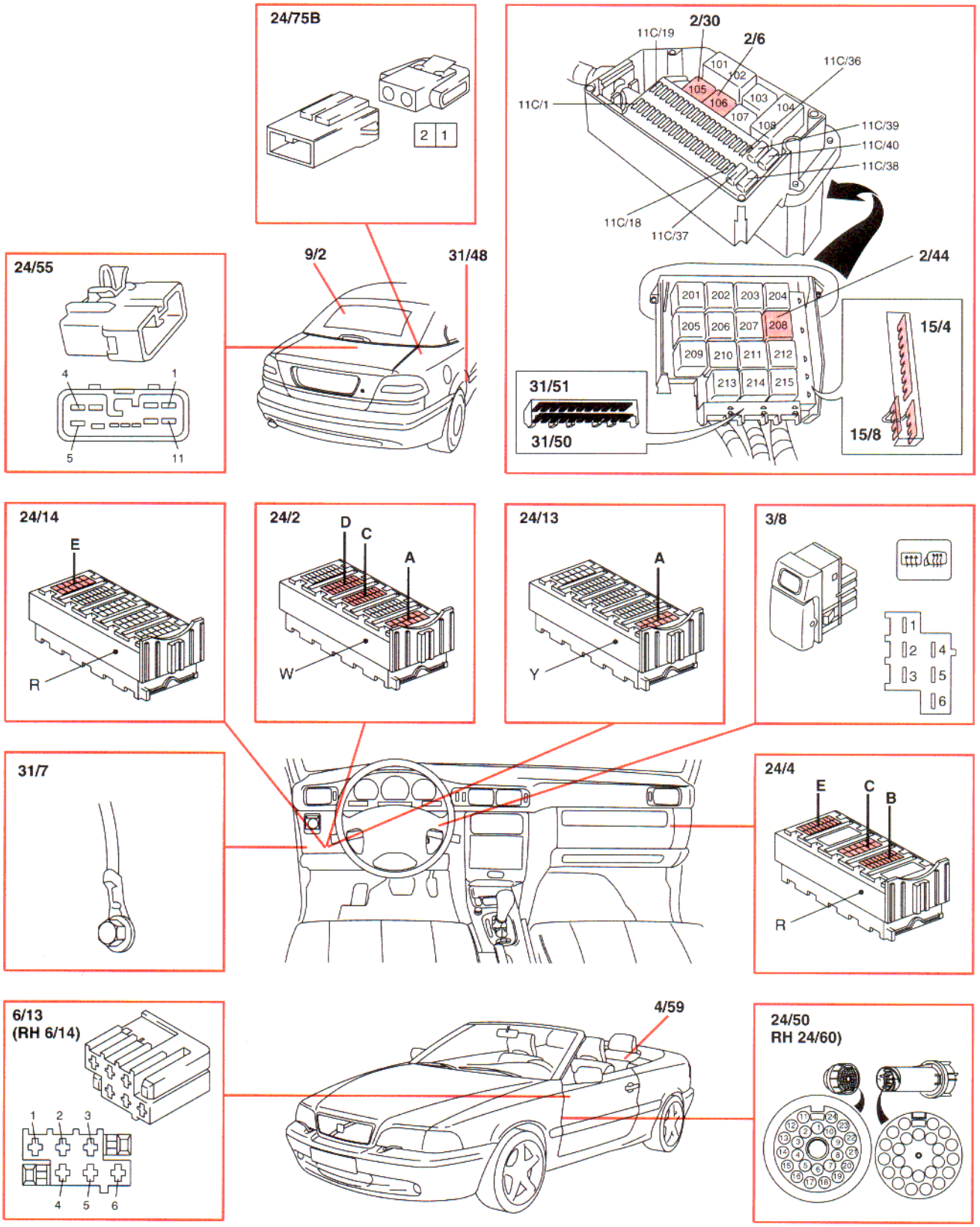
24/75B
2 1
2/30
11C/19
2/6
11C/36
101
102
105
106
103
104
107
108
11C/1
11C/39
11C/40
11C/38
11C/18
11C/37
2/44
201 202 203 204
205 206 207 208
209 210 211 212
213 214 215
15/4
15/8
31/51
31/50
24/55
4
1
5
11
9/2
31/48
24/14
E
R
24/2
D
C
A
W
24/13
A
Y
3/8
1
2
3
4
5
6
31/7
24/4
E
C
B
R
6/13
(RH 6/14)
1 2 3
4 5 6
4/59
24/50
RH 24/60)

Heated rear window and heated door mirrors
C70 coupé, S70, V70

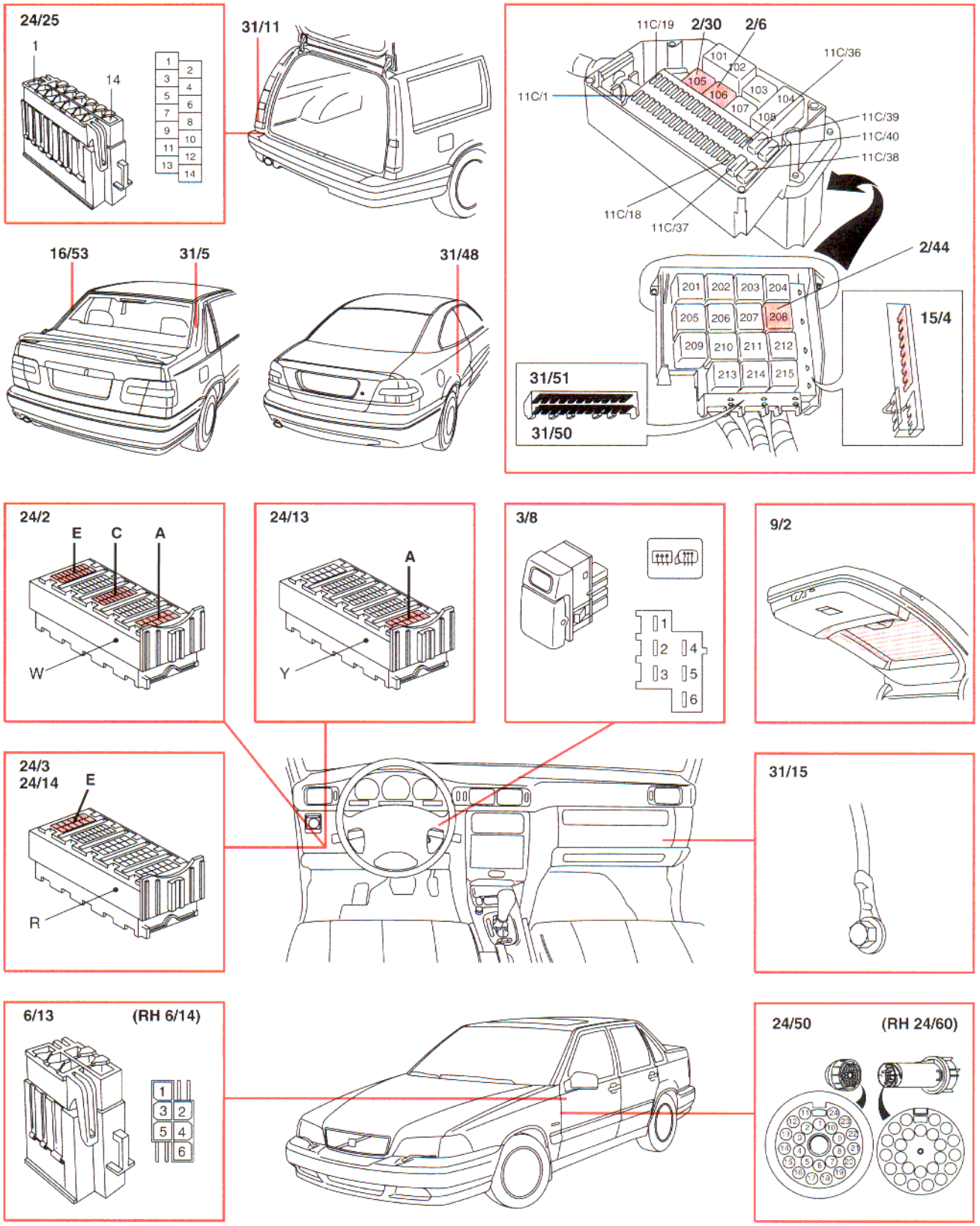

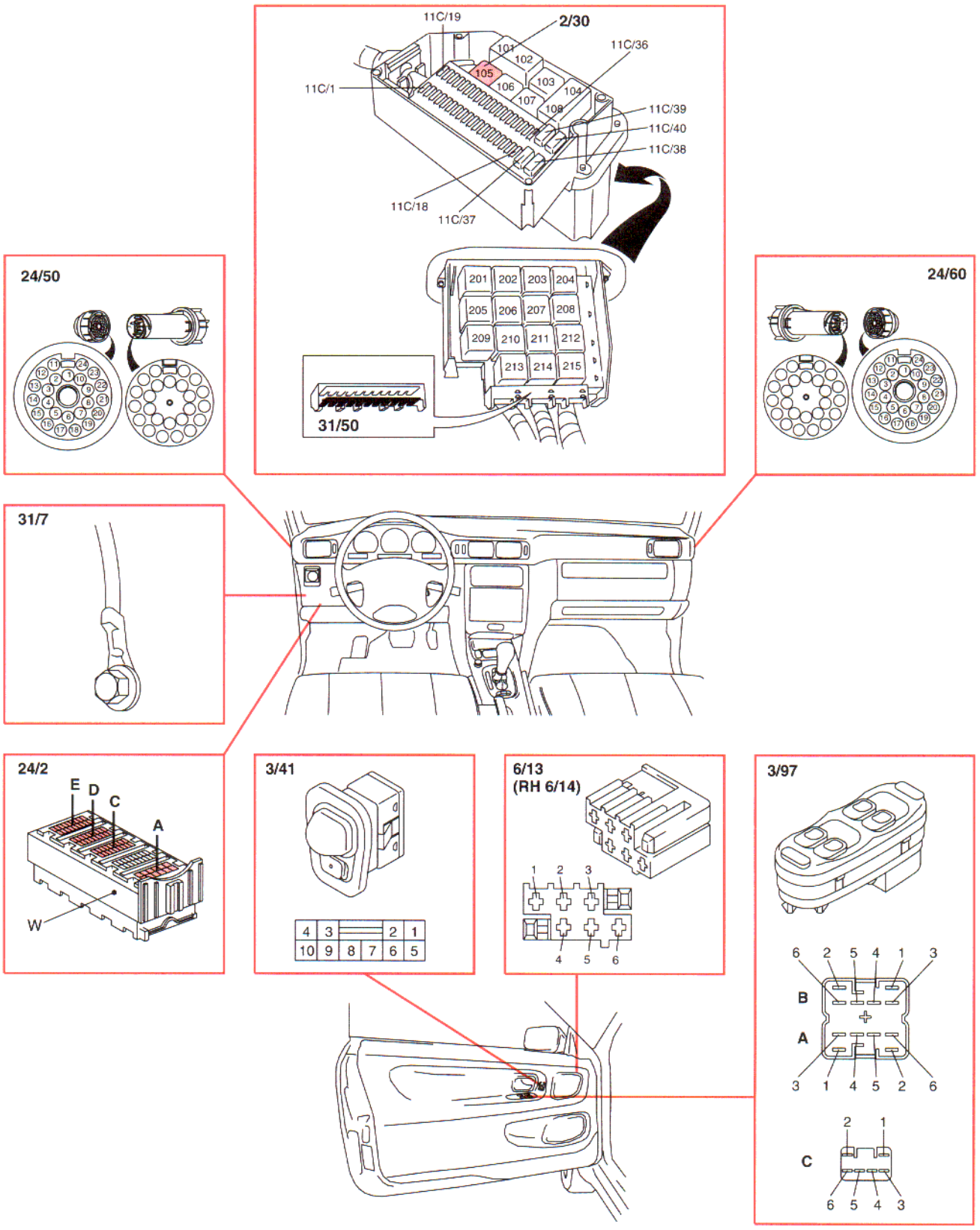
11C/19
2/30
11C/36
101
102
105
106
103
104
107
108
11C/1
11C/39
11C/40
11C/38
11C/18
11C/37
201
202
203
204
205
206
207
208
209
210
211
212
213
214
215
31/50
24/50
24/60
31/7
24/2
E
D
C
A
W
3/41
4
3
2
1
10
9
8
7
6
5
6/13
(RH 6/14)
1
2
3
4
5
6
3/97
6
2
5
4
1
3
B
A
3
1
4
5
2
6
2
1
C
6
5
4
3

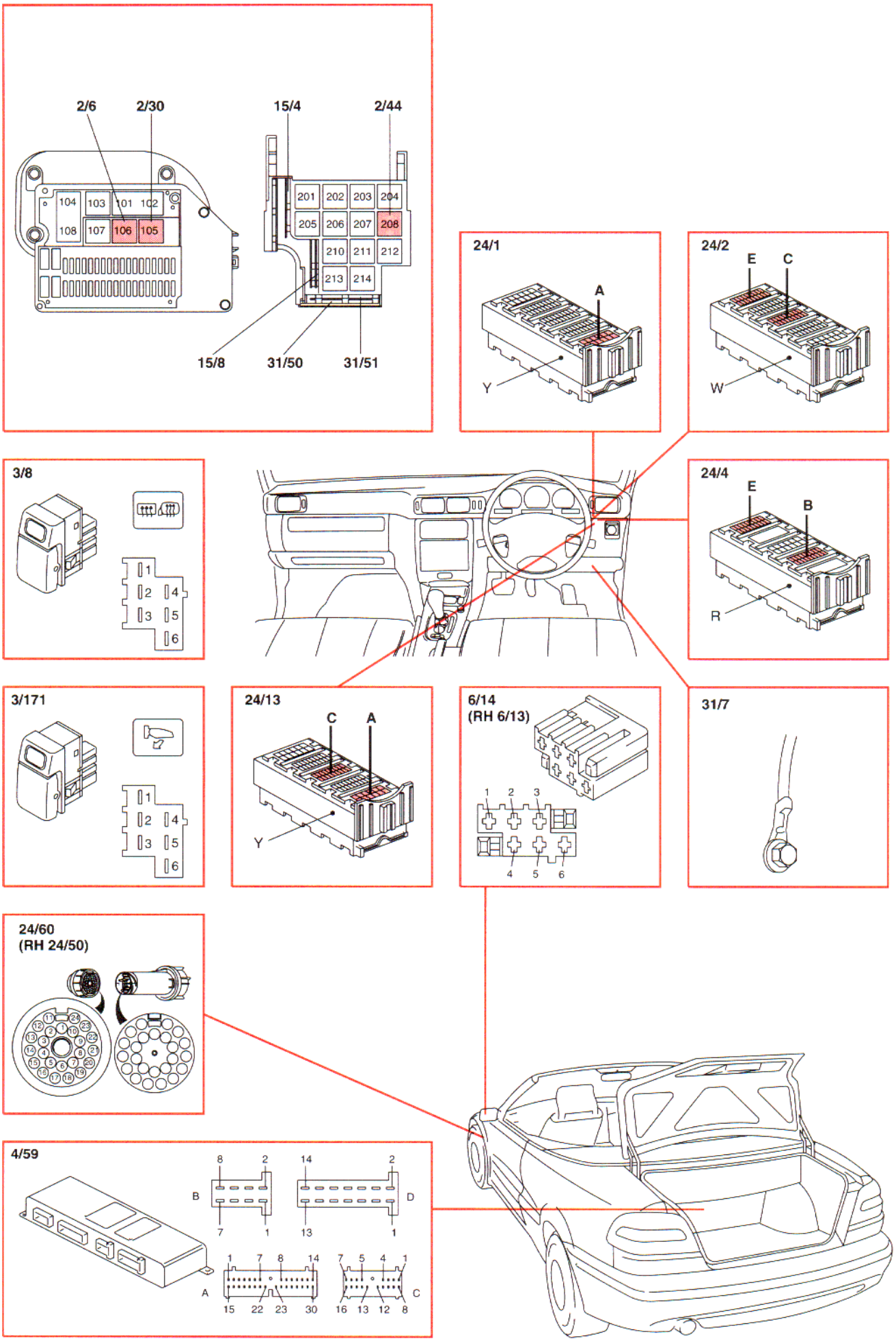
2/6
2/30
15/4
2/44
104
103
101
102
108
107
106
105
201
202
203
204
205
206
207
208
210
211
212
213
214
15/8
31/50
31/51
24/1
A
Y
24/2
E
C
W
3/8
1
2
3
4
5
6
24/4
E
B
R
3/171
1
2
3
4
5
6
24/13
C
A
Y
6/14
(RH 6/13)
1
2
3
4
5
6
31/7
24/60
(RH 24/50)
4/59
8
2
14
2
B
D
7
1
13
1
1
7
8
14
7
5
4
1
A
C
15
22
23
30
16
13
12
8

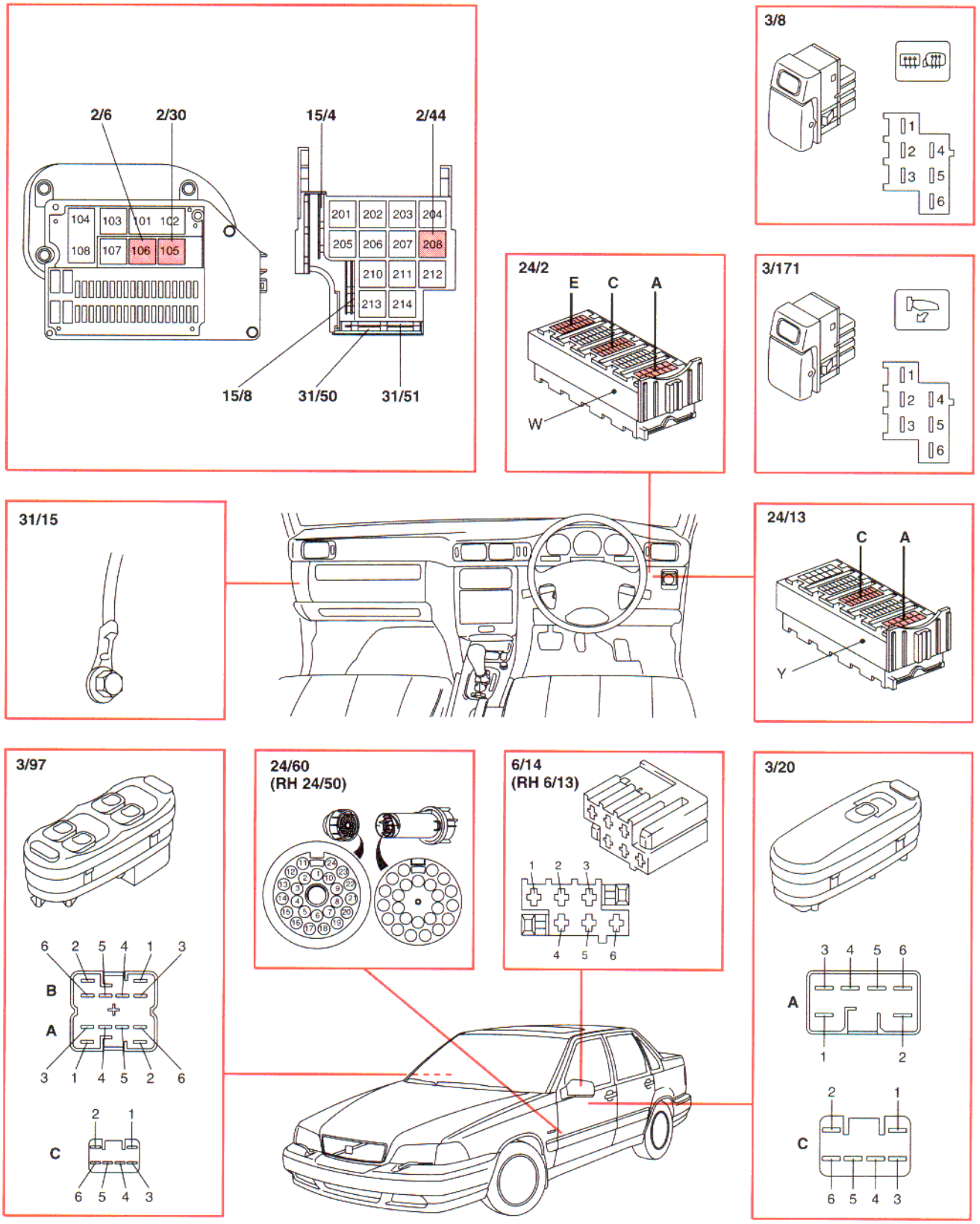
2/6
2/30
15/4
2/44
104
103
101
102
108
107
106
105
201
202
203
204
205
206
207
208
210
211
212
213
214
15/8
31/50
31/51
3/8
1
2
4
3
5
6
24/2
E
C
A
W
3/171
1
2
4
3
5
6
31/15
24/13
C
A
Y
3/97
6
2
5
4
1
3
B
A
3
1
4
5
2
6
C
2
1
6
5
4
3
24/60
(RH 24/50)
6/14
(RH 6/13)
1
2
3
4
5
6
3/20
3
4
5
6
A
1
2
C
2
1
6
5
4
3

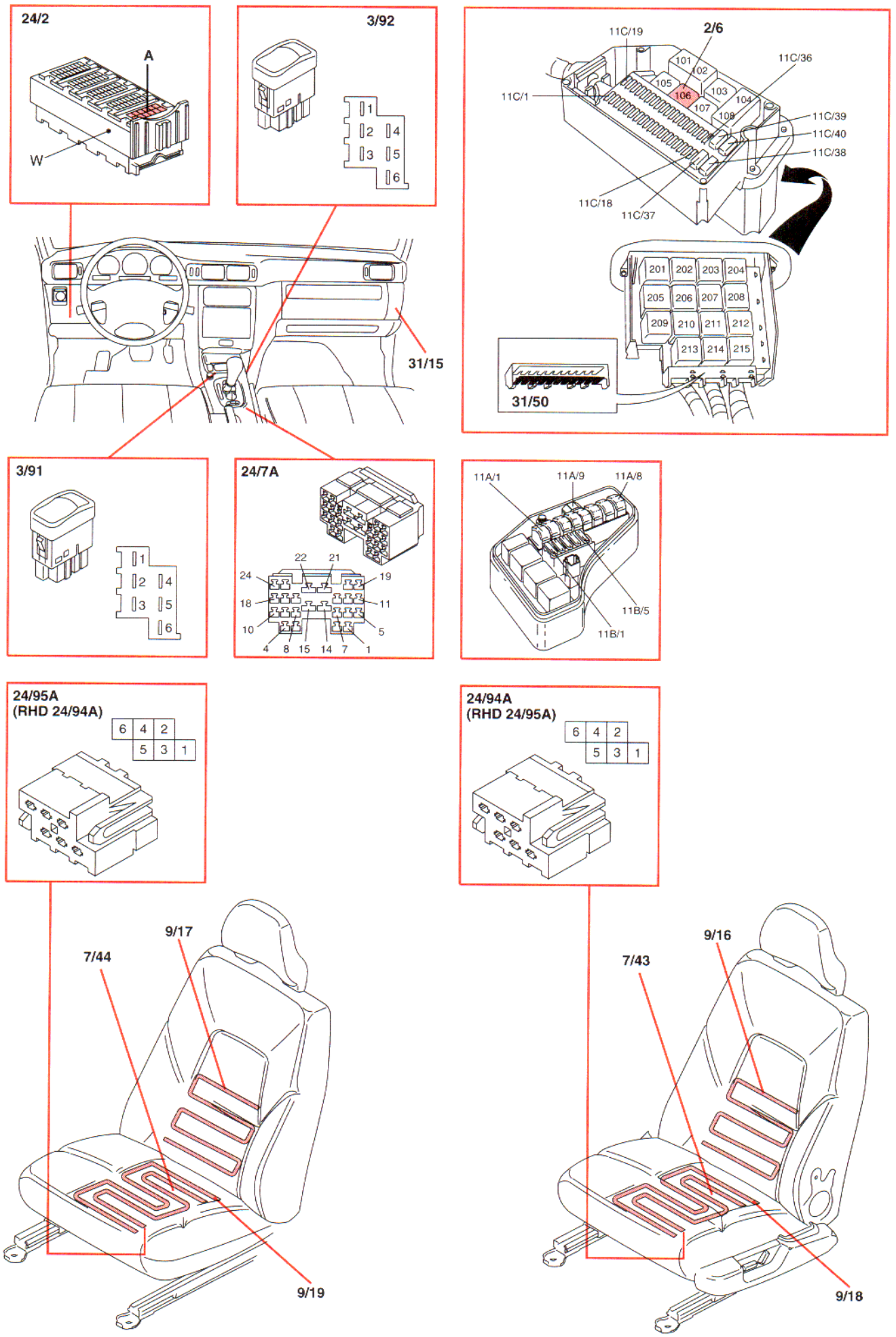
24/2
A
W
3/92
1
2
4
3
5
6
11C/19
2/6
11C/36
101
102
105
106
103
104
107
108
11C/1
11C/39
11C/40
11C/38
11C/18
11C/37
201
202
203
204
205
206
207
208
209
210
211
212
213
214
215
31/50
31/15
3/91
24/7A
22
21
24
19
18
11
10
5
4
8
15
14
7
1
11A/1
11A/9
11A/8
11B/5
11B/1
24/95A
(RHD 24/94A)
6
4
2
5
3
1
24/94A
(RHD 24/95A)
9/17
7/44
9/19
9/16
7/43
9/18

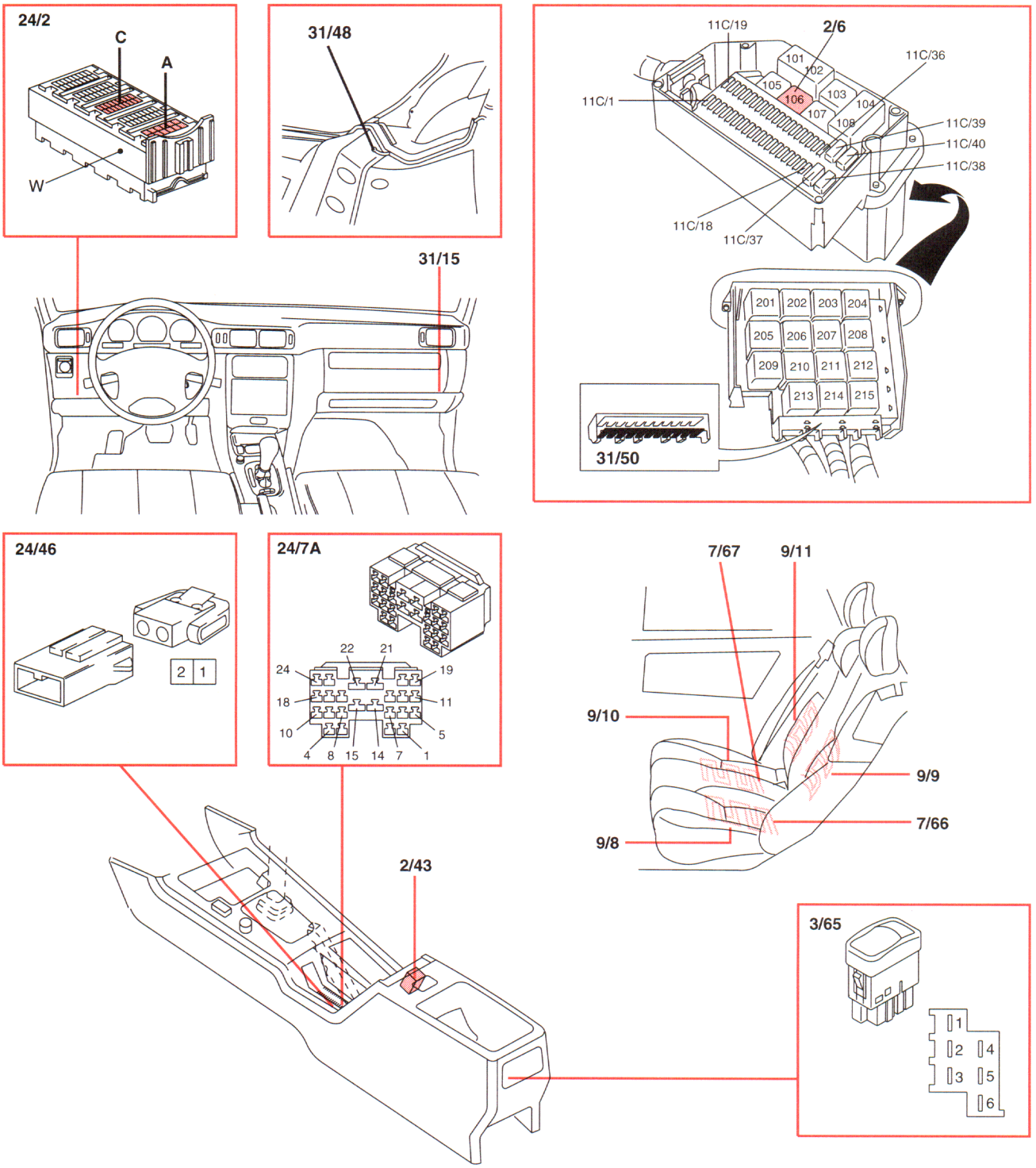
24/2
C
A
W
31/48
31/15
11C/19
2/6
11C/36
101
102
105
106
103
104
107
108
11C/1
11C/39
11C/40
11C/38
11C/18
11C/37
201
202
203
204
205
206
207
208
209
210
211
212
213
214
215
31/50
24/46
2
1
24/7A
22
21
24
19
18
11
10
5
4
8
15
14
7
1
7/67
9/11
9/10
9/9
7/66
9/8
2/43
3/65
1
2
4
3
5
6

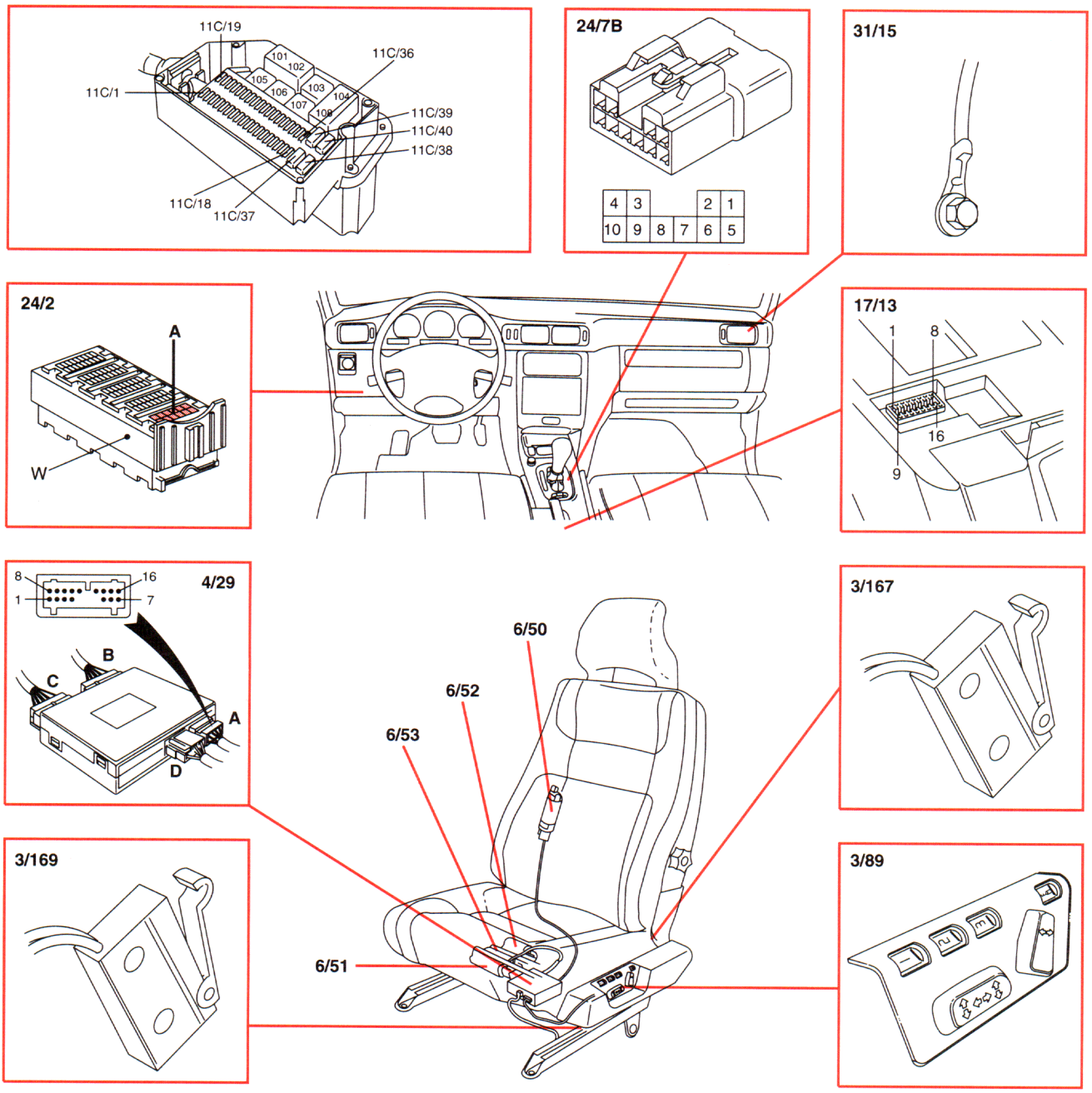
11C/19
11C/36
11C/1
101
102
103
104
105
106
107
108
11C/39
11C/40
11C/38
11C/18
11C/37
24/7B
4 3 2 1
10 9 8 7 6 5
31/15
24/2
A
W
17/13
1
8
16
9
4/29
8
16
1
7
B
C
A
D
6/50
6/52
6/53
6/51
3/167
3/169
3/89

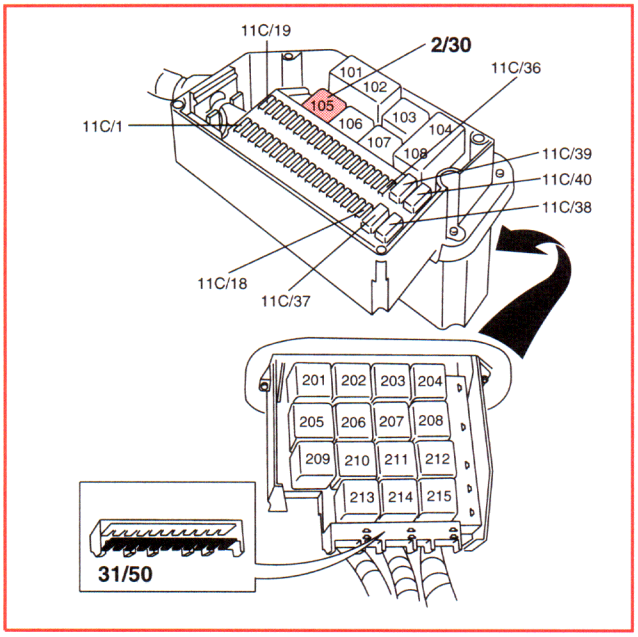
11C/19
2/30
11C/36
101
102
105
106
103
104
107
108
11C/1
11C/39
11C/40
11C/38
11C/18
11C/37
201
202
203
204
205
206
207
208
209
210
211
212
213
214
215
31/50

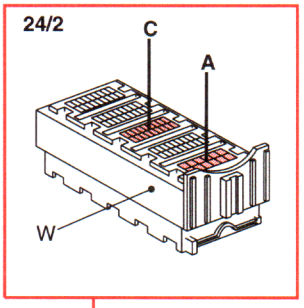
24/2
C
A
W

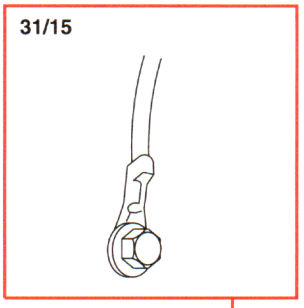
31/15

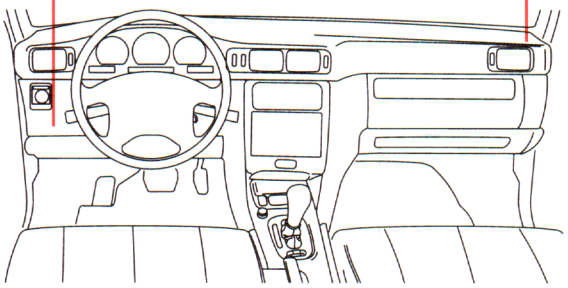

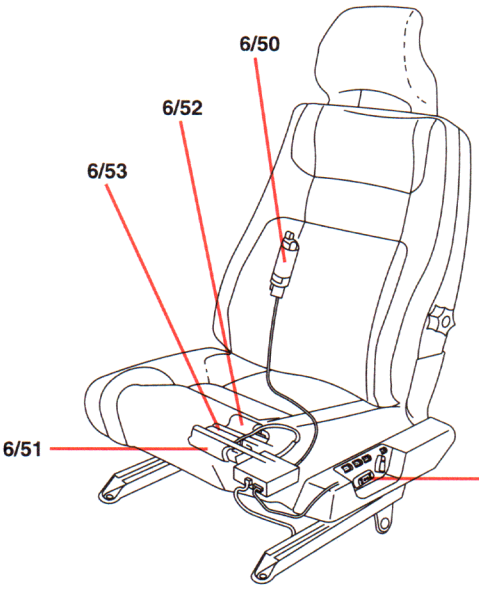
6/50
6/52
6/53
6/51

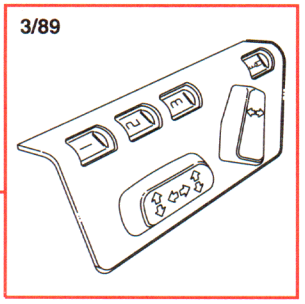
3/89

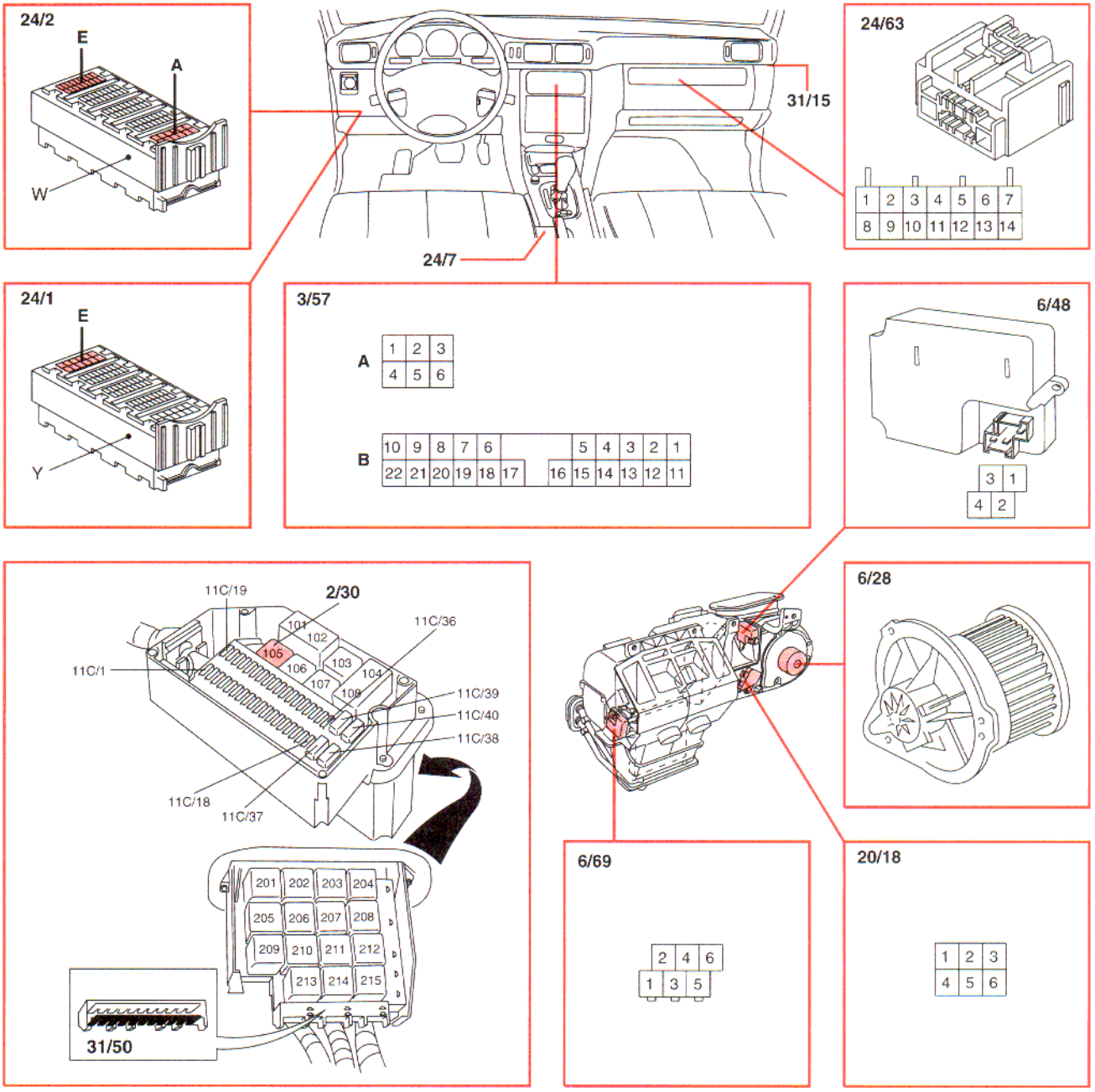
24/2
E
A
W
24/1
E
Y
24/7
31/15
24/63
1 2 3 4 5 6 7
8 9 10 11 12 13 14
3/57
A
1 2 3
4 5 6
B
10 9 8 7 6 5 4 3 2 1
22 21 20 19 18 17 16 15 14 13 12 11
6/48
3 1
4 2
11C/19
2/30
11C/36
101
102
105
106
103
104
107
108
11C/1
11C/39
11C/40
11C/38
11C/18
11C/37
201 202 203 204
205 206 207 208
209 210 211 212
213 214 215
31/50
6/28
6/69
2 4 6
1 3 5
20/18
1 2 3
4 5 6

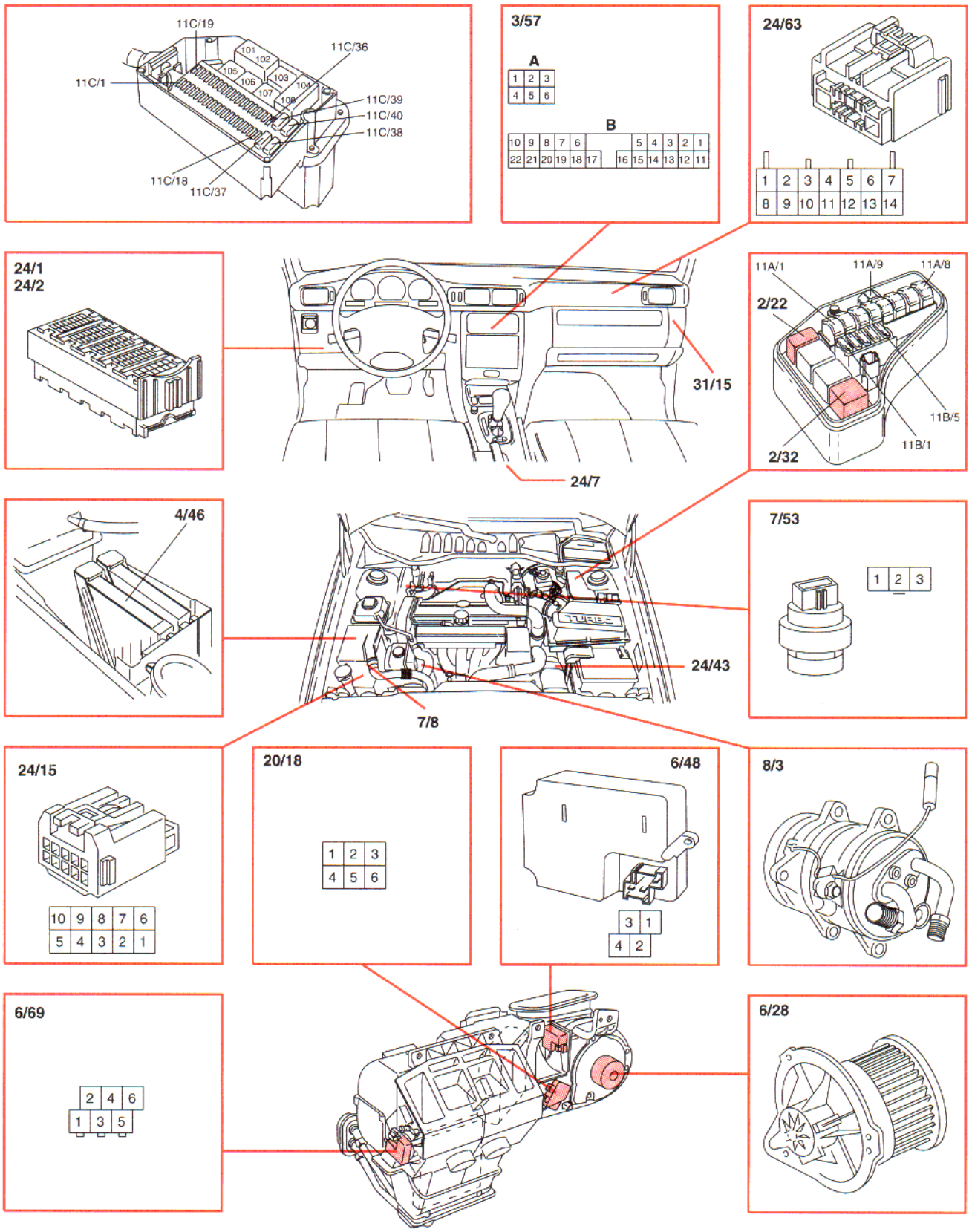
11C/19
11C/36
11C/1
101
102
103
104
105
106
107
108
11C/39
11C/40
11C/38
11C/18
11C/37
3/57
A
1 2 3
4 5 6
B
10 9 8 7 6 5 4 3 2 1
22 21 20 19 18 17 16 15 14 13 12 11
24/63
1 2 3 4 5 6 7
8 9 10 11 12 13 14
24/1
24/2
31/15
24/7
11A/1
11A/9
11A/8
2/22
11B/5
11B/1
2/32
4/46
24/43
7/8
7/53
1 2 3
24/15
10 9 8 7 6
5 4 3 2 1
20/18
1 2 3
4 5 6
6/48
3 1
4 2
8/3
6/69
2 4 6
1 3 5
6/28

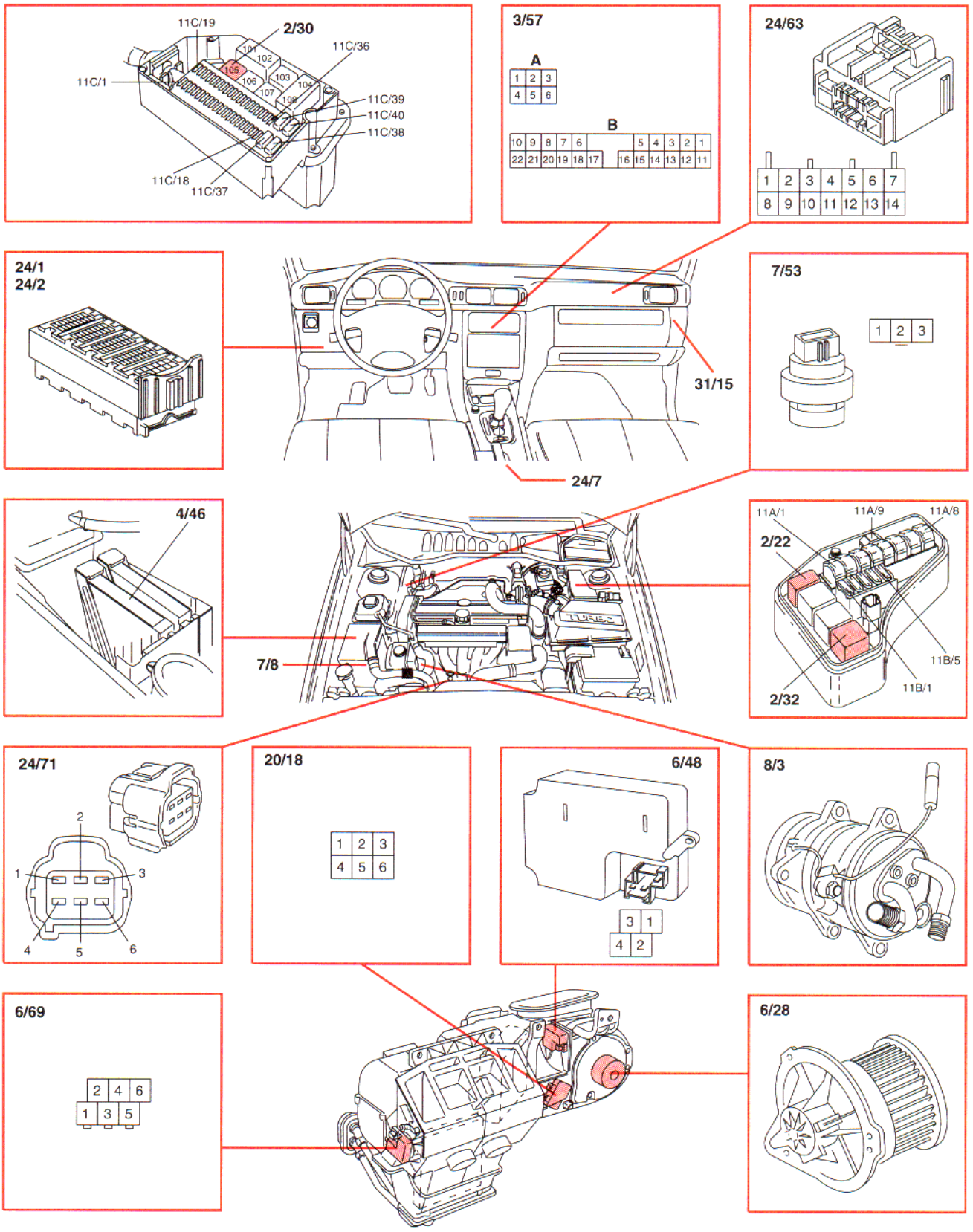
2/30
11C/19
11C/36
11C/1
11C/39
11C/40
11C/38
11C/18
11C/37
101
102
103
104
105
106
107
108
3/57
A
1 2 3
4 5 6
B
10 9 8 7 6 5 4 3 2 1
22 21 20 19 18 17 16 15 14 13 12 11
24/63
1 2 3 4 5 6 7
8 9 10 11 12 13 14
24/1
24/2
31/15
24/7
7/53
1 2 3
4/46
7/8
11A/1
11A/9
11A/8
2/22
11B/5
11B/1
2/32
24/71
1
2
3
4
5
6
20/18
1 2 3
4 5 6
6/48
3 1
4 2
8/3
6/69
2 4 6
1 3 5
6/28

Electronic climate control ECC
Fenix 5.2, MSA 15.7

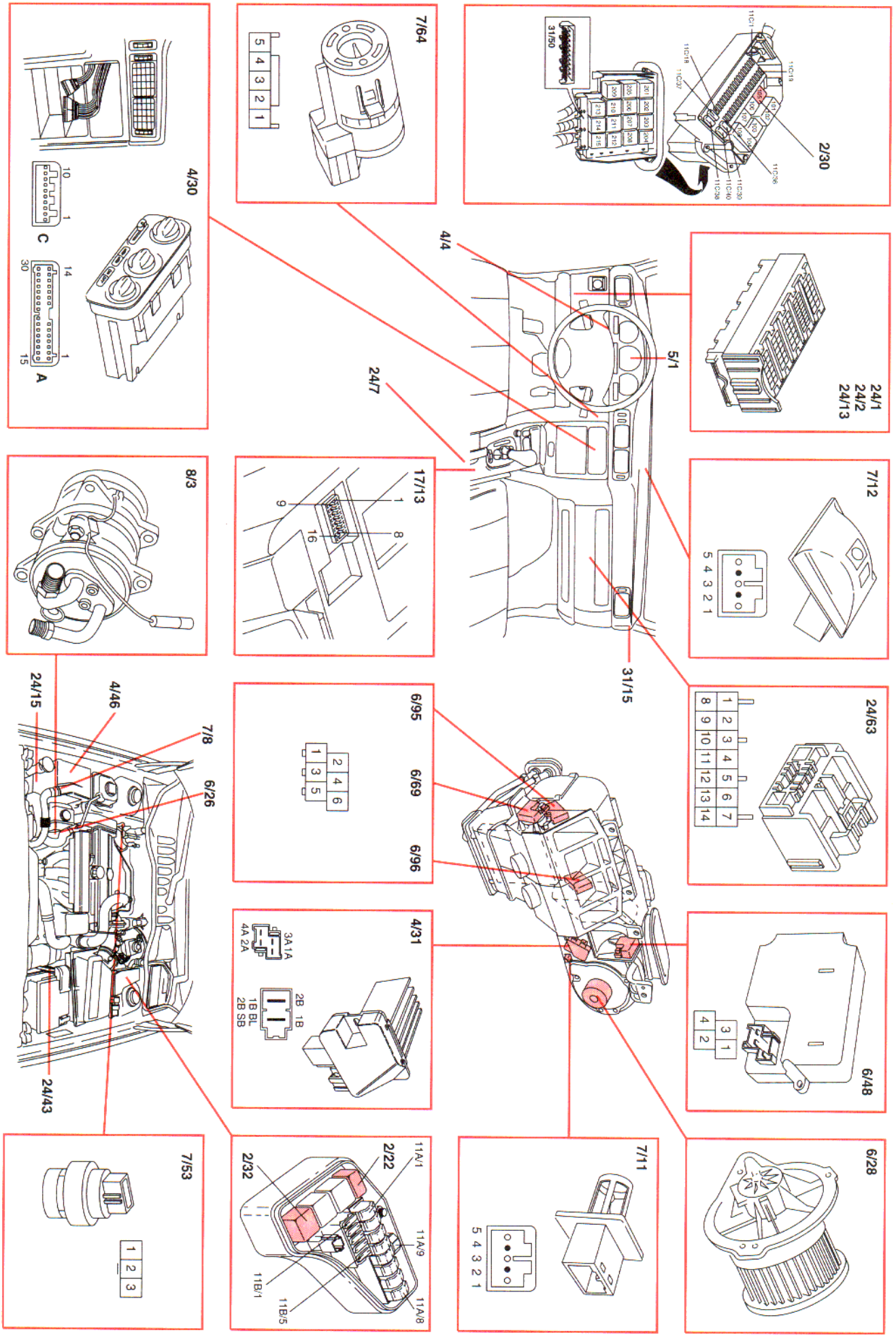

Electronic climate control ECC
Denso, ME7

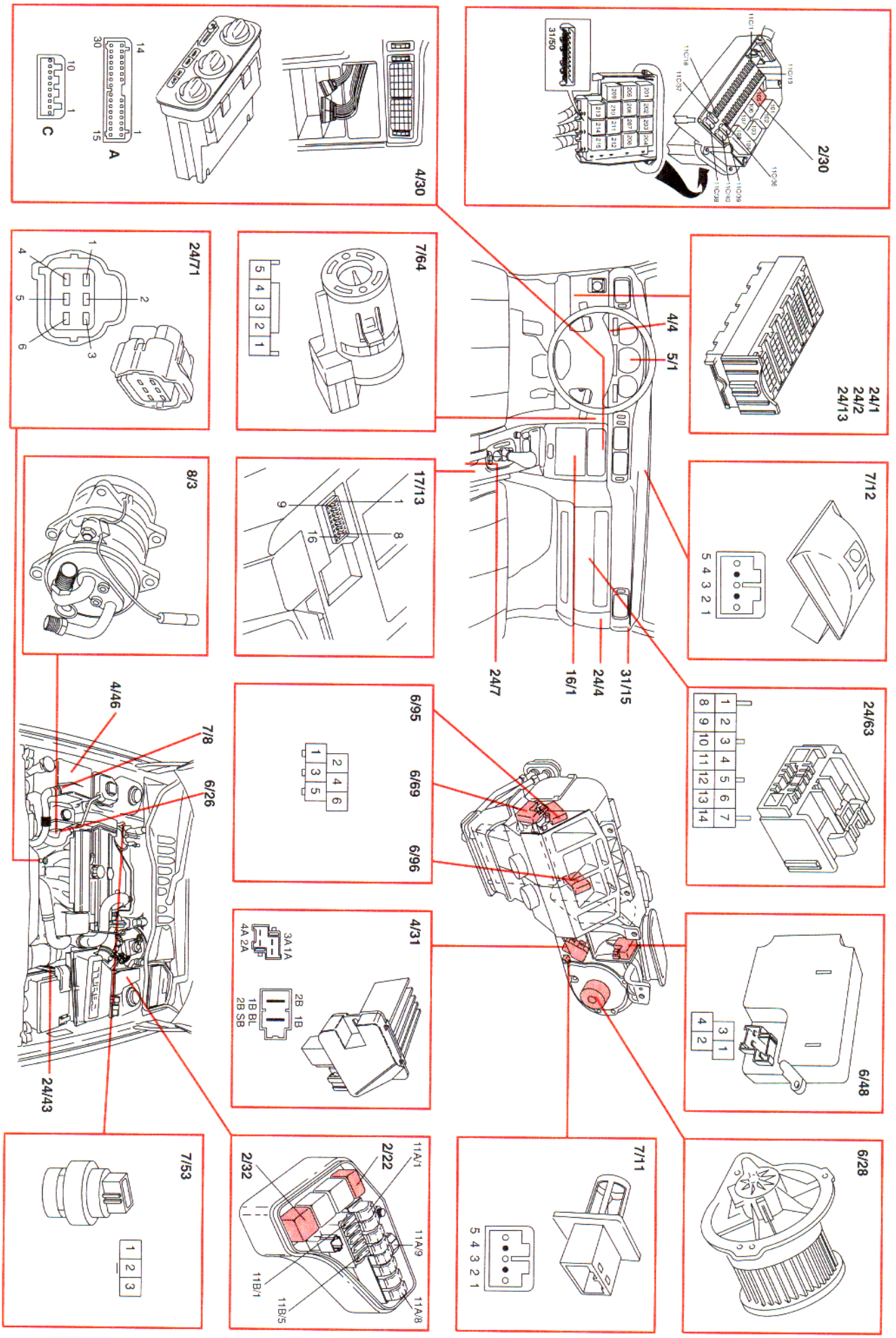

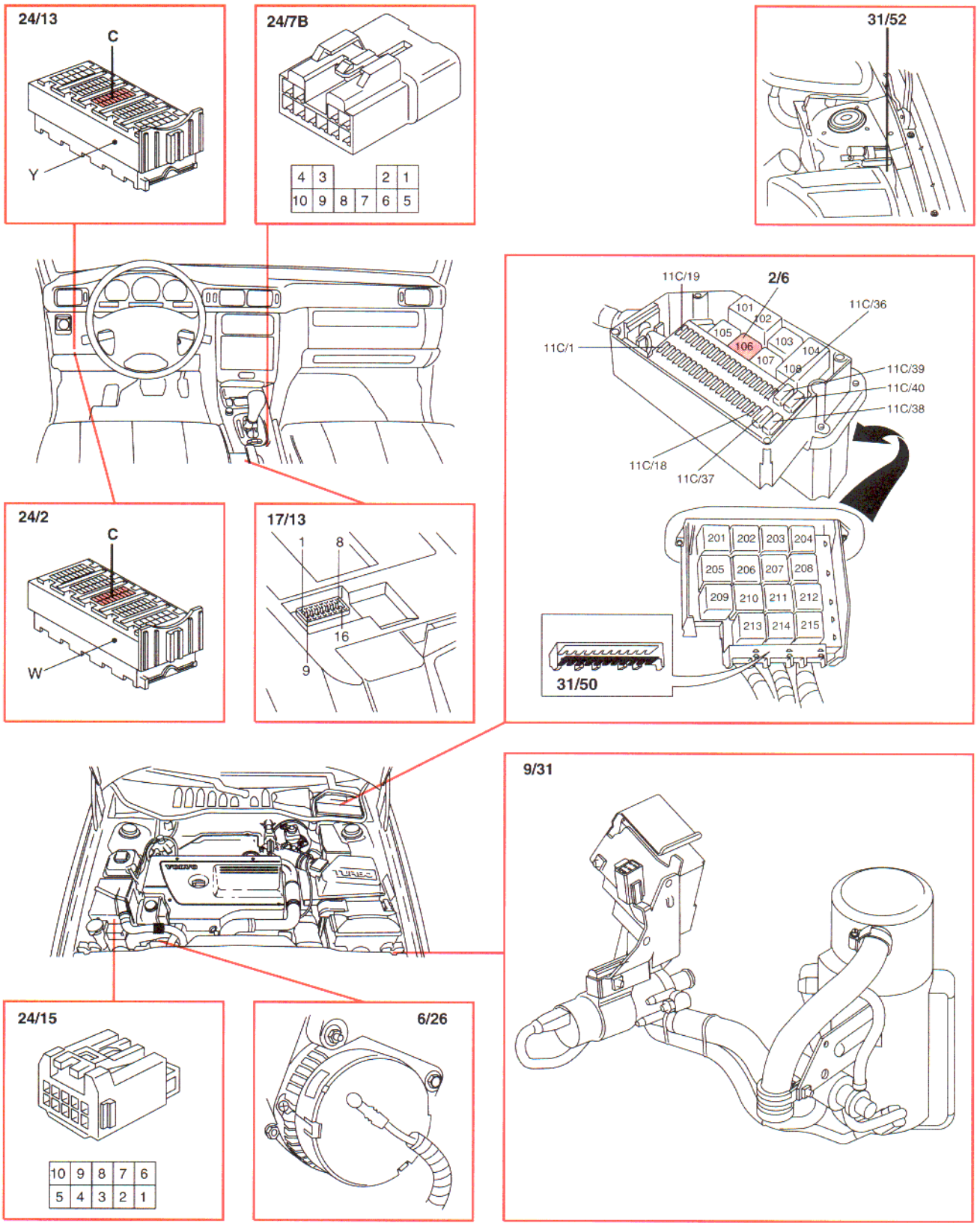
24/13
C
Y
24/7B
4 3 2 1
10 9 8 7 6 5
31/52
11C/19
2/6
11C/36
11C/1
101 102 103 104 105 106 107 108
11C/39
11C/40
11C/38
11C/18
11C/37
201 202 203 204
205 206 207 208
209 210 211 212
213 214 215
31/50
24/2
C
W
17/13
1
8
16
9
9/31
24/15
10 9 8 7 6
5 4 3 2 1
6/26

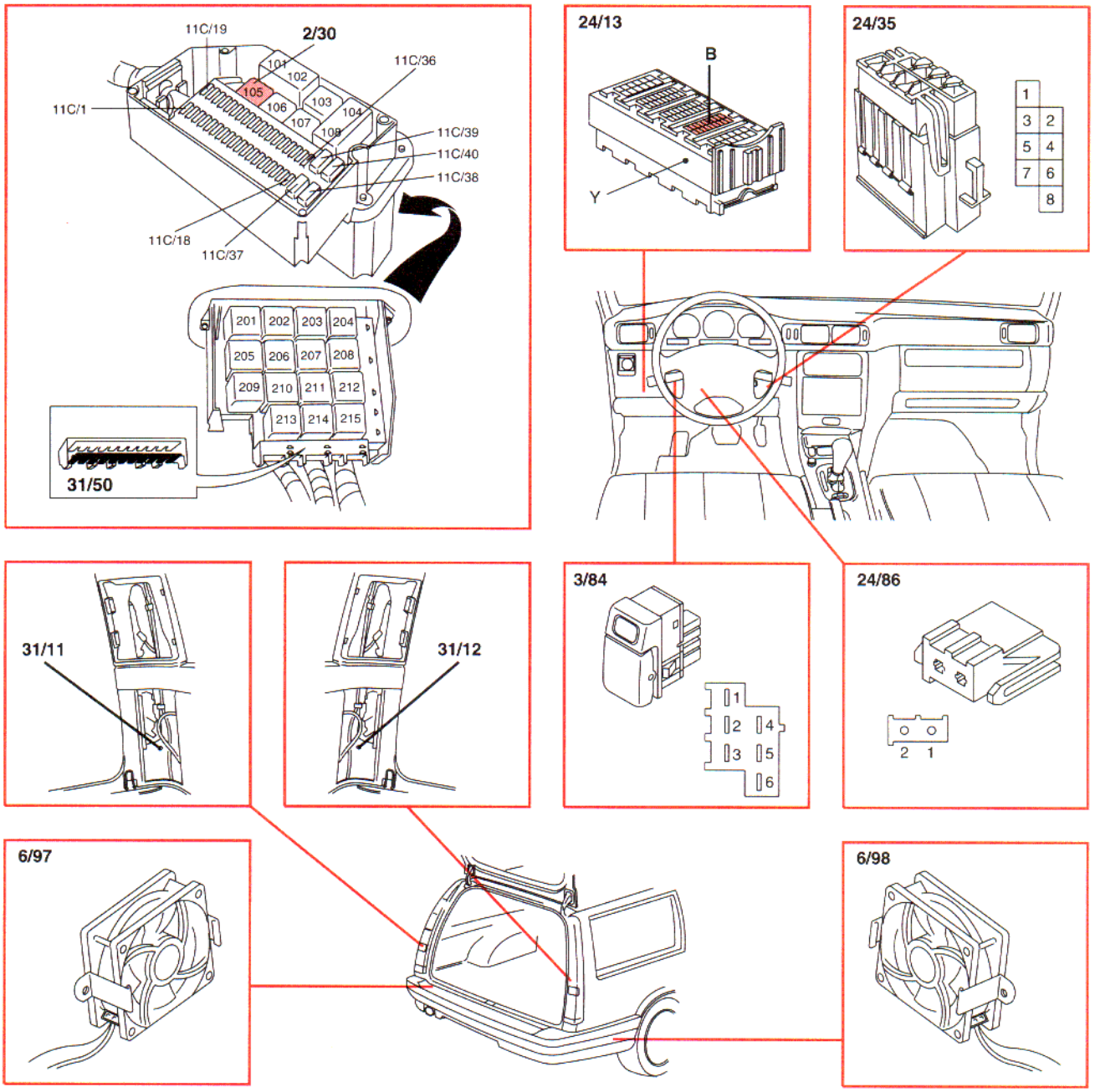
11C/19
2/30
11C/36
11C/1
101
102
103
104
105
106
107
108
11C/39
11C/40
11C/38
11C/18
11C/37
201
202
203
204
205
206
207
208
209
210
211
212
213
214
215
31/50
24/13
B
Y
24/35
1
3
2
5
4
7
6
8
31/11
31/12
3/84
1
2
4
3
5
6
24/86
2
1
6/97
6/98

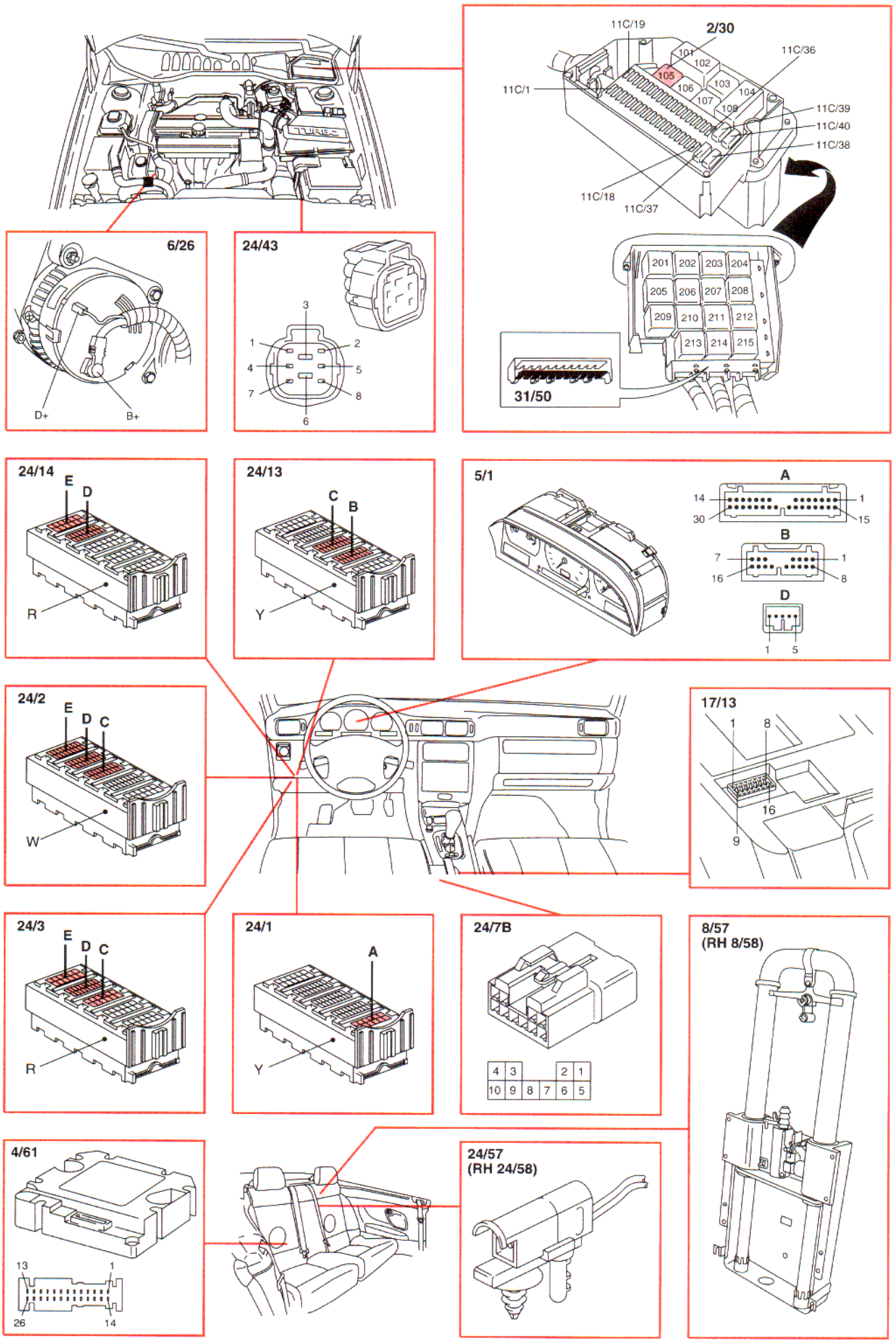
2/30
11C/19
11C/36
11C/1
11C/39
11C/40
11C/38
11C/18
11C/37
101
102
103
104
105
106
107
108
201
202
203
204
205
206
207
208
209
210
211
212
213
214
215
31/50
6/26
D+
B+
24/43
1
2
3
4
5
6
7
8
24/14
E
D
R
24/13
C
B
Y
5/1
A
14
1
30
15
B
7
1
16
8
D
1
5
24/2
E
D
C
W
17/13
1
8
16
9
24/3
E
D
C
R
24/1
A
Y
24/7B
4
3
2
1
10
9
8
7
6
5
8/57
(RH 8/58)
4/61
13
1
26
14
24/57
(RH 24/58)

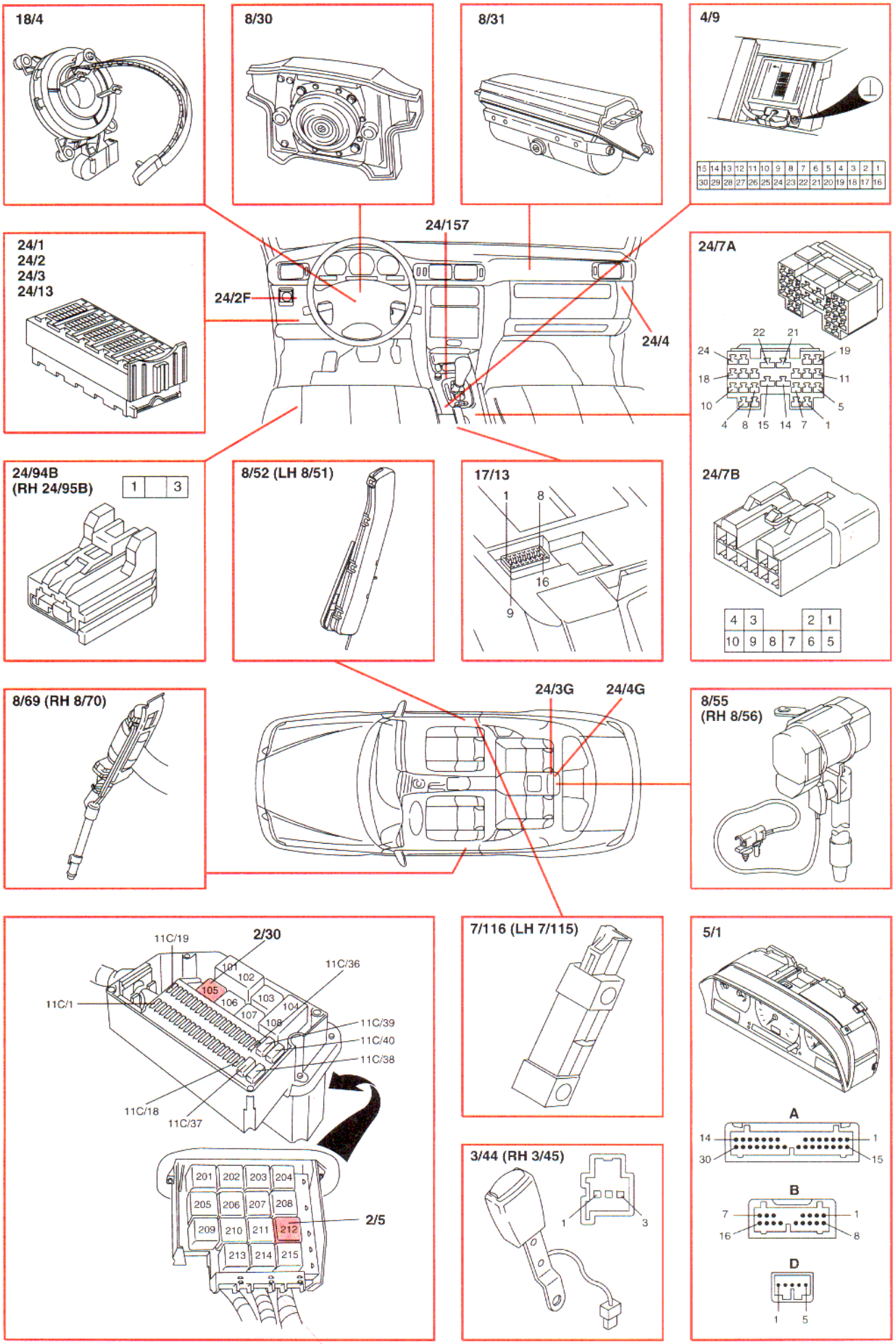
18/4
8/30
8/31
4/9
15 14 13 12 11 10 9 8 7 6 5 4 3 2 1
30 29 28 27 26 25 24 23 22 21 20 19 18 17 16
24/157
24/1
24/2
24/3
24/13
24/2F
24/4
24/7A
22 21
24 19
18 11
10 5
4 8 15 14 7 1
24/94B
(RH 24/95B)
1 3
8/52 (LH 8/51)
17/13
1 8
16
9
24/7B
4 3 2 1
10 9 8 7 6 5
8/69 (RH 8/70)
24/3G
24/4G
8/55
(RH 8/56)
11C/19
2/30
11C/36
101
102
105
106
103
104
107
108
11C/1
11C/39
11C/40
11C/38
11C/18
11C/37
201 202 203 204
205 206 207 208
209 210 211 212
213 214 215
2/5
7/116 (LH 7/115)
5/1
A
14 1
30 15
B
7 1
16 8
D
1 5
3/44 (RH 3/45)
1 3

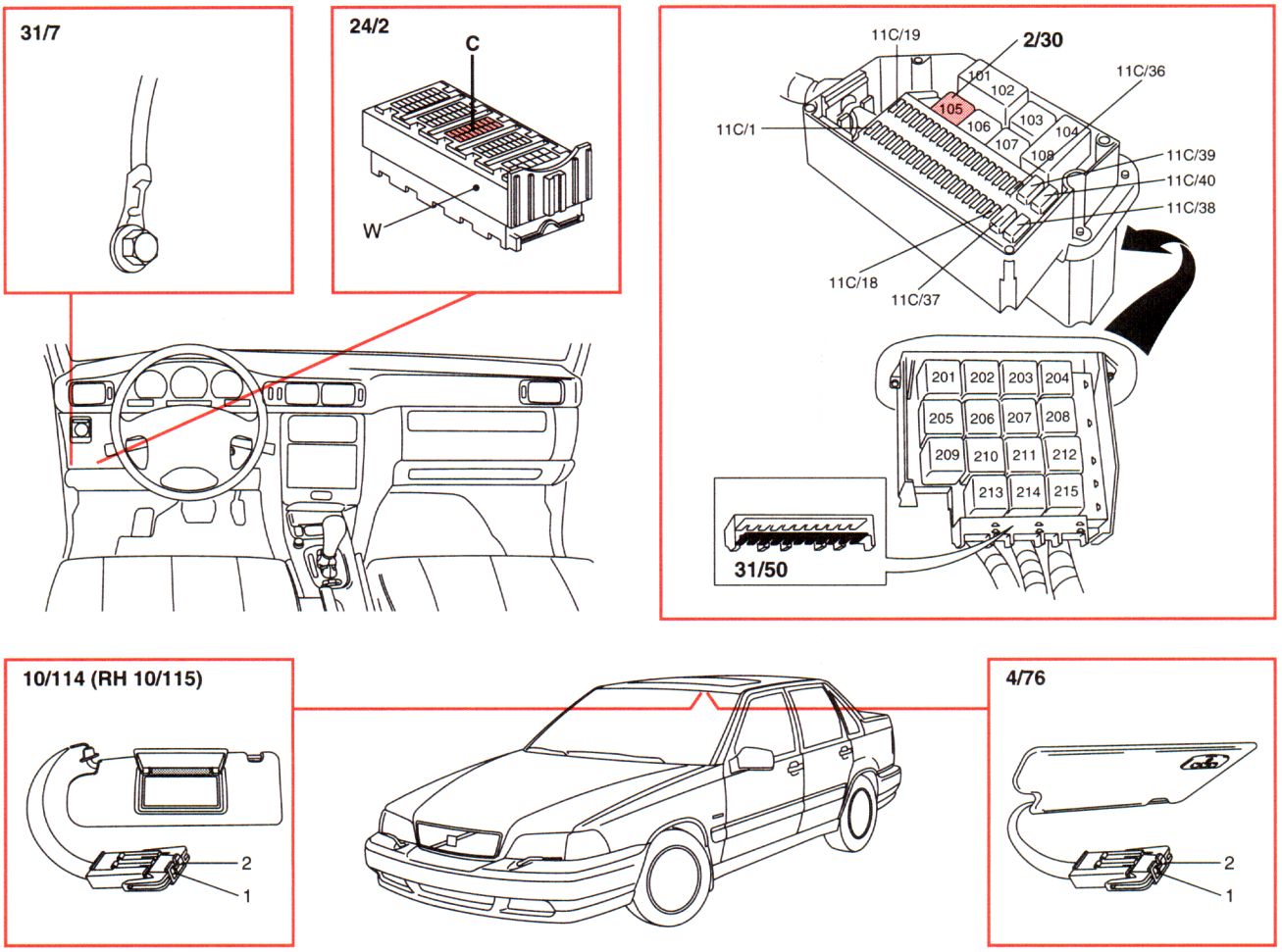
31/7
24/2
C
W
11C/19
2/30
11C/36
101
102
105
106
103
104
107
108
11C/1
11C/39
11C/40
11C/38
11C/18
11C/37
201
202
203
204
205
206
207
208
209
210
211
212
213
214
215
31/50
10/114 (RH 10/115)
2
1
4/76
2
1

Rear view mirror with automatic dimming
C70 Convertible

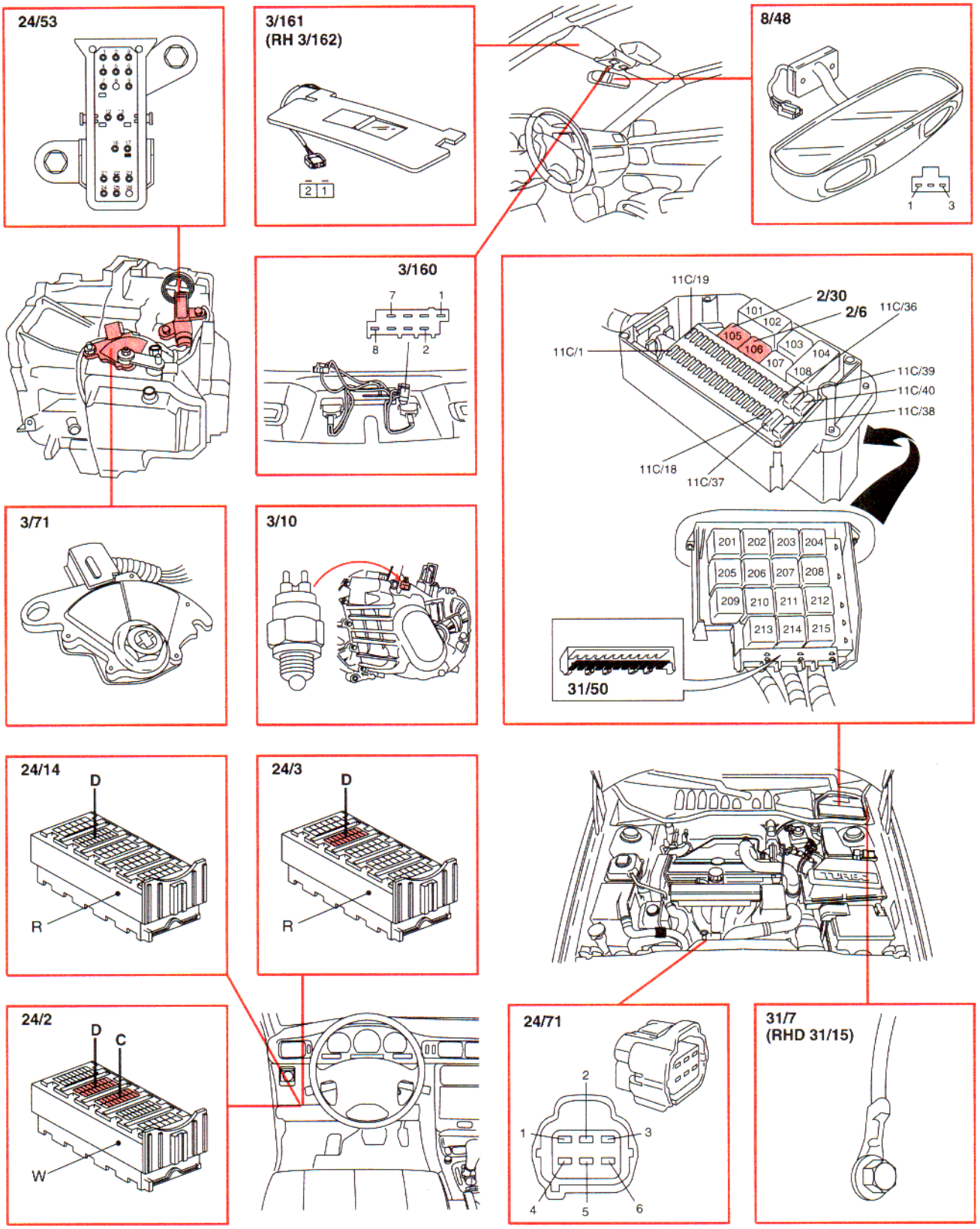

Rear view mirror with automatic dimming
C70 coupé